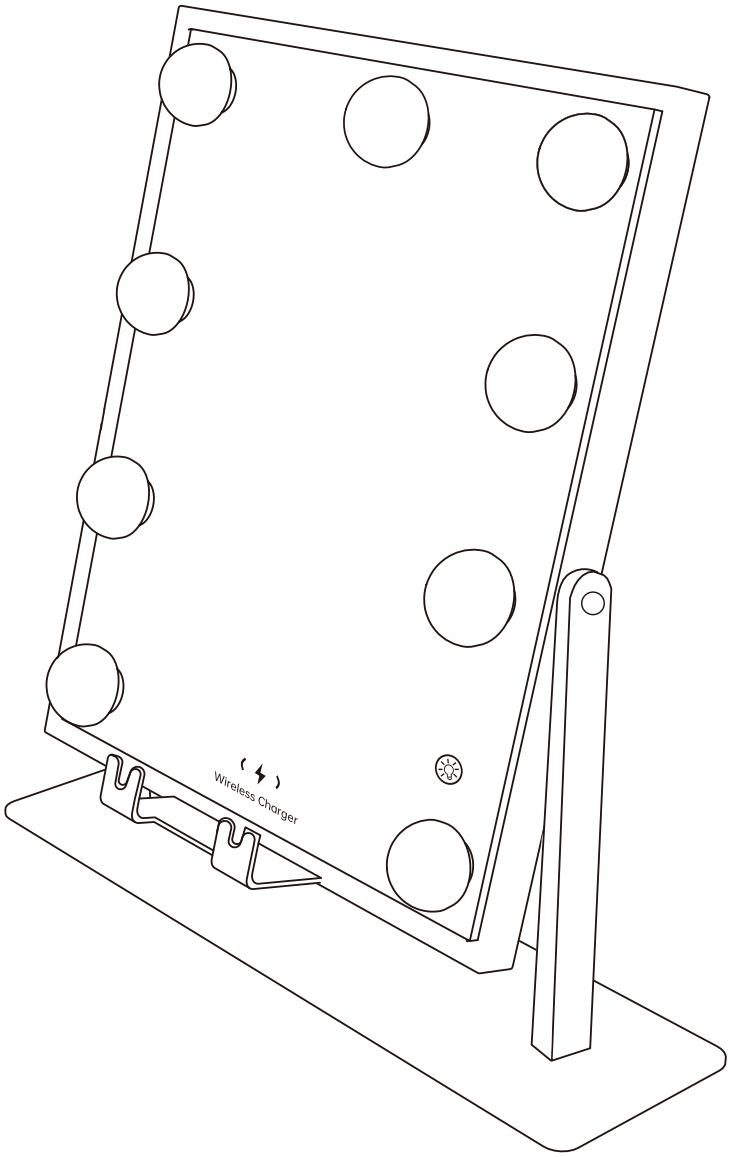

INSTRUCTION MANUAL

LED Hollywood Style Vanity Mirror

Before You Start

⚠ Please read all instructions carefully.

⚠ Retain instructions for future reference.

⚠ Separate and count all parts and hardware.

⚠ Read through each step carefully and follow the proper order.

⚠ We recommend that, where possible, all items are assembled near to the area in which they will be placed in use, to avoid moving the product unnecessarily once assembled.

⚠ Always place the product on a flat, steady and stable surface.

⚠ Keep all small parts and packaging materials for this product away from babies and children as they potentially pose a serious choking hazard.

MAIN DIAGRAM

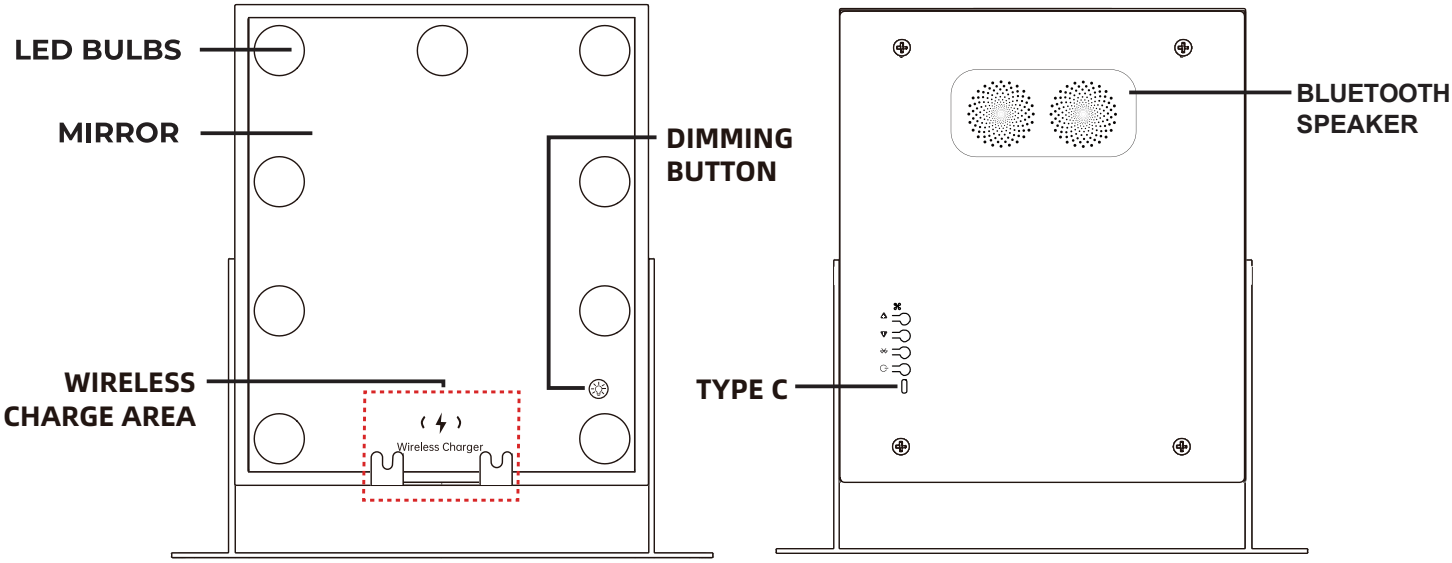

BUTTON CONTROLS

Short press to turn on/off the light, change the light color
Long press to adjust the brightness

Press once to change next song, long press it to increase the volume.

Press once to change last song, long press it to reduce the volume.

Long press this button to active bluetooth mode.
Short press to answer phone calling, speak directly to mirror by built-in microphone.

Short press to turn on/ off the light.

Bluetooth Name: music mirror

Product Size

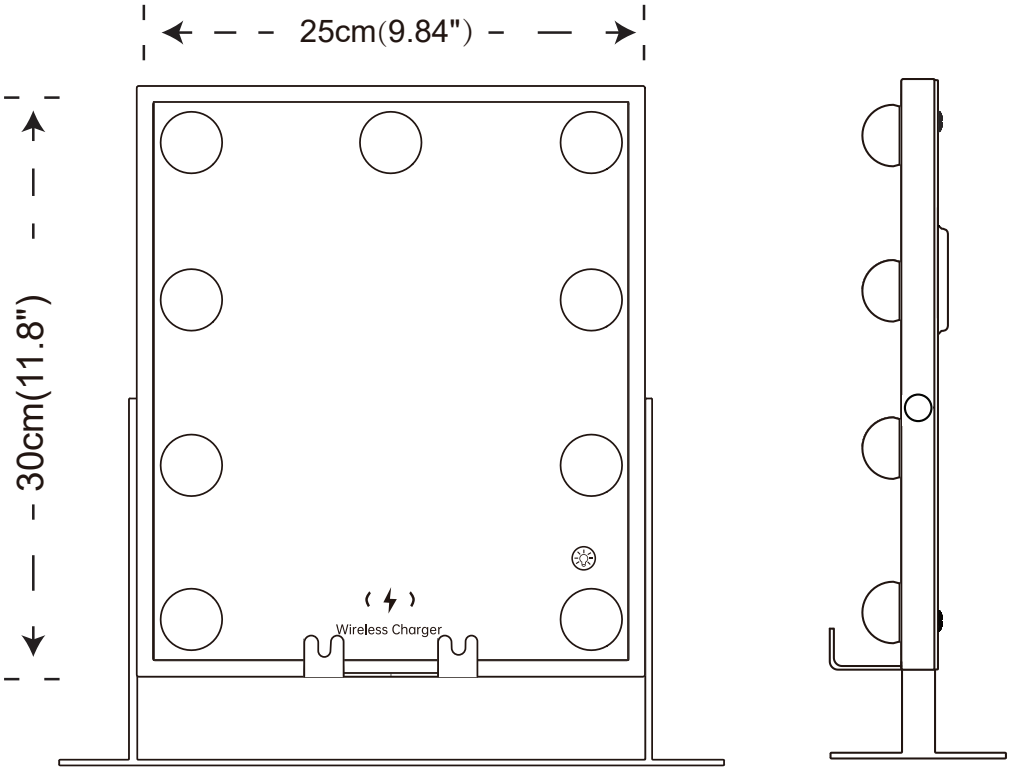

Contained items

USB charger

Built-in 18250 rechargeable battery: 1200mAh

Remark: The mirror can be used to control lights + Bluetooth function when fully charged.
Wireless charging must be used when plugged in.

This device complies with Part 15 of the FCC Rules. Operation is subject to the following two conditions: (1) this device may not cause harmful interference, and (2) this device must accept any interference received, including interference that may cause undesired operation.

Changes or modifications to this unit not expressly approved by the party responsible for compliance could void the user's authority to operate the equipment.

NOTE: This equipment has been tested and found to comply with the limits for a Class B digital device, pursuant to Part 15 of the FCC Rules. These limits are designed to provide reasonable protection against harmful interference in a residential installation. This equipment generates, uses and can radiate radio frequency energy and, if not installed and used in accordance with the instructions, may cause harmful interference to radio communications. However, there is no guarantee that interference will not occur in a particular installation. If this equipment does cause harmful interference to radio or television reception, which can be determined by turning the equipment off and on, the user is encouraged to try to correct the interference by one or more of the following measures:

-- Reorient or relocate the receiving antenna.
-- Increase the separation between the equipment and receiver.
-- Connect the equipment into an outlet on a circuit different from that to which the receiver is connected.
-- Consult the dealer or an experienced radio/TV technician for help.

This device and its antenna(s) must not be co-located or operation in conjunction with any other antenna or transmitter.

RF Exposure for WPT

The equipment complies with FCC radiation exposure limits set forth for an uncontrolled environment. During the operation of device a distance 15cm surrounding the device and 20cm above the top surface of the device must be respected when using the wireless charge function.

RF Exposure for BT

To maintain compliance with FCC's RF Exposure guidelines, This equipment should be installed and operated with minimum distance of 10mm from your body when using the Bluetooth function..