Product Name:	POWER BANK
Product Model No.:	HRP-10KW
Test Auxiliary:	Phone
Auxiliary Model No.:	ZKT-01
Transmitting mode	Keep the EUT in continuously wireless charging mode
Power supply:	Input: USB-C: 5V/3A, 9V/2A, 12V/1.5A Output: USB-A: 4.5V/5A, 5V/3A, 5V/4.5A, 9V/2A, 12V/1.5A USB-C: 5V/3A, 9V/2.22A, 12V/1.67A USB-A 22.5W (Max) Wireless : 15W (Max) Battery Capacity: 3.7V, 10000mAh, 37Wh
Test Description:	Phone Battery>98%, =50%and <1% are tested, and the worst is <1%.

Test Modes:		
Mode 1	Battery (3.7V) + EUT + Phone to USB-A	
Mode 2	Battery (3.7V) + EUT + Phone to USB-C	
Mode 3	Battery (3.7V) + EUT + Phone to Wireless	Record
Mode 4	Battery (3.7V) + EUT + Phone to USB-A + Phone to Wireless	
Mode 5	Battery (3.7V) + EUT + Phone to USB-C + Phone to Wireless	
Mode 6	Battery (3.7V) + EUT + Phone to USB-C + Phone to USB-A + Phone to Wireless	
Note: All test modes were pre-tested, but we only recorded the worst case in this report.		

RF Exposure Evaluation

1 Measuring Standard

KDB 680106 RF Exposure Wireless Charging Apps v03r01

2 Requirements

According to the item 5 of KDB 680106 v03r01:

Inductive wireless power transfer applications that meet all of the following requirements are excluded from submitting an RF exposure evaluation.

a) Power transfer frequency is less that 1 MHz

Yes.The device operates in the frequency115KHz-205KHz

b) Output power from each primary coil is less than or equal to 15watts.

Yes,The maximum output power of the primary coil is Max 5W≤15W.

c) The transfer system includes onle single primary and secondary coils.This includes charging systems that may have multiple primary coils and clients that are able to detect and allow coupling only between individual pairs of coils.

Yes. The transfer system including a charging system with only single primary coils is to detect and allow only between individual of coils

d) Client device is placed directly in contact with the transmitter

Yes. Client device is placed directly in contact with the transmitter

e) Mobile exposure conditions only (portable exposure conditions are not covered by this exclusion)

No. The EUT has portable exposure condition.

f) The aggregate H-Field strengths at 15 cm surrounding the device and 20 cm above the top surface form all simultaneous transmitting coils are demonstrated to be less than 50% of the MPE limit

No. More than 50% of the MPE limit.

Limits

The criteria listed in the following table shall be used to evaluate the environment impact of human exposure to radio frequency (RF) radiation as specified in 1.1307(b)

Limits for Maximum Permissible Exposure (MPE)

Frequency range (MHz)	Electric field strength (V/m)	Magnetic field strength (A/m)	Power density (mW/cm^2)	Averaging time (minutes)
(A) Limits for Occupational/Controlled Exposures				
0.3-3.0	614	1.63	*(100)	6
3.0-30	1842/f	4.89/f	*(900/f^2)	6
30-300	61.4	0.163	1.0	6
300-1500	/	/	f/300	6
1500-100,000	/	/	5	6
(B) Limits for General Population/Uncontrolled Exposure				
0.3-1.34	614	1.63	*(100)	30
1.34-30	824/f	2.19/f	*(180/f^2)	30
30-300	27.5	0.073	0.2	30
300-1500	/	/	f/1500	30
1500-100,000	/	/	1.0	30

F=frequency in MHz
*=Plane-wave equivalent power density
RF exposure compliance will need to be determined with respect to 1.1307(c) and (d) of the FCC rules. The emissions should be within the limits at 300kHz in Table 1 of 1.1310(use the 300kHz limits for 150kHz:614V/m,1.63A/m).

3 Test Setup

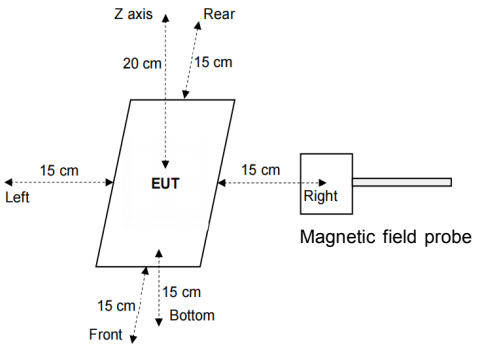

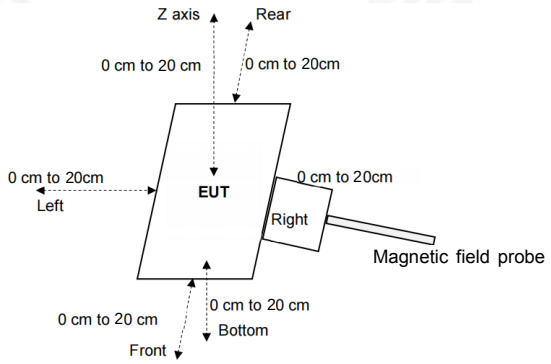

Note: Measurements should be made from all sides and the top of the primary/client pair, with the 20 cm-0cm measured from the center of the top, and 20cm-0cm measured from the center of the rest

For mobile exposure conditions:

a. The RF exposure test was performed in anechoic chamber

b. E and H-field measurements should be made with the center of the probe at a distance of 15 cm surrounding the EUT and 20 cm above the top surface of the primarv/client pair

c. The highest emission level was recorded and compared with limit

d. The EUT was measured according to the dictates of KDB680106 v03r01

For portable exposure conditions:

a. The RF exposure test was performed in anechoic chamber

b. E and H-field measurements should be made with the probe at O cmfor all side of the EUT.

c. The highest emission level was recorded and compared with limit.

For portable exposure conditions:

Perform H-field measurements for each edge/top surface of the host/client pair at every 2 cmstartino from as close as possible out to 20cm

4 Test Procedure

1) The RF exposure test was performed on 360 degree turn table in anechoic chamber.

2) 20 cm-0cm measured from the center of the top, and 20cm-0cm measured from the center of the rest sides.

3) The turn table was rotated 360d degree to search of highest strength.

4) The highest emission level was recorded and compared with limit as soon as measurement of each points were completed.

5) The EUT were measured according to the dictates of "2022.04 TCBC WORKSHOP 4.1 Part 18 & Wireless Power Transfer".

5 Test Instruments list

Test Equipment	Manufacturer	Model No.	SN.	Cal.Date (mm-dd-yy)	Cal.Due date (mm-dd-yy)
Exposure Level Tester	Narda	ELT-400	0-0344	Oct. 17 2021	Oct. 16 2022
Magnetic field probe 100cm^2	Narda	ELT probe 100cm^2	M0675	Oct. 17 2021	Oct. 16 2022
Electric field Meter	Combiova	EFM-200	N/A	Oct. 17 2021	Oct. 16 2022
Isotropic Electric field probe	Narda	EP-601	611WX70332	Oct. 17 2021	Oct. 16 2022

6 Test Result

H-Filed Strength at 20 cm from the edges surrounding the EUT (A/m)

Frequency Range (MHz)	Test Position Left	Test Position Right	Test Position Bottom	Test Position Rear	Test Position Front	Limits (A/m)
0.115-0.205	0.16	0.15	0.14	0.17	0.15	1.63

H-Filed Strength at 20 cm from the top of the EUT (A/m)

Frequency Range (MHz)	Test Position Top	Limits (A/m)
0.115-0.205	0.18	1.63

H-Filed Strength at 18 cm from the edges surrounding the EUT (A/m)

Frequency Range (MHz)	Test Position Left	Test Position Right	Test Position Bottom	Test Position Rear	Test Position Front	Limits (A/m)
0.115-0.205	0.21	0.22	0.20	0.21	0.20	1.63

H-Filed Strength at 18 cm from the top of the EUT (A/m)

Frequency Range (MHz)	Test Position Top	Limits (A/m)
0.115-0.205	0.23	1.63

H-Filed Strength at 16 cm from the edges surrounding the EUT (A/m)

Frequency Range (MHz)	Test Position Left	Test Position Right	Test Position Bottom	Test Position Rear	Test Position Front	Limits (A/m)
0.115-0.205	0.26	0.28	0.26	0.27	0.25	1.63

H-Filed Strength at 16 cm from the top of the EUT (A/m)

Frequency Range (MHz)	Test Position Top	Limits (A/m)
0.115-0.205	0.27	1.63

H-Filed Strength at 14 cm from the edges surrounding the EUT (A/m)

Frequency Range (MHz)	Test Position Left	Test Position Right	Test Position Bottom	Test Position Rear	Test Position Front	Limits (A/m)
0.115-0.205	0.33	0.35	0.34	0.35	0.32	1.63

H-Filed Strength at 14 cm from the top of the EUT (A/m)

Frequency Range (MHz)	Test Position Top	Limits (A/m)
0.115-0.205	0.34	1.63

H-Filed Strength at 12 cm from the edges surrounding the EUT (A/m)

Frequency Range (MHz)	Test Position Left	Test Position Right	Test Position Bottom	Test Position Rear	Test Position Front	Limits (A/m)
0.115-0.205	0.36	0.37	0.35	0.37	0.36	1.63

H-Filed Strength at 12 cm from the top of the EUT (A/m)

Frequency Range (MHz)	Test Position Top	Limits (A/m)
0.115-0.205	0.38	1.63

H-Filed Strength at 10 cm from the edges surrounding the EUT (A/m)

Frequency Range (MHz)	Test Position Left	Test Position Right	Test Position Bottom	Test Position Rear	Test Position Front	Limits (A/m)
0.115-0.205	0.42	0.45	0.46	0.49	0.48	1.63

H-Filed Strength at 10 cm from the top of the EUT (A/m)

Frequency Range (MHz)	Test Position Top	Limits (A/m)
0.115-0.205	0.50	1.63

H-Filed Strength at 8 cm from the edges surrounding the EUT (A/m)

Frequency Range (MHz)	Test Position Left	Test Position Right	Test Position Bottom	Test Position Rear	Test Position Front	Limits (A/m)
0.115-0.205	0.56	0.57	0.56	0.55	0.54	1.63

H-Filed Strength at 8 cm from the top of the EUT (A/m)

Frequency Range (MHz)	Test Position Top	Limits (A/m)
0.115-0.205	0.57	1.63

H-Filed Strength at 6 cm from the edges surrounding the EUT (A/m)

Frequency Range (MHz)	Test Position Left	Test Position Right	Test Position Bottom	Test Position Rear	Test Position Front	Limits (A/m)
0.115-0.205	0.63	0.61	0.62	0.60	0.61	1.63

H-Filed Strength at 6 cm from the top of the EUT (A/m)

Frequency Range (MHz)	Test Position Top	Limits (A/m)
0.115-0.205	0.63	1.63

H-Filed Strength at 4 cm from the edges surrounding the EUT (A/m)

Frequency Range (MHz)	Test Position Left	Test Position Right	Test Position Bottom	Test Position Rear	Test Position Front	Limits (A/m)
0.115-0.205	0.66	0.68	0.67	0.70	0.69	1.63

H-Filed Strength at 4 cm from the top of the EUT (A/m)

Frequency Range (MHz)	Test Position Top	Limits (A/m)
0.115-0.205	0.71	1.63

H-Filed Strength at 2 cm from the edges surrounding the EUT (A/m)

Frequency Range (MHz)	Test Position Left	Test Position Right	Test Position Bottom	Test Position Rear	Test Position Front	Limits (A/m)
0.115-0.205	0.76	0.78	0.77	0.75	0.75	1.63

H-Filed Strength at 2 cm from the top of the EUT (A/m)

Frequency Range (MHz)	Test Position Top	Limits (A/m)
0.115-0.205	0.77	1.63

H-Filed Strength at 0 cm from the edges surrounding the EUT (A/m)

Frequency Range (MHz)	Test Position Left	Test Position Right	Test Position Bottom	Test Position Rear	Test Position Front	Limits (A/m)
0.115-0.205	0.83	0.84	0.85	0.81	0.82	1.63

H-Filed Strength at 0 cm from the top of the EUT (A/m)

Frequency Range (MHz)	Test Position Top	Limits (A/m)
0.115-0.205	0.84	1.63

6 Test Set-up Photo

Probe	Length	Width	Radius
	2.5cm	2.5cm	1.25cm

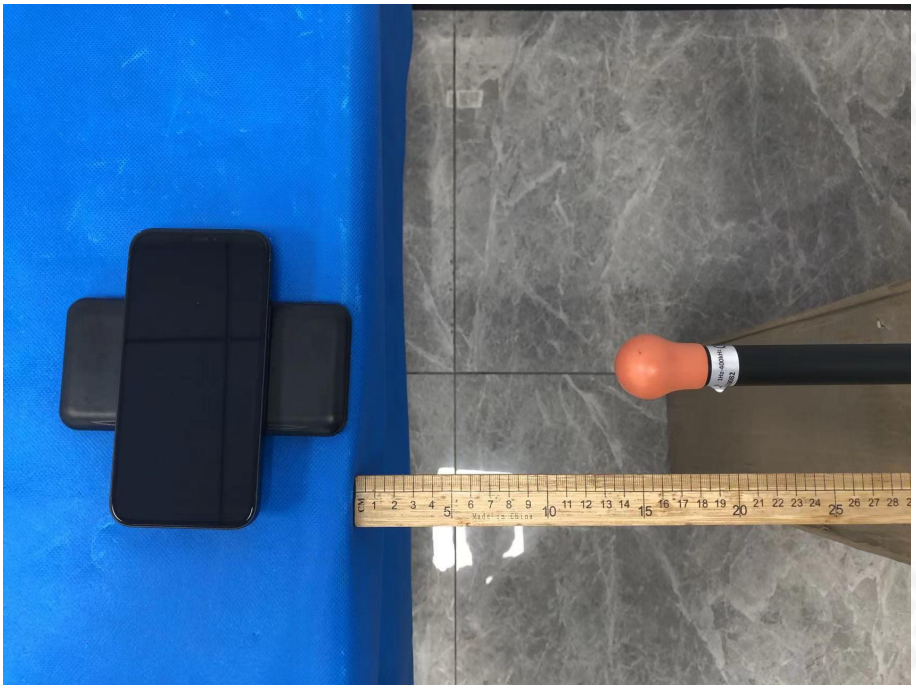

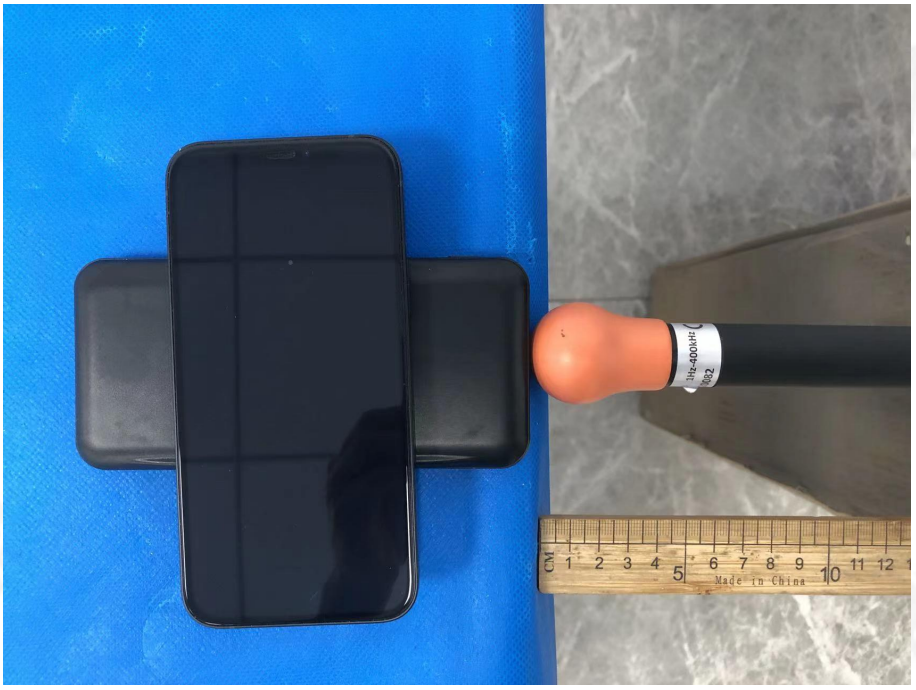
CM 1 2 3 4 5 6 7 8 9 10 11 12
Made in China

CM 1 2 3 4 5 6 7 8 9 10 11 12 13 14
Made in China

1Hz-400kHz
0082
CM 1 2 3 4 5 6 7 8 9 10 11 12 13 14 15
Made in China

1Hz-400kHz
0082
CM 1 2 3 4 5 6 7 8 9 10 11 12 13 14
Made in China