BEAM 7

MANUAL

V1.0 JANUARY 2022

TABLE OF CONTENTS

Dimensions	**1**
Safety Instruction	**2**
Fixture overview	**4**
Introduction	**5**
AC Power	**5**
Power voltage	5
Power cables	6
Relaying power to other devices	6
Data link	**6**
Tips for reliable data transmission	6
Physical installation	**7**
Fastening the fixture to a flat surface	7
Rigging via omega bracket	8
Outdoor IP-rated fixtures	9
Condensation/moisture inside housing	9
Fixtures temperature specification	9
Setup	**10**
Control panel and menu navigation	10
DMX address setting	10
W-DMX control (optional ±q1 2019)	10
Control mode	11
Control panel	**12**
Onboard control menus	**14**
DMX protocols	**16**
Arrangement of the LED groups 1-7	18
Static pixel effect chart	19
Moving pixel effect chart	20
Color Macro Chart	21
Specifications	**24**

DIMENSIONS

ALL DIMENSIONS ARE IN MILLIMETERS

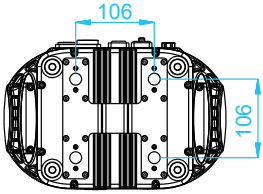

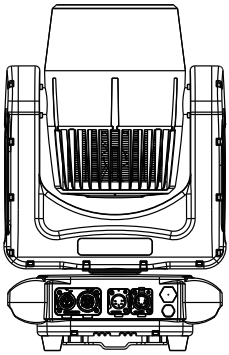

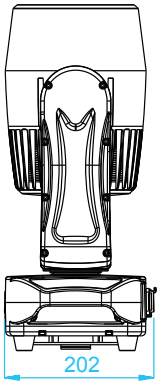

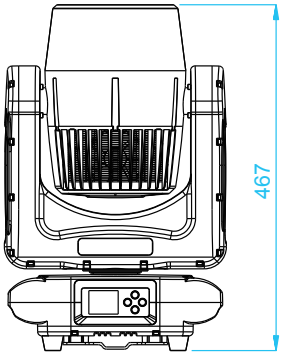

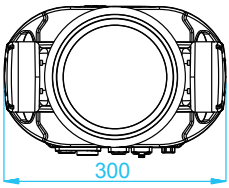

SAFETY INSTRUCTION

WARNING!

Read the safety precautions in this section before installing, powering, operating or servicing this product

The following symbols are used to identify important safety information on the product and in this manual:

DANGER!
Safety hazard.
Risk of severe injury or death.

DANGER!
Hazardous voltage. Risk of lethal or severe electric shock.

WARNING!
Fire hazard.

WARNING!
LED light emission. Risk of eye injury.

WARNING!
Burn hazard. Hot surface. Do not touch.

WARNING!
Wear protective eyewear.

WARNING!
Refer to user manual.

Warning! Risk Group 1 @ 40° (Low Risk) and Risk Group 2 @ 4° (Moderate-Risk) LED product according to EN 62471.
Do not look into the beam at short distance of the of the product..
Do not view the light output with optical instruments or any device that may concentrate the beam.

This product is for professional use only. It is not for household use.

This product presents risks of severe injury or death due to fire and burn hazards, electric shock and falls.

Read this manual before installing, powering or servicing the fixture, follow the safety precautions listed below and observe all warnings in this manual and printed on the fixture. If you have questions about how to operate the fixture safely, please contact your supplier.

PROTECTION FROM ELECTRIC SHOCK

- Disconnect the fixture from AC power before removing or installing any cover or part and when not in use.
- Always ground (earth) the fixture electrically.
- Use only a source of AC power that complies with local building and electrical codes and has both overload and ground-fault (earth-fault) protection.

- Before using the fixture, check that all power distribution equipment and cables are in perfect condition and rated for the current requirements of all connected devices.
- Power input and throughput cables must be rated 20 A minimum, have three conductors 1.5 mm² (16 AWG) minimum conductor size and an outer cable diameter of 5 - 15 mm. Cables must be hard usage type (SJT or equivalent) and heat-resistant to 90° C minimum.
- Use only PowerCON TRUE 1 ® cable connectors to connect to power input sockets. Use only PowerCON TRUE 1 ® cable connectors to connect to power through put sockets.
- Isolate the fixture from power immediately if the power plug or any seal, cover, cable, or other component is damaged, defective, deformed, wet or showing signs of overheating. Do not reapply power until repairs have been completed.
- Refer any service operation not described in this manual to a qualified technician.
- Socket outlets used to supply fixture fixtures with power or external power switches must be located near the fixtures and easily accessible so that the fixtures can easily be disconnected from power.

PROTECTION FROM BURNS AND FIRE

- The exterior of the fixture becomes hot during use. Avoid contact by persons and materials. Allow the fixture to cool for at least 5 minutes before handling.
- Keep all combustible materials (e.g. fabric, wood, paper) at least 100 mm away from the fixture.
- Keep flammable materials well away from the fixture.
- Ensure that there is free and unobstructed airflow around the fixture.

- Do not illuminate surfaces within 200 mm of the fixture.
- Do not attempt to bypass thermostatic switches or fuses.
- If you relay power from one fixture to another using power throughput sockets, do not connect more than ten fixture fixtures in total to each other in an interconnected chain.
- Connect only other fixture fixtures to fixture power throughput sockets.
- Do not connect any other type of device to these sockets.
- Do not stick filters, masks or other materials onto any optical component.
- Do not modify the fixture in any way not described in this manual.

PROTECTION FROM INJURY

- Do not look directly into the product's light output.
- Do not look at operating lamp. Eye injury may result.
- Do not look at the light output with magnifiers, telescopes, binoculars or similar optical instruments that may concentratethe light output.
- Ensure that persons are not looking directly into the front of the fixture when the product lights up suddenly. This can happen when power is applied, when the product receives a DMX signal, or when certain control menu items are selected.

- To minimize the risk of eye irritation or injury, disconnect the fixture from power at all times when the fixture is not in use and provide well-lit conditions to reduce the pupil diameter of anyone working on or near the fixture.
- Fasten the fixture securely to a fixed surface or structure when in use. The fixture is not portable when installed.
- Ensure that any supporting structure and/or hardware used can hold at least 10 times the weight of all the devices they support.

- Allow enough clearance around the head to ensure that it cannot collide with an object or another fixture when it moves.
- Check that all external covers and rigging hardware are securely fastened.
- Block access below the work area and work from a stable platform whenever installing, servicing or moving the fixture.
- Do not operate the fixture with missing or damaged covers, shields or any optical component.

FIXTURE OVERVIEW

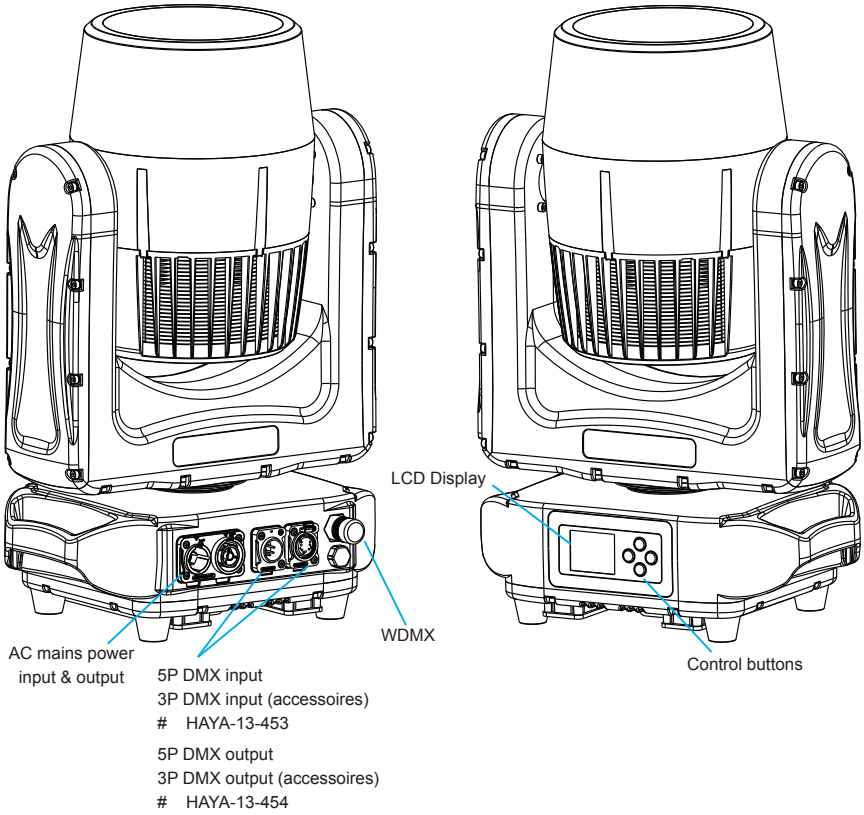

INTRODUCTION

POWERFUL AND VERSATILE OUTDOOR LED WASH

- OUTDOOR LIGHTING ESSENTIAL
- TOURING - READY, COMPACT HOUSING
- 7 RGBL HIGH POWER LEDS
- 4° - 40° ZOOM ANGLE
- IP65 RATING

USING FOR THE FIRST TIME

Warning! Read "Safety Information" before installing, powering, operating or servicing the fixture. Before applying power to the fixture:

Check that the local AC mains power source is within the fixture's power voltage and frequency ranges.

See "Power cables and power plug" on page 6. Install a PowerCON TRUE 1 ® power input connector power cable.

AC POWER

Warning! Read "Safety Information" starting on before connecting the fixtures to AC mains power.

Warning! For protection from electric shock, the fixture must be grounded (earthed). The power distributioncircuit must be equipped with a fuse or circuit breaker and ground-fault (earth-fault) protection.

Warning! Socket outlets or external power switches used to supply the fixture with power must be located near the fixture and easily accessible so that the fixtures can easily be disconnected from power.

Important! Do not insert or remove PowerCON TRUE 1 ® connectors to apply or cut power, as this may cause arcing at the terminals that will damage the connectors.

Important! Do not use an external dimming system to supply power to the fixture, as this may cause damage to the fixture that is not covered by the product warranty.

The fixture can be hard-wired to a electrical installation if you want to install it permanently, or a power plug that is suitable for the local power outlets can be installed on the power cable.

POWER VOLTAGE

Warning! Check that the voltage range specified on the fixtures serial number label matches the local AC mains power voltage before applying power to the fixture.

The fixtures accepts AC mains power at 100-240 V nominal, 50/60 Hz. Do not apply AC mains power to the fixture at any other voltage than specified.

POWER CABLES

Power input and throughput cables must be rated 16A minimum, have three conductors 1.5 mm² (16 AWG) minimum conductor size and an outer cable diameter of 5 - 15 mm. Cables must be hard usage type (SJT or equivalent) and heat- resistant to 90°C minimum. In the EU the cable must be HAR approved or equivalent.

If you install a power plug on the power cable, install a grounding-type (earthed) plug that is rated 16A minimum. Follow the plug manufacturer's instructions. Table 1 shows standard wire color-coding schemes and some possible pin identification schemes; if pins are not clearly identified.

Wire Color (EU models)	Wire Color (US models)	Conductor	Symbol
Brown	Black	Live	L
Blue	White	Neutral	N
Yellow/Green	Green	Ground (earth)	⏚ or ⏚

Table 1: Wire color-coding and power connections

RELAYING POWER TO OTHER DEVICES

Warning! Do not connect more than seven fixtures in total to AC mains power in one interconnected chain. Power can be relayed to another device via the PowerCON TRUE 1 ® throughput socket.

If you daisy chain the fixtures in a chain so that they all draw AC mains power via the first fixture, certain points must be respected:

- A heavy duty, three-conductor, 16 AWG or 1.5 mm2 cable with SJT or equivalent cable jacket must be used to connect the first fixture to AC mains power.
- PowerCON TRUE 1 ® connectors must be used to draw AC mains power from the fixtures power throughput sockets and yellow PowerCON TRUE 1 ® connectors must be used to supply power at the fixture's power input sockets.
- No matter what the AC mains power voltage is, do not connect more than ten the fixture in total (including the first fixture) to AC mains power in one interconnected daisy chain using power input and through out connectors.

DATA LINK

A DMX 512 data link is required in order to control a fixture via DMX. The fixture has 5-pin XLR connectors for DMX data input and output. The pin-out on all connectors is pin 1 = shield, pin 2 = cold (-), and pin 3 = hot (+) Pins 4 and 5 in the 5-pin XLR connectors are not used.

TIPS FOR RELIABLE DATA TRANSMISSION

To connect the fixture to data:

1. Connect the DMX data output from the controller to the 5-pin XLR connector of the nearest fixture.

2. Connect the DMX output of the fixture closest to the controller to the DMX input of the next fixture and continue connecting fixtures output to input.

PHYSICAL INSTALLATION

Warning! The fixture must be either fastened to a flat surface such as a stage or wall, or clamped to a truss or similar structure in any orientation using a rigging clamp.

Warning! If the fixture can cause injury or damage if it falls, attach an approved safety cable to one of the safety cable attachment points on the base (see “Fixture overview”).

Check that all surfaces to be illuminated are minimum 200 mm. from the fixture, that combustible materials (wood, fabric, paper, etc.) are minimum 100 mm. from the fixture, that there is free airflow around the fixture and that there are no flammable materials nearby.

FASTENING THE FIXTURE TO A FLAT SURFACE

The fixture can be fastened to a fixed flat surface that is oriented at any angle. Check that the surface can support at least 10 times the weight of all fixtures and equipment to be installed on it.

Warning! The supporting surface must be hard and flat or cooling may be blocked, which will cause overheating. Fasten the fixture securely. Do not stand it on a surface or leave it where it can be moved or can fall over. Attach a securely anchored safety cable to the safety cable attachment point (see “Fixture overview”) if the fixture is to be installed in any location where it may fall and cause injury or damage if the primary attachment fails.

1. Block access under the work area. Working from a stable platform, hang the fixture on the truss with the arrow on the base towards the area to be illuminated. Tighten the rigging clamp.
2. Secure the fixture against clamp failure with a secondary attachment such as an approved safety cable that is rated for the weight of the fixture using one of the attachment points at the edges of the base (see “Fixture overview”). Do not use any other part of the fixture as a safety cable attachment point.

The installation of the fixture has to be built and constructed in a way that it can hold 10 times the weight for 1 hour without any harming deformation.

The installation must always be secured with a secondary safety attachment, e.g. an appropriate catch net. This secondary safety attachment must be constructed in a way that no part of the installation can fall down if the main attachment fails.

When rigging, derigging or servicing the fixture staying in the area below the installation place, on bridges, under high working places and other endangered areas is forbidden.

The operator has to make sure that safety-relating and machine-technical installations are approved by an expert before taking into operation for the first time and after changes before taking into operation another time.

The operator has to make sure that safety-relating and machine-technical installations are approved by an expert after every four year in the course of an acceptance test.

The operator has to make sure that safety-relating and machine-technical installations are approved by a skilled person once a year.

The fixture should be installed outside areas where persons may walk by or be seated.

IMPORTANT! OVERHEAD RIGGING REQUIRES EXTENSIVE EXPERIENCE, including (but not limited to) calculating working load limits, installation material being used, and periodic safety inspection of all installation material and the projector. If you lack these qualifications, do not attempt the installation yourself, but instead use a professional structural rigger. Improper installation can result in bodily injury or damage to property.The fixture has to be installed out of the reach of people.

If the fixture shall be lowered from the ceiling or high joists, professional trussing systems have to be used. The fixture must never be fixed swinging freely in the room.

Caution: Fixture may cause severe injuries when crashing down! If you have doubts concerning the safety of a possible installation, do not install the moving head!

Before rigging make sure that the installation area can hold a minimum point load of 10 times the fixture's weight.

When installing the device, make sure there is no highly inflammable material (decoration articles, etc.) in a distance of min. 0.5 m.

Use an appropriate clamp to rig the fixture on the truss.

Follow the instructions mentioned at the bottom of the base.

Make sure that the device is fixed properly! Ensure that the structure (truss) to which you are attaching the fixtures is secure.

The fixture can be placed directly on the stage floor or rigged on a truss without altering its operation characteristics .

For securing the fixture to the truss, install a safety wire which can hold at least 10 times the weight of the fixture. Use only the safety wire with a snap hook with screw lock gate. Fasten the safety cable in the attachment point and around the truss as shown on the picture below.

RIGGING VIA OMEGA BRACKET:

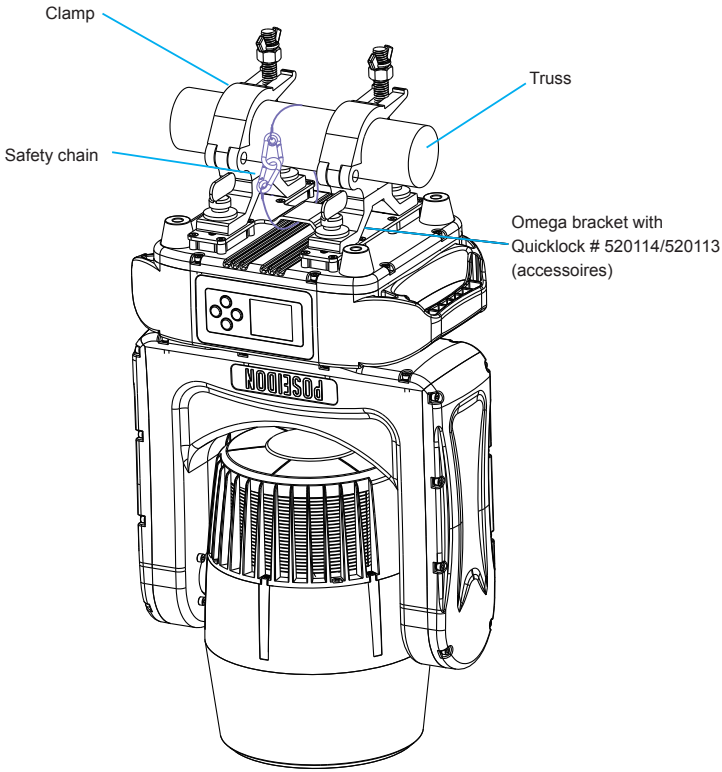

OUTDOOR IP-RATED FIXTURES

HAYA products are applied to official classified IP norm levels. For this product the IP rate is IP65 when using the covers for the chassis parts. IP65 means according classified norm: shielded against dust and pressurized water from any side. Typical use for outdoor rated stage events with normal weather acceptance. So no heavy rain, because then the water pressure over exceeds the IP norm.

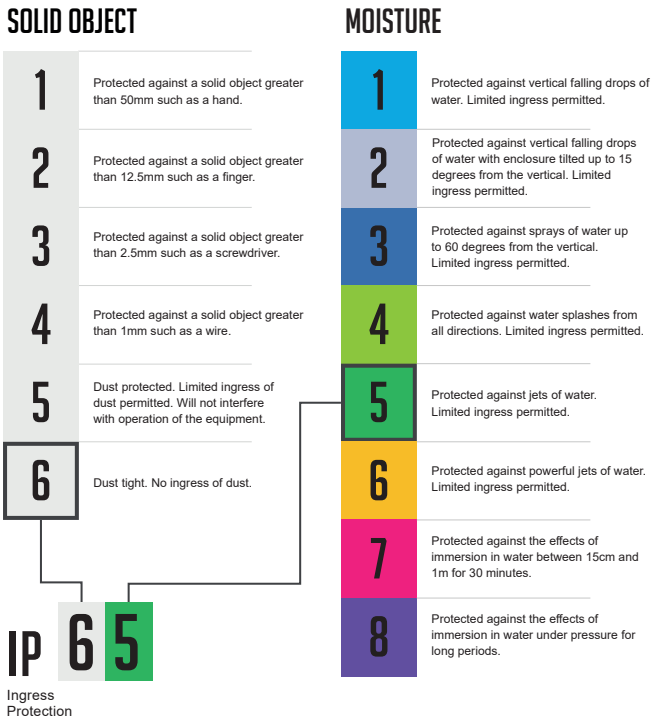

CONDENSATION/MOISTURE INSIDE HOUSING

Because of high humidity levels during production condensation can occur inside the housing. This is mostly visible on the coldest parts of the fixture, like the front glass or display. To prevent this problem we work with special conditioned areas for outdoor fixtures. Because of the breathing air valves it is still possible to get humidity inside the fixture. This will evaporate slowly. Do not put wet fixtures in a flightcase, this will help humidity enter the fixture.

FIXTURES TEMPERATURE SPECIFICATION

Make sure the fixture is used within its working temperature range. Outside this range we cannot guarantee correct operation.

TEMPORARY USAGE:

Stage event equipment is designed with temporary use in mind. Our product purpose is for theatre, festival, (disco) clubs and indoor & outdoor concerts. Long term use is possible but keep in mind that it can bring damage to aging materials and affect the coated surface (i.e. stainless steel). Rubber sealings will be negatively affected after long-term UV exposure and should be checked by qualified service technicians over time.

Tighten screws too hard will also affect the IP-rating.

SETUP

Warning! Read “Safety Information” before installing, powering or operating the fixture.

CONTROL PANEL AND MENU NAVIGATION

The onboard control panel and backlit graphic display are used to set the fixture’s DMX address, configure individual fixture settings (personality), read out data and execute service utilities. See “Onboard control menus” for a complete list of menus and commands.

Using the control buttons

- To enter the menu select [MODE].
- Press [UP] and [DOWN] to scroll within a menu or adjust values.
- To enter a menu, select a function or apply a selection, press [ENTER].
- To escape a function or move back one level in the menu structure, press [MODE].
- Hold [MENU] = highlight for 15 seconds
- Press [UP] and [DOWN] together to rotate display

DMX ADDRESS SETTING

The DMX address, also known as the start channel, is the first channel used to receive instructions from the controller. For independent control, each fixture must be assigned its to a separate channel. The DMX address can be configuredas by using the DMX ADDRESS menu in the control panel. For setting the DMX address press [ENTER] before you can change the address.

- The main screen will show a ‘dot’ and the backlight will be switched off when a DMX signal is detected.
- The fixture is fully RDM ready. So when you are using a RDM ready console you can address the unit and read out its complete status. For RDM functions please refer to the ANSI/ESTA E1.20-2006 standard

W-DMX CONTROL

Go to the W-DMX section in the main menu, press the button “UP” to switch off Wireless DMX or disconnect with all connected Transmitters.

Press the button “DOWN’ to set the unit in the ”ready to connect with all not connected transmitters’ mode. If you press the mode button on the Wireless sollution transmitter all the units in this mode will be connected.
If the unit is successfully connected in the home display the sign “ ◢ : V ” appears. If the unit is not connected to a transmitter in the home display the sign “ ◢ : X ”. If the unit is switched off in the home display the sign “ ◢ : OFF ”.

- Holding the **MENU** and **ENTER** button for more than 3 seconds, the wireless board will reset.
- Do not use Wireless DMX and Wired DMX at the same time because it will give unwanted interference

CONTROL MODE

DMX control mode is selected in the CONTROL MODE menu. The fixture can be controlled with 3 DMX control modes:

	Small-20CH	Medium-27CH	Large-55CH
Shutter	✓	✓	✓
Dimmer	✓	✓	✓
Dimmer fine		✓	✓
Pan	✓	✓	✓
Pan fine	✓	✓	✓
Tilt	✓	✓	✓
Tilt fine	✓	✓	✓
P/T speed/time	✓	✓	✓
Zoom	✓	✓	✓
Function set,	✓	✓	✓
Macro color	✓	✓	✓
RGBL	✓	✓	✓
RGBL fine		✓	✓
LED 1-7 (RGBL)			✓
CCT		✓	✓
CCT channel tint		✓	✓
Static pixel effect	✓	✓	✓
Move pixel effect	✓	✓	✓
Move pixel effect speed	✓	✓	✓
Crossfade/dimmer	✓	✓	✓
Back ground color	✓	✓	✓
Back ground dimmer	✓	✓	✓

CONTROL PANEL

Here you can set all functions for the fixture.

PERSONALITY

FANS	Regulated = power : Min 84.5%, FAN : variable Full = power : Min 84.5%, FAN : 4000RPM Silent 1 = power : Min 60%, FAN : 2240RPM Silent 2 = power : Min 40% ,FAN : 1840RPM
Dimmer speed	“Normal” means select linear dimming, or choose dimmer 1-4 to control the dimming speed, dimming 1 of the fastest dimming curves, 4 for the most slowly dimming curve.
Dimmer curve	Linear / Square law / INV Square law / S- Curve / Special
WDMX Reset	Reset the Wireless Board
LED Calibration	Normal = Color calibration mode off FACTORY = Factory calibration mode, All colors are calibrated
Refresh rate	Controls the flicker frequency of the fixture 1200 / 2400 / 4800 / 10000 Hz
DMX HOLD	DMX HOLD = The fixture will remember on last values when you disconnect DMX NO DMX HOLD = The fixture has no output when you disconnect DMX
Display	Rotate: Auto= Auto Display Flip Function enabled Normal= Auto Display Flip Function disbaled Background Light: always on = Display background Light always on Auto off = Display deactivation after approximately 15 second of inactivity BL blinking when no DMX : Yes = When there is no Dmx , the dmx value will be blinking on main menu NO = When there is no dmx , the dmx value will be static on main menu
Indicator Light	On = When the display is standby, there are 2 low brightness dots visible to show that the fixture is on and dmx Off = When the display is standby, no dot visible to show
Zoom Option	Normal= zoom max 30° Wide= zoom max 40°
KEY-Lock	Locks all the button functions. Standard unlocking password is (MENU+UP+MENU+DOWN+MENU+UP+MENU+DOWN+ENTER)
Font selection	Select display font

DIMMER MODE

provides five dimming options (see picture below):

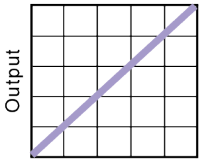

LINEAR

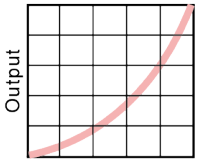

SQUARE LAW

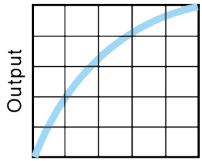

INVERSE SQUARE LAW

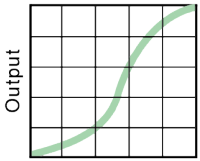

S-CURVE

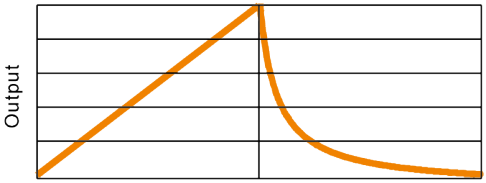

SPECIAL

- **LINEAR** – the increase in light intensity appears to be linear as DMX value is increased.
- **SQUARE LAW** – light intensity control is finer at low levels and coarser at high levels.
- **INV Square law** – light intensity control is coarser at low levels and finer at high levels.
- **S-CURVE** – light intensity control is finer at low levels and high levels and coarser at medium levels.
- **Special** – the light intensity was linear increase with DMX value , and light intensity control is finer at low level with DMX values decrease , the dimmer speed will also has effect on it.

Whichever DIMMER CURVE option you select, you can choose between NORMAL or SMOOTH 1 / 2 / 3 / 4 dimming settings:

- **NORMAL** is the default setting. It gives a virtually instantaneous reaction when you dim from one intensity to another, but dimming slowly from one intensity to another may appear slightly uneven.
- The **MOOTH 1** / **2** / **3** / **4** setting gives smoother dimming during slow changes in intensity, but it limits the speed of dimming changes slightly. This makes it ideal for slow, smooth dimming, but a short time-lag may be noticeable if you try to dim quickly from one intensity to another.

ONBOARD CONTROL MENU

NO.	Main menu	Menu level 2	Menu level 3	Remark
1	DMX ADDRESS	Set DMX Address	<001>	Default : 001
		DMX Signal Mode	wire / wireless	Default : wire
2	CONTROL MODE	Mode 1 - 20CH	1.Shutter, 2.Dimmer, 3.Pan, 4.Pan fine, 5.Tilt, 6.Tilt fine, 7.P/T speed/time, 8.Zoom, 9.Function set, 10.Macro color, 11.Red, 12.Green, 13.Blue, 14.Lime, 15.Static pixel effect, 16.M.P effect, 17.M.P effect speed, 18.Crossfade/dimmer, 19.BG color, 20.BG dimmer	Default : 27CH
		Mode 2 - 27CH	1.Shutter, 2.Dimmer, 3.Dimmer fine, 4.Pan, 5.Pan fine, 6.Tilt, 7.Tilt fine, 8.P/T speed/time, 9.Zoom, 10.Function set, 11.Macro color, 12.Red, 13.Red fine, 14.Green, 15.Green fine, 16.Blue, 17.Blue fine, 18.Lime, 19.Lime fine, 20.CCT, 21.CCT channel tint, 22.Static pixel effect, 23.M.P effect, 24.M.P effect speed, 25.Crossfade/dimmer, 26.BG color, 27.BG dimmer	
		Mode 3 - 55CH	1.Shutter, 2.Dimmer, 3.Dimmer fine, 4.Pan, 5.Pan fine, 6.Tilt, 7.Tilt fine, 8.P/T speed/time, 9.Zoom, 10.Function set, 11.Macro color, 12.Red, 13.Red fine, 14.Green, 15.Green fine, 16.Blue, 17.Blue fine, 18.Lime, 19.Lime fine, 20.Red 1, 21.Green 1, 22.Blue 1, 23.Lime 1, 24.Red 2, 25.Green 2, 26.Blue 2, 27.Lime 2, 28.Red 3, 29.Green 3, 30.Blue 3, 31.Lime 3, 32.Red 4, 33.Green 4, 34.Blue 4, 35.Lime 4, 36.Red 5, 37.Green 5, 38.Blue 5, 39.Lime 5, 40.Red 6, 41.Green 6, 42.Blue 6, 43.Lime 6, 44.Red 7, 45.Green 7, 46.Blue 7, 47.Lime 7, 48.CCT, 49.CCT channel tint, 50.Static pixel effect, 51.M.P effect, 52.M.P effect speed, 53.Crossfade/dimmer, 54.BG color, 55.BG dimmer	
3	Motor	Pan invert	Normal / Inverted	Default : Normal
		Tilt invert	Normal / Inverted	Default : Normal
		Pan/Tilt Swap	Normal / Inverted	Default : Normal
4	PERSONALITY	FANS	Regulated / Full / Silent 1 / Silent 2	Default : Regulated
		Dimmer Speed	Normal / Smooth 1 / Smooth 2 / Smooth 3 / Smooth 4	Default : Normal
		Dimmer Curve	Linear / Square law/INV Square law / S-curve / Special	Default : Linear
		WDMX Reset	Reset the Wireless ?	
		Calibration	LED Calibration — Factory / Normal	Default : Factory
			P/T Motor calibration — Tilt offset (-128 ~ +127); Pan offset (-128 ~ +127)	
			Zoom calibration — Offset (-19 ~ +19)	
		Refresh Rate	1200Hz / 2400Hz / 4800Hz / 10000Hz	Default : 1200Hz
		DMX hold	Dmx hold / No dmx hold	Default : Dmx hold
		Display	Rotate — Auto / Normal	Default : Normal
			Background Light — Always on / Auto off (15S)	Default : Auto off
			BL blinking when no DMX — Yes ~ no	Default : Yes
		Indicator Light	On / Off	Default : Off
		Zoom Option	Normal / Wide	Default : Normal
		Key Lock	On / Off	Default : Off
		Font selection	Helvetica / Arial / Univers / Calibri / Big_noodle_titling / Gill Sans / Book Antiqua	Default : Helvetica

5	STATIC COLOR	Fixed color	R, G, B, L, RG, RB, GB, RGB, RL, GL, BL, RGL, RBL, GBL, RGBL		Default : RGBL
		CCT	2500K / 2800K / 3200K / 4000K / 5000K / 5600K / 6000K / 7000K / 8000K / 9000K /10000K		Default : 7000K
		Manual color	Dimmer	0 - 255	Default : 000
			Red	0 - 255	Default : 000
			Green	0 - 255	Default : 000
			Blue	0 - 255	Default : 000
			Lime	0 - 255	Default : 000
			Strobe	0 - 255	Default : 000
		Pan	0 - 255		Default : 000
		Pan fine	0 - 255		Default : 000
		Tilt	0 - 255		Default : 000
		Tilt fine	0 - 255		Default : 000
		Zoom	0 - 255		Default : 000
6	AUTO COLOR	Auto	01 - 20		Default : Auto 01
		Speed	0 - 255		Default : 000
		Pan	0 - 255		Default : 000
		Pan fine	0 - 255		Default : 000
		Tilt	0 - 255		Default : 000
		Tilt fine	0 - 255		Default : 000
		Zoom	0 - 255		Default : 000
7	Test	Test led / Test pan / Test tilt / Test zoom / Test all			
8	INFO	Software version	Display board Vx.xx		
			Pan/Tilt board Vx.xx		
			Led board Vx.xx		
		Usage time	TOTAL: Xxxx H		
			LED total: Xxxx H		
		Temperature	Head: XXX°C (Stored max: XXX°C,Stored min: XXX°C)		
			Base: XXX°C (Stored max: XXX°C,Stored min: XXX°C)		
		Humidity	Head: xx%RH (Stored max: XXXRH,Stored min: XXXRH)		
			Base: xx%RH (Stored max: XXXRHStored min: XXXRH)		
		Fan	xxx RPM		
			xx%		
		RDM.UID	0x02E2003xxxxx		
		DMX LIVE	Show all received DMX data		
		Error information	No errors detected		
			boards health status		
			Error code:		Clear error message?
9	Reset	Pan&Tilt resetting			
		Zoom motor resetting			
		Factory reset			

DMX PROTOCOLS

20 CH	27 CH	54 CH	Function	Value	Setting	Remark
1	1	1	Shutter	000 - 019	No function	
				020 - 024	Shutter open	
				025 - 064	Strobe 1 (fast → slow)	
				065 - 069	Shutter open	
				070 - 084	Strobe 2: opening pulse (fast → slow)	
				085 - 089	Shutter open	
				090 - 104	Strobe 3: closing pulse (fast → slow)	
				105 - 109	Shutter open	
				110 - 124	Strobe 4: random strobe (fast → slow)	
				125 - 129	Shutter open	
				130 - 144	Strobe 5: random opening pulse (fast → slow)	
				145 - 149	Shutter open	
				150 - 164	Strobe 6: random closing pulse (fast → slow)	
				165 - 169	Shutter open	
				170 - 184	Strobe 7: burst pulse (fast → slow)	
				185 - 189	Shutter open	
				190 - 204	Strobe 8: random burst pulse (fast → slow)	
				205 - 209	Shutter open	
				210 - 224	Strobe 9: sine wave (fast → slow)	
				225 - 229	Shutter open	
				230 - 244	Strobe 10: burst (fast → slow)	
				245 - 255	Shutter open	
2	2	2	Dimmer	000 - 255	0 - 100%	
	3	3	Dimmer fine	000 - 255	0 - 100%	
3	4	4	Pan	000 - 255	Pan movement by 540°	
4	5	5	Pan fine	000 - 255	Fine control of pan movement	
5	6	6	Tilt	000 - 255	Tilt movement by 270°	
6	7	7	Tilt fine	000 - 255	Fine control of tilt movement	
7	8	8	P/T speed/time	000 - 255	Fast → Slow	
8	9	9	Zoom	000 - 255	0-100% (wide - narrow)	

20 CH	27 CH	54 CH	Function	Value	Setting	Remark
9	10	10	Fixture control settings	000 - 009	No function	Value must be held for 3 seconds to activate.
				010 - 014	Reset entire fixture	
				015 - 059	No function	
				060 - 064	Fan mode REGULATED	
				065 - 069	Fan mode FULL	
				070 - 074	Fan mode SILENT 1	
				075 - 079	Fan mode SILENT 2	
				080 - 089	No function	
				090 - 094	Calibrated color output mode- Calibrated= ON	
				095 - 099	No function	
				100 - 104	Raw color output mode- Calibrated = OFF	
				105 - 129	No function	
				130 - 134	1200 Hz Refresh rate	
				135 - 139	2400 Hz Refresh rate	
				140 - 144	4800Hz Refresh rate	
				145 - 149	10000Hz Refresh rate	
				150 - 154	No function	
				155 - 159	Zoom Option - Normal	
				160 - 164	No function	
				165 - 169	Zoom Option - Wide	
				170 - 174	No function	
				175 - 179	WDMX - RESET	
				180 - 184	No function	
				185 - 189	Dimmer Speed -- Normal	
				190 - 194	No function	
				195 - 199	Dimmer Speed -- Smooth 1	
				200 - 204	Dimmer Speed -- Smooth 2	
				205 - 209	Dimmer Speed -- Smooth 3	
				210 - 214	Dimmer Speed -- Smooth 4	
				215 - 219	No function	
				230 - 234	Pan/tilt motor reset	
				235 - 239	No function	
				240 - 244	Zoom motor reset	
				245- 249	No function	
				250 - 255	Illuminate display	
10	11	11	Color macro	000 - 255	Please see page 21 Color macro chart	
11	12	12	Red	000 - 255	0 - 100%	
	13	13	Red fine	000 - 255	0 - 100%	
12	14	14	Green	000 - 255	0 - 100%	
	15	15	Green fine	000 - 255	0 - 100%	
13	16	16	Blue	000 - 255	0 - 100%	
	17	17	Blue fine	000 - 255	0 - 100%	
14	18	18	Lime	000 - 255	0 - 100%	
	19	19	Lime fine	000 - 255	0 - 100%	
		20	Red 1	000 - 255	0 - 100%	
		21	Green 1	000 - 255	0 - 100%	
		22	Blue 1	000 - 255	0 - 100%	
		23	Lime 1	000 - 255	0 - 100%	
		24	Red 2	000 - 255	0 - 100%	
		25	Green 2	000 - 255	0 - 100%	
		26	Blue 2	000 - 255	0 - 100%	
		27	Lime 2	000 - 255	0 - 100%	
		28	Red 3	000 - 255	0 - 100%	
		29	Green 3	000 - 255	0 - 100%	
		30	Blue 3	000 - 255	0 - 100%	
		31	Lime 3	000 - 255	0 - 100%	
		32	Red 4	000 - 255	0 - 100%	
		33	Green 4	000 - 255	0 - 100%	
		34	Blue 4	000 - 255	0 - 100%	
		35	Lime 4	000 - 255	0 - 100%	

20 CH	27 CH	54 CH	Function	Value	Setting	Remark
		36	Red 5	000 - 255	0 - 100%	
		37	Green 5	000 - 255	0 - 100%	
		38	Blue 5	000 - 255	0 - 100%	
		39	Lime 5	000 - 255	0 - 100%	
		40	Red 6	000 - 255	0 - 100%	
		41	Green 6	000 - 255	0 - 100%	
		42	Blue 6	000 - 255	0 - 100%	
		43	Lime 6	000 - 255	0 - 100%	
		44	Red 7	000 - 255	0 - 100%	
		45	Green 7	000 - 255	0 - 100%	
		46	Blue 7	000 - 255	0 - 100%	
		47	Lime 7	000 - 255	0 - 100%	
	20	48	CCT	000 - 005 006 - 255	No function 10000k - 2500k	
	21	49	CCT channel tint	000 001-127 128-128 129-255	No Function Magenta - Neutral Neutral Neutral - Green	
15	22	50	Static pixel effect	000 - 255	Please see page 19 Static effect	
16	23	51	Moving pixel effect	000 - 255	Please see page 20 Moving effect	
17	24	52	Moving effect speed	000 - 255	Slow → Fast	
18	25	53	Crossfade/dimmer	000 - 255	Fast → Slow	
19	26	54	Background color	000 - 255	Please see page 21 Color macro chart	
20	27	55	Background dimmer	000 - 255	0 - 100%	

ARRANGEMENT OF THE LED GROUPS 1-7

The Pan/Tilt values are at 128/35. The display is facing towards you.

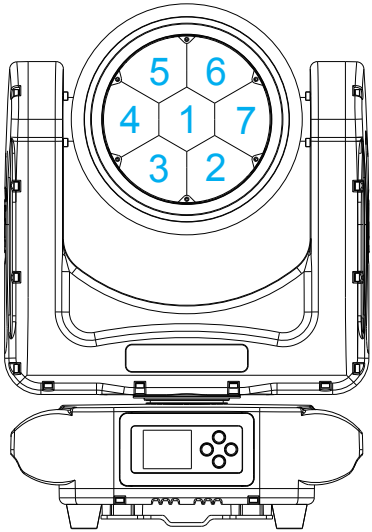

STATIC PIXEL EFFECT CHART

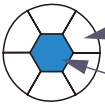

Background color(White): control by Background Macro color channel value.

Static pixel color(Blue): control by RGBL / Macro / CCT channel value.

No.	Dmx Value	Pixel
0	000 - 004	No funtion
1	005 - 009	
2	010 - 014	
3	015 - 019	
4	020 - 024	
5	025 - 029	
6	030 - 034	
7	035 - 039	
8	040 - 044	
9	045 - 049	
10	050 - 054	
11	055 - 059	
12	060 - 064	
13	065 - 069	
14	070 - 074	
15	075 - 079	
16	080 - 084	
17	085 - 089	
18	090 - 094	
19	095 - 099	
20	100 - 104	
21	105 - 109	
22	110 - 114	
23	115 - 119	
24	120 - 124	
25	125 - 129	

No.	Dmx Value	Pixel
26	130 - 137	
27	135 - 139	
28	140 - 144	
29	145 - 149	
30	150 - 154	
31	155 - 159	
32	160 - 164	
33	165 - 169	
34	170 - 174	
35	175 - 179	
36	180 - 184	
37	185 - 189	
38	190 - 194	
39	195 - 199	
40	200 - 204	
41	205 - 209	
42	210 - 214	
43	215 - 219	
44	220 - 224	
45	225 - 229	
46	230 - 234	
47	235 - 239	
48	240 - 244	
49	245 - 249	
50	250 - 254	
51	255	

MOVING PIXEL EFFECT CHART

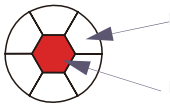

Background color(White): control by Background Macro color channel value.

Move pixel color(Red): control by RGBL / Macro / CCT channel value.

Pixel	Dmx Value	step 1	step 2	step 3	step 4	step 5	step 6	step 7	step 8	step 9	step10	step11	step12
0	000 - 004	No funtion											
1	005 - 009												
2	010 - 014												
3	015 - 019												
4	020 - 024												
5	025 - 029												
6	030 - 034												
7	035 - 039												
8	040 - 044												
9	045 - 049												
10	050 - 054												
11	055 - 059												
12	060 - 064												
13	065 - 069												
14	070 - 074												
15	075 - 079												
16	080 - 084												
17	085 - 089												
18	090 - 094												
19	095 - 099												
20	100 - 104												
21	105 - 109												
22	110 - 114												
23	115 - 119												
24	120 - 255												

COLOR MACRO CHART

DMX value	Gel Name	Color Number
0-4	no function	
5	Rose Pink	LEE 002
6	Medium Bastard Amber	LEE 004
7	Pale Yellow	LEE 007
8	Dark Salmon	LEE 008
9	Pale Amber Gold	LEE 009
10	Medium Yellow	LEE 010
11	Straw Tint	LEE 013
12	Deep Straw	LEE 015
13	Surprise Peach	LEE 017
14	Medium Amber	LEE 020
15	Dark Amber	LEE 022
16	Sunset Red	LEE 025
17	Bright Red	LEE 026
18	Medium Pink	LEE 036
19	Rose Purple	LEE 048
20	Lavender	LEE 058
21	Pale Blue	LEE 063
22	Sky Blue	LEE 068
23	Tokyo Blue	LEE 071
24	Evening Blue	LEE 075
25	Lime Green	LEE 088
26	Moss Green	LEE 089
27	Dark Yellow Green	LEE 090
28	Yellow	LEE 101
29	Straw	LEE 103
30	Deep Amber	LEE 104
31	Orange	LEE 105
32	Primary Red	LEE 106
33	Light Rose	LEE 107
34	English Rose	LEE 108
35	Light Salmon	LEE 109
36	Middle Rose	LEE 110
37	Dark Pink	LEE 111
38	Magenta	LEE 113
39	Peacock Blue	LEE 115
40	Steel Blue	LEE 117
41	Light Blue	LEE 118
42	Dark Blue	LEE 119
43	LEE Green	LEE 121

DMX value	Gel Name	Color Number
44	Fern Green	LEE 122
45	Dark Green	LEE 124
46	Mauve	LEE 126
47	Smokey Pink	LEE 127
48	Bright Pink	LEE 128
49	Marine Blue	LEE 131
50	Medium Blue	LEE 132
51	Golden Amber	LEE 134
52	Deep Golden Amber	LEE 135
53	Special Lavender	LEE 137
54	Pale Green	LEE 138
55	Primary Green	LEE 139
56	Summer Blue	LEE 140
57	Bright Blue	LEE 141
58	Pale Violet	LEE 142
59	Pale Navy Blue	LEE 143
60	No Colour Blue	LEE 144
61	Apricot	LEE 147
62	Bright Rose	LEE 148
63	Gold Tint	LEE 151
64	Pale Gold	LEE 152
65	Pale Salmon	LEE 153
66	Pale Rose	LEE 154
67	Chocolate	LEE 156
68	Pink	LEE 157
69	Deep Orange	LEE 158
70	Slate Blue	LEE 161
71	Bastard Amber	LEE 162
72	Flame Red	LEE 164
73	Daylight Blue	LEE 165
74	Deep Lavender	LEE 170
75	Lagoon Blue	LEE 172
76	Dark Steel Blue	LEE 174
77	Loving Amber	LEE 176
78	Chrome Orange	LEE 179
79	Dark Lavender	LEE 180
80	Congo Blue	LEE 181
81	Moonlight Blue	LEE 183
82	Flesh Pink	LEE 192
83	Surprise Pink	LEE 194

DMX value	Gel Name	Color Number
84	Zenith Blue	LEE 195
85	True Blue	LEE 196
86	Alice Blue	LEE 197
87	Palace Blue	LEE 198
88	Regal Blue	LEE 199
89	Double CTB	LEE 200
90	Full CTB	LEE 201
91	Half CTB	LEE 202
92	Quarter CTB	LEE 203
93	Full CTO	LEE 204
94	Half CTO	LEE 205
95	Quarter CTO	LEE 206
96	Full CTO + .3 ND	LEE 207
97	Full CTO + .6 ND	LEE 208
98	LCT Yellow (Y1)	LEE 212
99	White Flame Green	LEE 213
100	LEE Fluorescent Green	LEE 219
101	Super Correction LCT Yellow	LEE 230
102	Super Correction W.F. Green	LEE 232
103	HMI (to Tungsten)	LEE 236
104	CID (to Tungsten)	LEE 237
105	CSI (to Tungsten)	LEE 238
106	LEE Fluorescent 5700 Kelvin	LEE 241
107	LEE Fluorescent 4300 Kelvin	LEE 242
108	LEE Fluorescent 3600 Kelvin	LEE 243
109	LEE Plus Green	LEE 244
110	Half Plus Green	LEE 245
111	LEE Minus Green	LEE 247
112	Half Minus Green	LEE 248
113	Quarter Minus Green	LEE 249
114	Three Quarter CTB	LEE 281
115	One and a Half CTB	LEE 283
116	Three Quarter CTO	LEE 285
117	One and a Half CTO	LEE 286
118	Double CTO	LEE 287
119	Soft Green	LEE 322
120	Jade	LEE 323
121	Forest Green	LEE 327
122	Follies Pink	LEE 328
123	Special Rose Pink	LEE 332

DMX value	Gel Name	Color Number
124	Special Medium Lavender	LEE 343
125	Fuchsia Pink	LEE 345
126	Glacier Blue	LEE 352
127	Lighter Blue	LEE 353
128	Special Steel Blue	LEE 354
129	Special Medium Blue	LEE 363
130	Cornflower	LEE 366
131	Full CT Straw	LEE 441
132	Half CT Straw	LEE 442
133	Eighth CT Straw	LEE 444
134	Double New Colour Blue	LEE 500
135	New Colour Blue (Robertson Blue)	LEE 501
136	Half New Colour Blue	LEE 502
137	Waterfront Green	LEE 504
138	Sally Green	LEE 505
139	Marlene	LEE 506
140	Madge	LEE 507
141	Midnight Maya	LEE 508
142	Argent Blue	LEE 525
143	ALD Gold	LEE 550
144	Full CT Eight Five	LEE 604
145	Industry Sodium	LEE 650
146	HI Sodium	LEE 651
147	Urban Sodium	LEE 652
148	Perfect Lavender	LEE 700
149	Provence	LEE 701
150	Special Pale Lavender	LEE 702
151	Cold Lavender	LEE 703
152	Lily	LEE 704
153	King Fals Lavender	LEE 706
154	Cool Lavender	LEE 708
155	Electric Lilac	LEE 709
156	Spir Special Blue	LEE 710
157	Cold Blue	LEE 711
158	Bedford Blue	LEE 712
159	Elysian Blue	LEE 714
160	Cabana Blue	LEE 715
161	Mikkel Blue	LEE 716
162	Colour Wash Blue	LEE 719
163	Berry Blue	LEE 721

DMX value	Gel Name	Color Number
164	Bray Blue	LEE 722
165	Virgin Blue	LEE 723
166	Ocean Blue	LEE 724
167	Old Steel Blue	LEE 725
168	QFD Blue	LEE 727
169	Steel Green	LEE 728
170	Scuba Blue	LEE 729
171	Twickenham Green	LEE 736
172	JAS Green	LEE 738
173	Bram Brown	LEE 742
174	Dirty White	LEE 744
175	Easy White	LEE 747
176	Seedy Pink	LEE 748
177	Wheat	LEE 763
178	Sun Colour Straw	LEE 764
179	LEE Yellow	LEE 765
180	Oklahoma Yellow	LEE 767
181	Egg Yolk Yellow	LEE 768
182	Burnt Yellow	LEE 770
183	Rust	LEE 777
184	Millennium Gold	LEE 778
185	Bastard Pink	LEE 779
186	AS Golden Amber	LEE 780
187	Terry Red	LEE 781
188	Moroccan Pink	LEE 790
189	Vanity Fair	LEE 793
190	Pretty 'n Pink	LEE 794
191	Magical Magenta	LEE 795
192	Special KH Lavender	LEE 799
193	Color Effect	2500K
194	CCT 1	2800K
195	CCT 2	3200K
196	CCT 3	4000K
197	CCT 4	5000K
198	CCT 5	5600K
199	CCT 6	6000K
200	CCT 7	7000K
201	CCT 8	8000K
202	CCT 9	9000K
203	CCT 10	10,000K

DMX value	Function	setting
204 - 205	no function	
206 - 215	colour rainbow 1	slow - fast
216 - 225	colour rainbow 2	slow - fast
226 - 235	colour rainbow 3	slow - fast
236 - 245	colour rainbow 4	slow - fast
246 - 255	colour rainbow 5	slow - fast

SPECIFICATIONS

Power	
Input voltage & rate	100-240V, 50/60Hz
Standby power	30W
Nominal total power consumption (at nominal voltage 230V)	350W
Typical current (at nominal voltage 230V)	1.56A
Cos φ	0,974
Power plug type	Seetronic PowerCon True
Configuration	
LED color	RGBL
LED color temperature	2500 K - 10000 K
Quantity of LED	7 pcs
Dimming frequency	1200/2400/4800/10000 Hz
Dimmer resolution	8bit / 16bit
Optical	
Beam angle	4° - 40°
Photometric	
Output @1M	295602 lux
Output @5M	11824 lux
Heat management	
Cooling type:	Passive cooling
MAX. Ambient temp (Ta max)	40, °C
MIN. Ambient temp (Ta min)	25, °C
MAX housing temp.(ta=25°C)	50, °C
MAX housing temp.(ta=40°C)	65, °C
Menu	
Auto program	yes
Static color	yes
Manual calibration	yes
Factory calibration	yes
Strobe speed	0 - 20Hz
Random strobe	yes
Control	

* PF = power factor. Measurements made at nominal voltage with all LEDs at full intensity. Allow for a deviation of +/- 10%.

Control	
Control protocol	USITT DMX512/1990
DMX channel range	20 / 27 / 55
RDM	yes
RDM compliance	ANSI/ESTA E.120
WDMX	Standard
ACN	None
DMX input connection	DMX 5P in & out (3 pin possible with optional chassis part)
Data input (artnet, SACN)	None
Hardware	
Interface	Backlite LCD display
Software upload method	XLR & RJ45
Installation	
IP rating	IP65
Housing	
Safety attachment point	Yes
Physical	
Net product weight	12.7 kg
Machine dimensions - Length	300 mm
Machine dimensions - Width	205 mm
Machine dimensions - Height	467 mm
Accessories	
Included items	Power cable , manual
Approvals	
Approved certifications	CE / ROHS

FCC Statement
This equipment has been tested and found to comply with the limits for a Class B digital device, pursuant to part 15 of the FCC rules. These limits are designed to provide reasonable protection against harmful interference in a residential installation. This equipment generates, uses and can radiate radio frequency energy and, if not installed and used in accordance with the instructions, may cause harmful interference to radio communications.
However, there is no guarantee that interference will not occur in a particular installation. If this equipment does cause harmful interference to radio or television reception, which can be determined by turning the equipment off and on, the user is encouraged to try to correct the interference by one or more of the following measures:
-Reorient or relocate the receiving antenna.
-Increase the separation between the equipment and receiver.
-Connect the equipment into an outlet on a circuit different from that to which the receiver is connected.
-Consult the dealer or an experienced radio/TV technician for help.
To assure continued compliance, any changes or modifications not expressly approved by the party.Responsible for compliance could void the user’s authority to operate this equipment.
This equipment complies with Part 15 of the FCC Rules. Operation is subject to the following two conditions:
(1) This device may not cause harmful interference, and
(2) This device must accept any interference received, including interference that may cause undesired operation.

FCC Radiation Exposure Statement:
The device has been evaluated to meet general RF exposure requirement.
The device can ben used inthe portable exposure condition with restiction

FCC Radiation Exposure Statement:
The equipment complies with FCC Radiation exposure limits set forth for uncontrolled enviroment. This equipment should be installed and operated with minimum distance 20cm between the radiator and your body.