Quick start guide

快速入门指南

首次使用

请将纸仓盖打开，将打印纸放到打印机上方，合上纸仓盖后，打印纸露出打印机一小段，如图所示：

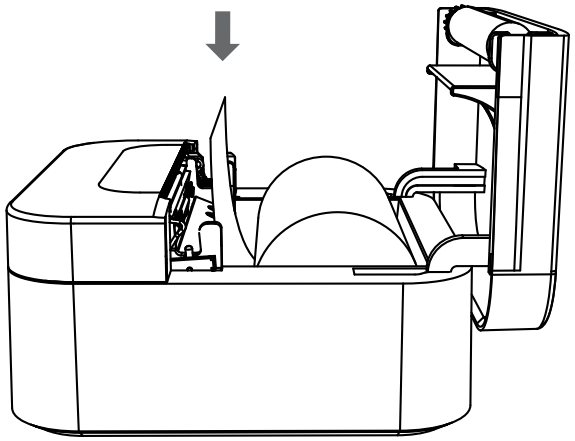

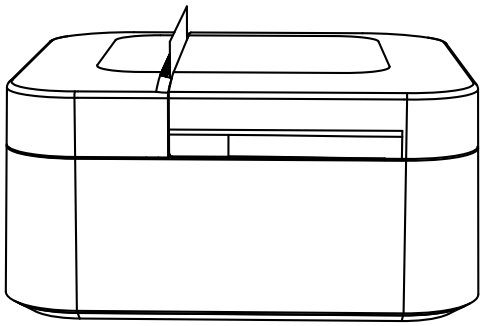

⚠ 打印纸只有一面能打印，请正确摆放打印纸的方向。

产品介绍

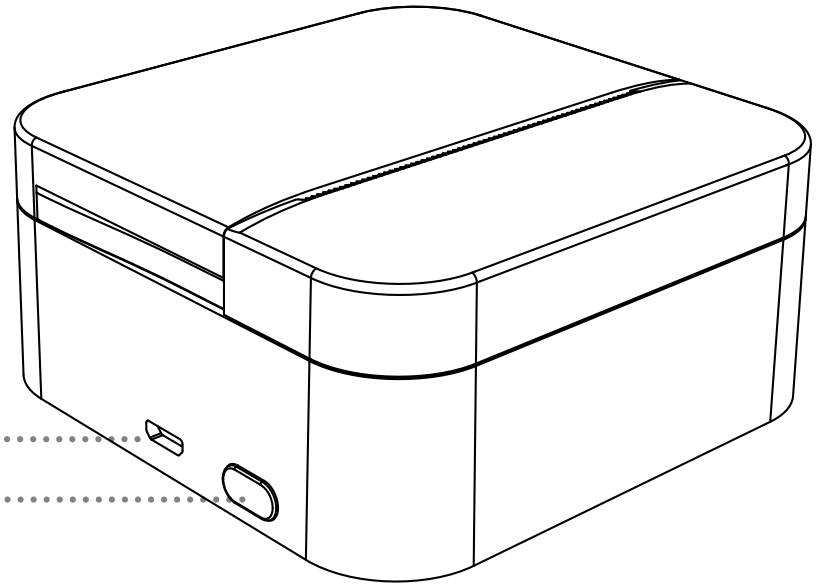

❶ MicroUSB充电口

❷ 电源键

长按3秒开/关机

电源指示灯状态

绿灯常亮：开机/待机/充电完成
红灯常亮：充电中/缺纸/过热/开盖
红灯闪烁：电量低，会造成字迹偏淡，请及时充电

APP下载与设置

APP下载

应用商店搜索“**叮当同学**”或扫下方二维码下载

扫描二维码下载

设置

双击电源键，打印机会打印出绑定设备的二维码；通过App添加设备扫一扫，扫描二维码即可连接打印机
（注意：请勿在手机蓝牙设置里搜索连接蓝牙打印机）

耗材更换

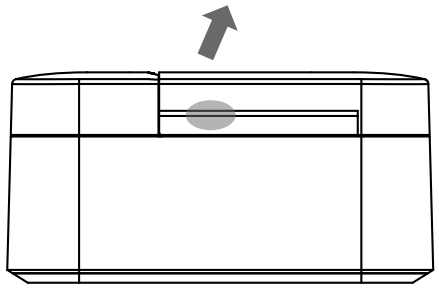

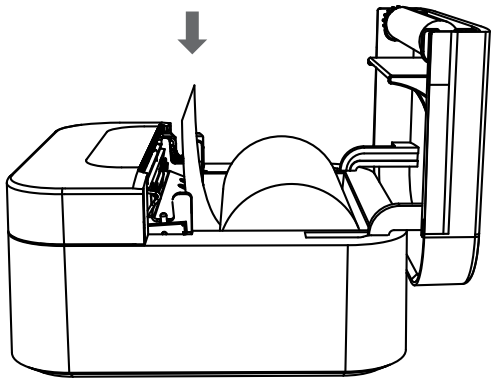

1. 开盖：如图看箭头方向，将纸仓盖往上拉，即可开盖

2. 耗材：参照图所示方向，将纸的热敏面与热敏头在同一面上

安全与注意事项

1. 本产品内置锂电池，请勿在温度高于40℃的环境下使用，请勿靠近明火与其他热源，请勿在炽热的阳光下放置，如无人、封闭的汽车内；
2. 儿童请在成人监管下充电和使用，充满电后请确保及时拨出充电线，以防过热短路或触发火灾。
3. 请勿将产品置于火中或水中，以免电池短路或造成火灾或者灼伤；
4. 工作温度范围为0℃到40℃，请不要在所建议的温度范围以外操作；

⚠ 请避免直接触打印头以免损伤，特别是打印后请勿立即直接触碰打印头，以防过热烫伤。

“三包”服务政策（中国大陆地区）

出现非人为损坏的外观问题或性能故障，享有国家规定的三包服务。
消费者自签收之日起：

- 7日内，可退货更换或维修；
- 15日内，可更换或维修；
- 1年内，可免费维修。

不符“三包”服务范围

- 因不可抗力造成的损坏；
- 未经授权的维修/拆装等；
- 长期（约3个月）未充电可能导致电池自然耗尽，无法激活充电的。

警告

- 本产品出厂标配不包含电源适配器，若使用电源适配器充电，应购买使用获得CCC认证且满足标准的5V/1A电源适配器。
- 本产品为专业产品，请使用原厂型号电池，如更换使用非原厂型号电池或用错误型号电池会有爆炸风险，务必按照说明处置用完的电池。

First time using

Please open the paper compartment cover and put the printing paper on top of the printer. After closing the paper compartment cover, the printing paper will expose a short section of the printer, as shown in the figure:

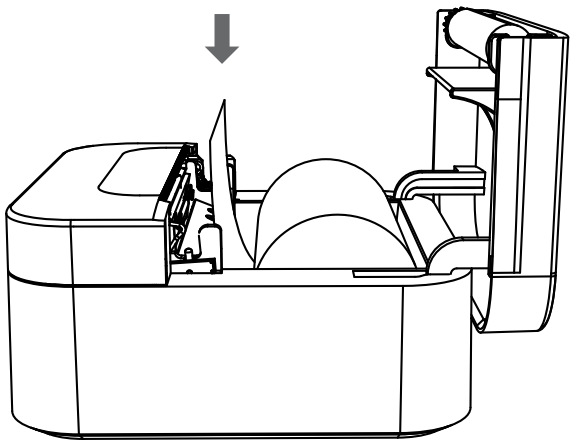

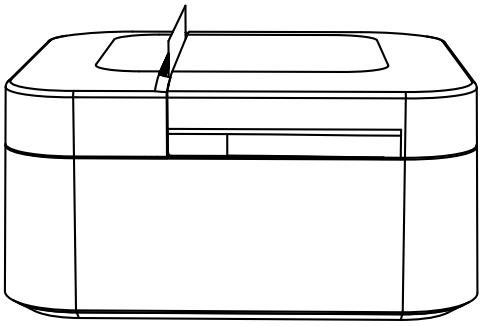

⚠ Only one side of the printing paper can be printed. Please place the printing paper in the correct direction.

Product introduction

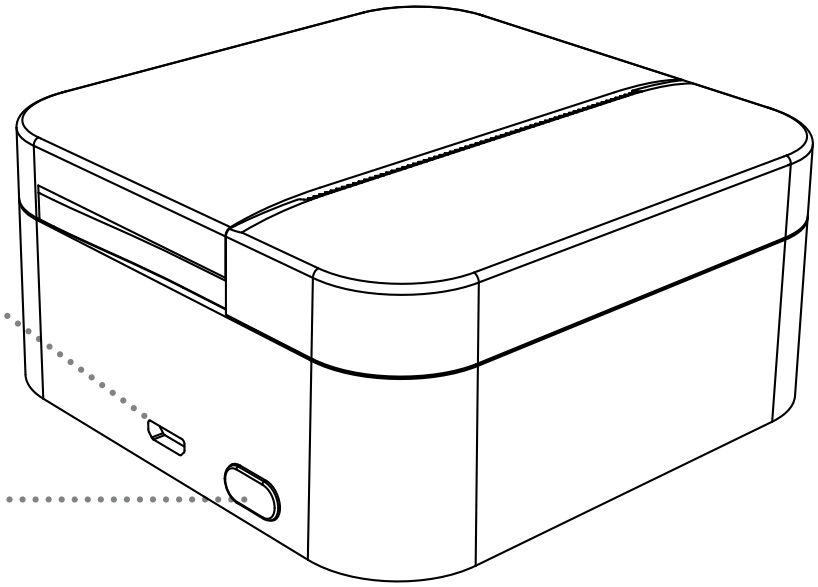

❶ Micro USB

❷ Power button

Long press for 3 seconds to turn on/off

Power indicator status

Steady green light: power on/standby/charge completed
Red light is always on: charging/out of paper/overheating/opening the cover
Flashing red: low battery will cause weak handwriting, please charge in time.

App download and settings

Mobile Download

Search “**Luck Jingle**” in the App Store

Download on the
App Store

Get it on
Google Play

Settings

Double-click the power button, the printer will print out the QR code of the bound device; add a device through the App, scan and scan the QR code to connect to the printer (Note: Do not search for Bluetooth printer connection in the Bluetooth settings of the mobile phone)

⚠ Please avoid direct contact with the print head to avoid damage, especially after printing, do not directly touch the print head immediately to prevent overheating.

Replacement of consumables

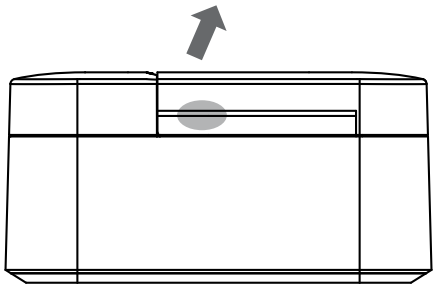

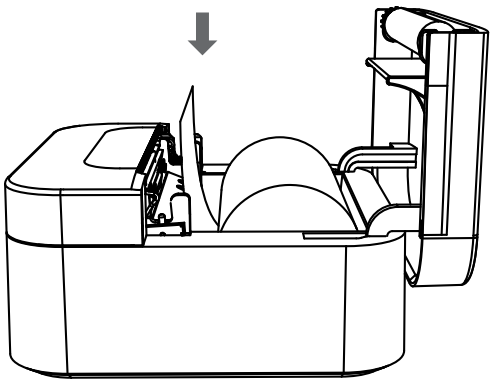

1. Open the cover: see the direction of the arrow as shown in the figure, and pull the paper compartment cover up to open the cover
2. Consumables: in the direction shown in the figure, put the heat sensitive surface of the paper on the same side as the heat sensitive head

Safety and precautions

1. There is a built-in lithium battery, please do not use it in the environment with temperature higher than 40 ℃; keep away from fire and other heat sources, and do not place it in the hot sun, such as closed car;
2. Children should be charged and used under the supervision of adults. After full charge, please make sure to pull out the charging line in time to prevent overheating, short circuit or fire;
3. Do not put the product in fire or water to avoid battery short circuit or fire or burn;
4. The operating temperature range is 0 ℃ to 40 ℃, please do not exceed the recommended temperature range.

Safety and precautions

1. There is a built-in lithium battery, please do not use it in the environment with temperature higher than 40 ℃; keep away from fire and other heat sources, and do not place it in the hot sun, such as closed car;

2. Children should be charged and used under the supervision of adults. After full charge, please make sure to pull out the charging line in time to prevent overheating, short circuit or fire;

3. Do not put the product in fire or water to avoid battery short circuit or fire or burn;

4. The operating temperature range is 0 ℃ to 40 ℃, please do not exceed the recommended temperature range;

5. If you suspect that there is a problem with the battery, please contact the after-sales service center for assistance.

CAUTION

Risk of explosion if the battery is replaced by an incorrect type.

合格证

Qualified Certificate

型号:
(MODEL) _____

检验员:
(CHECKER) _____

出厂日期:
(DATE) _____

QC
PASS

FCC Statement

This device complies with Part 15 of the FCC Rules. Operation is subject to the following two conditions:
(1)This device may not cause harmful interference.
(2)This device must accept any interference received, including interference that may cause undesired operation.
2. Changes or modifications not expressly approved by the party responsible for compliance could void the user's authority to operate the equipment.
Note:This equipment has been tested and found to comply with the limits for a class B digital device,pursuant to Part 15 of the FCC Rules. These limits are designed to provide reasonable protection against harmful interference in a residential installation.

This equipment generates uses and can radiate radio frequence energy and,if not installed and used in accordance with the instructions,may cause harmful interference to radio communications.However,there is no guarantee that interference will not occur in a particular installation.if this equipmemt does cause harmful interference to radio or television reception,which can be determined by turning the equipment off and on,the user is encouraged to try to correct the interference by one or more of the following measures:

- Reorient or relocate the receiving antenna.
- Increase the separation between the equipment and receiver.
- Connect the equipment into an autlet on a circuit different from that to which the receiver is connected.
- Consult the dealer or an experienced radio/TV technician for help.