Deodorizer Filter Replacement

1

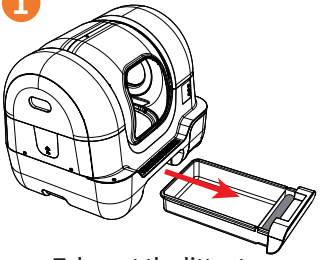

Take out the litter tray.

2

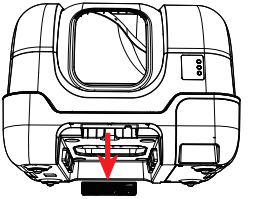

Take out the odor eliminator.

3

Push and open the back cover of the odor eliminator.

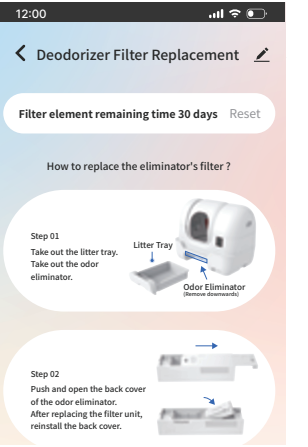

4

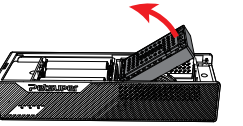

1.After replacing the filter unit, reinstall the back cover.

2.Tap the "Reset" button next to "Filter Remaining Time" at the top of the corresponding page in the app to reset the countdown.

Sifter Disassembly and Cleaning

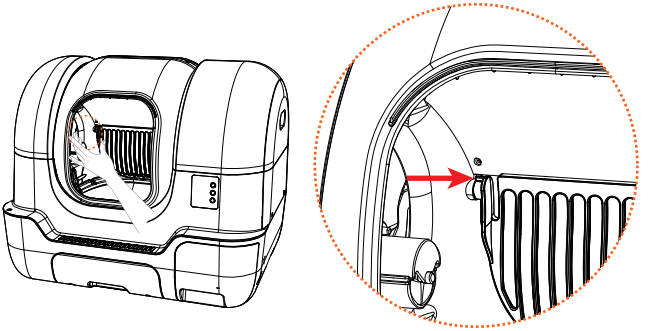

Pinch the buckle with your fingers to detach it.

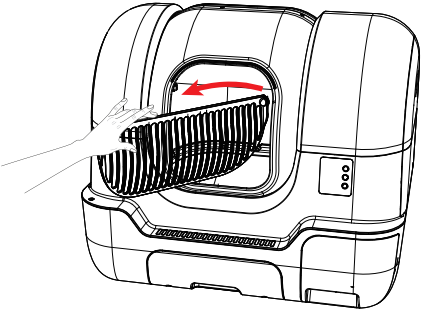

Remove the sifter.

Litter Bin Disassembly and Cleaning

1

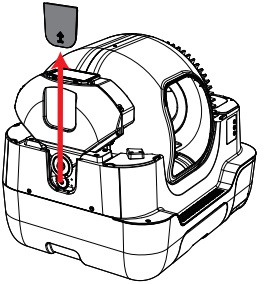

Slightly push the baffle upward and pull it out.

2

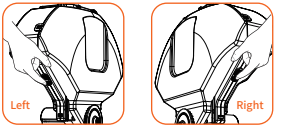

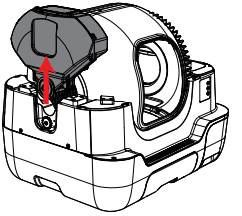

3

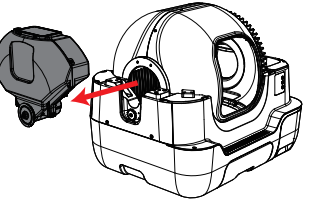

Push the buckles on both sides upward, then slightly lift the litter filling device and pull it to the left to remove.

PETSUPER After-Sales Service Card

Warranty Terms

During the warranty period, the following warranty services are available for product performance failures caused by non-human damage:
1. Within 7 days of purchase: If a Petsuper product has quality issues, the consumer may choose to return it for a full refund based on the invoice price or exchange the faulty product for a new one of the same model and specifications.
2. Within 15 days of purchase: If a Petsuper product has quality issues, the consumer may choose to exchange it for a new one of the same model and specifications.

Non-Warranty Terms

1. No "Warranty" certificate, missing valid invoice, or exceeding the "Warranty" service period.
2. Damage caused by failure to use, maintain, or store the product according to the user manual.
3. Damage caused by force majeure events such as fire, lightning, flooding, etc.
4. The product model or serial number on the warranty card does not match the actual product.
5. Damage caused by unauthorized service providers.
6. Normal fading, wear and tear, and consumption during the product's use are not considered warranty-covered malfunctions.

Please cut along the dashed line for use

Repair Service Record

Repair Center Name: _____

Repair Center Phone: _____

Repair Date: _____

Fault Cause: _____

Fault Description at the Time of Repair: _____

Proof of Return and Refund: _____

Repair Technician's Signature: _____

Repair Center Stamp: _____

StampL ocation

Service and Support

400-106-2818

WWW.PETSUPER.COM.CN

Scan the QR code to download the PETSUPER app for assistance.

Please cut along the dashed line for use

Troubleshooting Guide

Fault Description	Troubleshooting Measures
Side covers not installed (left or right)	Check if the side cover is properly installed and securely in place. Ensure there are no foreign objects blocking the installation.
Waste bin not installed	Check if the waste bin is pushed into position. Ensure there are no foreign objects inside that could obstruct it.
Litter tray not installed	Check if the litter tray is pushed into position. Ensure there are no foreign objects blocking the interior.
Roller not installed	Check if the roller is properly installed. Ensure the rollers and gears are aligned and free from any foreign objects.
Litter refilling failure	Check if the litter bin is properly installed. Ensure there are no foreign objects blocking the installation slots, and check if the screw mechanism is obstructed by any objects inside the litter bin.
Lid not opened	Check if there are any foreign objects obstructing the lid.
Insufficient litter	Check if there is enough litter in the litter bin and ensure it is properly installed.
Packaging failure	Check if the waste bag is too full, and verify if there are any obstructions in the sealing area.
Missing waste bag	Please place or replace the trash bag.
Pet nearby, pet entering	A pet is entered or nearby the entrance.
Waste bin full	The waste bin is full. Please pack and remove the waste bag.
Waste bag not removed	The waste has been packed. Please remove the waste bag.

Environmental Compliance List

Names and contents of harmful substances in the product

Component	Harmful Substance					
	Lead (pb)	Mercury (Hg)	Tin (Cd)	Hexavalent Chromium (Cr(VI))	Polybrominated Biphenyls (PBB)	Polybrominated Diphenyl Ethers (PBDE)
Printed Circuit Board Module	○	○	○	○	○	○
Plastic	○	○	○	○	○	○
Metal	○	○	○	○	○	○
Accessories	○	○	○	○	○	○

This table is prepared in accordance with the SJ/T11364 standard.

○ :Indicates that the content of the harmful substance in all homogeneous materials of this component is below the limit specified in GB/T26572.

× :Indicates that the content of the harmful substance in at least one homogeneous material of this component exceeds the limit specified in GB/T26572.

Notes:

1. The number in this symbol represents the environmental use period of the product under the usage conditions specified in the manual.

2. The harmful substances such as Lead (Pb), Mercury (Hg), Cadmium (Cd), and Hexavalent Chromium (Cr(V)) refer to the metals and their compounds.

Product Specifications

Product Name	PETSUPER Automatic Smart Cat Litter Box	Product Model	PLT01
Operating Voltage	12V DC	Rated Power	48W
Product Dimensions	690*535*585mm	Product Weight	14kg
Capacity of Litter Bin	4.5L	Roller Capacity	68L
Capacity of Litter Tray	10L	Material	ABS
Operating Environment	5°C-35°C	Applicable Pet	Cats over 6 months or 1.5kg

App Usage Guide

1 Connect to the APP

Download the PETSUPER app from the App Store or Android Market.
Go to the "Home" page of the app and tap the "+" icon to add the device. Follow the prompts to add the device to your account.

Icon	Status	Description
	White	The device is successfully connected to the network.
	Red	The device is not connected or the network is offline.

Scan the QR Code to Download PETSUPER APP

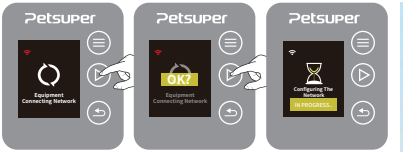

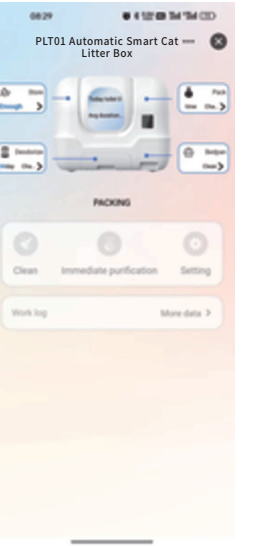

2 APP Control

The PETSUPER app allows remote settings and adjustments of the smart litter box parameters.

Scan the QR Code to Watch PETSUPER APP user tutorial.

Petsuper®

PLT01 Automatic Smart Cat Litter Box

(Auto Waste Disposal + Auto Litter Refill)

Scan the QR Code to Watch
Installation video tutorial

FCC WARNING

This device complies with part 15 of the FCC Rules. Operation is subject to the following two conditions: (1) this device may not cause harmful interference, and (2) this device must accept any interference received, including interference that may cause undesired operation.

Any changes or modifications not expressly approved by the party responsible for compliance could void the user's authority to operate the equipment.

NOTE: This equipment has been tested and found to comply with the limits for a Class B digital device, pursuant to Part 15 of the FCC Rules. These limits are designed to provide reasonable protection against harmful interference in a residential installation. This equipment generates, uses and can radiate radio frequency energy and, if not installed and used in accordance with the instructions, may cause harmful interference to radio communications. However, there is no guarantee that interference will not occur in a particular installation.

If this equipment does cause harmful interference to radio or television reception, which can be determined by turning the equipment off and on, the user is encouraged to try to correct the interference by one or more of the following measures:

-- Reorient or relocate the receiving antenna.

-- Increase the separation between the equipment and receiver.

-- Connect the equipment into an outlet on a circuit different from that to which the receiver is connected.

-- Consult the dealer or an experienced radio/TV technician for help.

To maintain compliance with FCC' s RF Exposure guidelines, This equipment should be installed and operated with minimum distance between 20cm the radiator your body: Use only the supplied antenna.