TEST REPORT

Product Name	:	Active speaker
Model Number	:	AV150-10
FCC ID	:	2A75J-AV150-10A

Prepared for	:	Taylor-Listug, Inc.
Address	:	1980 Gillespie Way El Cajon, CA USA 92020
Prepared by	:	EMTEK (NINGBO) CO., LTD.
Address	:	No. 8, Building 8, Lane 216, Qingyi Road, Ningbo Hi-Tech Zone, Ningbo, Zhejiang, China Tel: +86-574-27907998 Fax: +86-574-27721538

Report Number	:	ENB2404260134W00201R
Date(s) of Tests	:	April 26, 2024 to May 31, 2024
Date of issue	:	June 25, 2024

Table of Contents

1 TEST RESULT CERTIFICATION 3
2 EUT TECHNICAL DESCRIPTION 5
3 SUMMARY OF TEST RESULT 6
4 TEST METHODOLOGY 7
4.1 GENERAL DESCRIPTION OF APPLIED STANDARDS 7
4.2 MEASUREMENT EQUIPMENT USED 7
4.3 DESCRIPTION OF TEST MODES 8
4.4 TEST SOFTWARE 8
5 FACILITIES AND ACCREDITATIONS 9
5.1 FACILITIES 9
5.2 LABORATORY ACCREDITATIONS AND LISTINGS 9
6 TEST SYSTEM UNCERTAINTY 10
7 SETUP OF EQUIPMENT UNDER TEST 11
7.1 RADIO FREQUENCY TEST SETUP 1 11
7.2 RADIO FREQUENCY TEST SETUP 2 11
7.3 CONDUCTED EMISSION TEST SETUP 12
7.4 SUPPORT EQUIPMENT 13
8 FREQUENCY HOPPING SYSTEM REQUIREMENTS 14
8.1 STANDARD APPLICABLE 14
8.2 EUT PSEUDORANDOM FREQUENCY HOPPING SEQUENCE 14
8.3 EQUAL HOPPING FREQUENCY USE 15
8.4 FREQUENCY HOPPING SYSTEM 15
9 TEST REQUIREMENTS 16
9.1 20DB BANDWIDTH 16
9.2 CARRIER FREQUENCY SEPARATION 22
9.3 NUMBER OF HOPPING FREQUENCIES 28
9.4 AVERAGE TIME OF OCCUPANCY (DWELL TIME) 30
9.5 MAXIMUM PEAK CONDUCTED OUTPUT POWER 33
9.6 CONDUCTED SUPRIOUS EMISSION 39
9.7 RADIATED SPURIOUS EMISSION 46
9.8 CONDUCTED EMISSION TEST 59
9.9 ANTENNA APPLICATION 62

1 TEST RESULT CERTIFICATION

Applicant	:	Taylor-Listug, Inc.
Address	:	1980 Gillespie Way El Cajon, CA USA 92020
Manufacturer	:	Ningbo Tonwel Audio Equipments Co., Ltd.
Address	:	No.499 North Yingdong Road, Yinzhou Economic Development Zone, Zhanqi Town, Yinzhou District, Ningbo City, Zhejiang Province, China
EUT	:	Active speaker
Model Name	:	AV150-10
Trademark	:	N/A

Measurement Procedure Used:

APPLICABLE STANDARDS	
STANDARD	**TEST RESULT**
FCC 47 CFR Part 2, Subpart J FCC 47 CFR Part 15, Subpart C	PASS

The above equipment was tested by EMTEK (NINGBO) CO., LTD.The test data, data evaluation, test procedures, and equipment configurations shown in this report were made in accordance with the procedures given in ANSI C63.10 (2013) and the energy emitted by the sample EUT tested as described in this report is in compliance with the requirements of FCC Rules Part 2 and Part 15.247.

The test results of this report relate only to the tested sample identified in this report.

Date of Test : April 26, 2024 to May 31, 2024

Prepared by : June Gao /Engineer

Reviewer : Lucas Xu /Supervisor

Approve & Authorized Signer : Tony wei/Manager

Modified History

Version	Report No.	Revision Date	Summary
/	ENB2404260134W00201R	/	Original report

2 EUT TECHNICAL DESCRIPTION

Characteristics	Description
Product Name	Active speaker
Model number	AV150-10
Sample number	ENB2404260134W002-1-1
Device Type	Bluetooth V5.0
Data Rate	1Mbps for GFSK modulation 2Mbps for pi/4-DQPSK modulation 3Mbps for 8DPSK modulation
Modulation	GFSK pi/4-DQPSK 8DPSK
Operating Frequency Range	2402-2480MHz
Number of Channels	79 channels
Max Transmit Power	1.79 dBm
Antenna Type	PCB Antenna
Gain	1.7 dBi
Test Voltage	AC 120V, 60Hz
Temperature Range	-10℃ to +60℃
Date of Received	April 26, 2024

Note: for more details, please refer to the User's manual of the EUT.

3 SUMMARY OF TEST RESULT

FCC PartClause	Test Parameter	Verdict	Remark
15.247(a)(1)	20 dB Bandwidth	PASS	
15.247(a)(1)	Carrier Frequency Separation	PASS	
15.247(a)(1)	Number of Hopping Frequencies	PASS	
15.247(a)(1)	Average Time of Occupancy (Dwell Time)	PASS	
15.247(b)(1)	Maximum Peak Conducted Output Power	PASS	
15.247(c)	Conducted Spurious Emissions	PASS	
15.247(d) 15.209	Radiated Spurious Emissions	PASS	
15.207	Conducted Emission	PASS	
15.203	Antenna Application	PASS	
NOTE1:N/A (Not Applicable)			

RELATED SUBMITTAL(S) / GRANT(S):

This submittal(s) (test report) is intended for FCC ID: 2A75J-AV150-10A filing to comply with Section 15.247 of the FCC Part 15, Subpart C.

4 TEST METHODOLOGY

4.1 GENERAL DESCRIPTION OF APPLIED STANDARDS

According to its specifications, the EUT must comply with the requirements of the following standards:
FCC 47 CFR Part 2, Subpart J
FCC 47 CFR Part 15, Subpart C
FCC KDB 558074 D01 15.247 Meas Guidance v05r02

4.2 MEASUREMENT EQUIPMENT USED

4.2.1 Conducted Emission Test Equipment

Equ.No.	Equipment	Manufacturer	Model No.	Serial No.	Last Cal.	Cal. Interval
ENE-002	EMI Test Receiver	R & S	ESCI	101107	July 06, 2023	1 Year
ENE-003	L.I.S.N	R & S	ENV216	101193	July 06, 2023	1 Year
ENE-162-1	RF Cable	TIMES	2M(N-N)	605236-0001	May 31, 2023	1 Year
ENE-150	Conduction Test Room 2#	SKET	6.5*5*4m	/	Apr 17, 2023	3 Year

4.2.2 Radiated Emission Test Equipment

Equ. No.	Equipment	Manufacturer	Model No.	Serial No.	Last Cal.	Cal. Interval
ENE-186	EMI Test Receiver	R&S	ESR7	102487	Apr 25, 2024	1 Year
ENE-009	Pre-Amplifier	CD	PAP-0203	22015	July 06, 2023	1 Year
ENE-010	Bilog Antenna	Schwarzbeck	VULB 9163	9163-467	July 11, 2022	2 Year
ENE-061	Attenuator 6dB	Bracke	BM10008.6	N/A	July 06, 2023	1 Year
ENE-025-1	RF Cable	CD	CBL3-NN-3m	100319-2140500-1	Apr 14, 2024	1 Year
ENE-025-2	RF Cable	CD	CBL3-NN-0.5m	100319-2140500-2	Apr 14, 2024	1 Year
ENE-137-1	RF Cable	CD	CBL3-NN-6m	101216-2146000-1	Apr 14, 2024	1 Year
ENE-137-2	RF Cable	CD	CBL3-NN-6m	101216-2146000-2	Apr 14, 2024	1 Year
ENE-146	3-Meter Anechoic Chamber1#	SKET	9*6*6m	/	Apr 17, 2023	3 Year

4.2.3 Radio Frequency Test Equipment

Equ. No.	Equipment	Manufacturer	Model No.	Serial No.	Last Cal.	Cal. Interval
ENE-256	EXA Signal Anaalyzer	Keysight	N9010B	MY62060219	July 05, 2023	1 Year
ENE-172	RF Control Unit	Tonscend	JS0806-2(V.6E)	21L8060521	February 27, 2024	1 Year
ENE-092	DC Power Supply	KEFUNA	KDP3603	2004D3062946	July 07, 2023	1 Year

4.3 DESCRIPTION OF TEST MODES

The EUT has been tested under its typical operating condition.
The EUT configuration for testing is installed on RF field strength measurement to meet the Commissions requirement and operating in a manner which intends to maximize its emission characteristics in a continuous normal application.

The Transmitter was operated in the normal operating mode. The TX frequency was fixed which was for the purpose of the measurements.

Test of channel included the lowest and middle and highest frequency to perform the test, then record on this report.

Those data rates (1Mbps for Bluetooth GFSK modulation; 2Mbps for Bluetooth pi/4-DQPSK modulation; 3Mbps for Bluetooth 8DPSK) were used for all test.

Pre-defined engineering program for regulatory testing used to control the EUT for staying in continuous transmitting and receiving mode is programmed.

Frequency and Channel list for Bluetooth V5.0

Channel	Frequency (MHz)	Channel	Frequency (MHz)	Channel	Frequency (MHz)
0	2402	39	2441	…	…
1	2403	40	2442	76	2478
2	2404	41	2443	77	2479
…	…	…	…	78	2480
Note: fc=2402MHz+(k-1)×1MHz k=1 to 79					

Test Frequency and Channel for Bluetooth V5.0

Lowest Frequency		Middle Frequency		Highest Frequency	
Channel	Frequency (MHz)	Channel	Frequency (MHz)	Channel	Frequency (MHz)
0	2402	39	2441	78	2480

4.4 TEST SOFTWARE

Item	Software
Radiated Emission:	BT_Tool (V1.0.9)
Conducted Emission	BT_Tool (V1.0.9)

5 FACILITIES AND ACCREDITATIONS

5.1 FACILITIES

All measurement facilities used to collect the measurement data are located at

No. 8, Building 8, Lane 216, Qingyi Road, Ningbo Hi-Tech Zone, Ningbo, Zhejiang, China
The sites are constructed in conformance with the requirements of ANSI C63.7, ANSI C63.10 and CISPR Publication 32.

5.2 LABORATORY ACCREDITATIONS AND LISTINGS

Site Description

EMC Lab. : **Accredited by CNAS**
The Certificate Registration Number is L6666.
The Laboratory has been assessed and proved to be in compliance with CNAS-CL01:2018 (identical to ISO/IEC 17025:2017)

Designation by FCC
Designation Number: CN1354
Test Firm Registration Number: 427606

Accredited by A2LA
The certificate is valid until May 31, 2025

Accredited by Industry Canada
The Conformity Assessment Body Identifier is CN0114
Test Firm Registration Number: 9469A

Name of Firm : EMTEK (NINGBO) CO., LTD.
Site Location : No. 8, Building 8, Lane 216, Qingyi Road, Ningbo Hi-Tech Zone, Ningbo, Zhejiang, China

6 TEST SYSTEM UNCERTAINTY

The following measurement uncertainty levels have been estimated for tests performed on the apparatus:

Parameter	Uncertainty
Radio Frequency	±1x10^-5
Maximum Peak Output Power Test	±1.0dB
Conducted Emissions Test	±2.0dB
Radiated Emission Test	±2.0dB
Occupied Bandwidth Test	±1.0dB
Band Edge Test	±3dB
All emission, radiated	±3dB
Antenna Port Emission	±3dB
Temperature	±0.5℃
Humidity	±3%

Measurement Uncertainty for a level of Confidence of 95%

7 SETUP OF EQUIPMENT UNDER TEST

7.1 RADIO FREQUENCY TEST SETUP 1

The Bluetooth component's antenna ports(s) of the EUT are connected to the measurement instrument per an appropriate attenuator. The EUT is controlled by PC/software to emit the specified signals for the purpose of measurements.

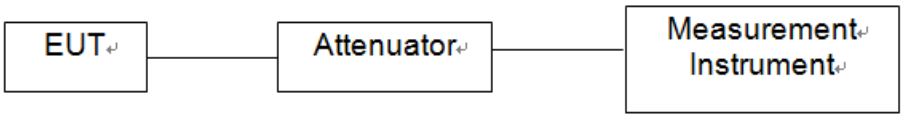

7.2 RADIO FREQUENCY TEST SETUP 2

The test site semi-anechoic chamber has met the requirement of NSA tolerance 4 dB according to the standards: ANSI C63.10. The test distance is 3m.The setup is according to the requirements in Section 13.1.4.1 of ANSI C63.10-2014 and CAN/CSA-CEI/IEC CISPR 22.

Below 30MHz：

The EUT is placed on a turntable 0.8 meters above the ground in the chamber, 3 meter away from the antenna (loop antenna). The Antenna should be positioned with its plane vertical at the specified distance from the EUT androtated about its vertical axis formaximum response at each azimuth about the EUT. The center of the loopshall be 1 m above the ground.For certain applications, the loop antennaplane may also need to be positioned horizontally at the specified distance from the EUT.

30MHz-1GHz：

The EUT is placed on a turntable 0.8 meters above the ground in the chamber, 3 meter away from the antenna. The maximal emission value is acquired by adjusting the antenna height, polarisation and turntable azimuth. Normally, the height range of antenna is 1 m to 4 m, the azimuth range of turntable is 0° to 360°, and the receive antenna has two polarizations Vertical (V) and Horizontal (H).

Above 1GHz：

The EUT is placed on a turntable 1.5 meters above the ground in the chamber, 3 meter away from the antenna. The maximal emission value is acquired by adjusting the antenna height, polarisation and turntable azimuth. Normally, the height range of antenna is 1 m to 4 m, the azimuth range of turntable is 0° to 360°, and the receive antenna has two polarizations Vertical (V) and Horizontal (H).

(a) Radiated Emission Test Set-Up, Frequency Below 30MHz

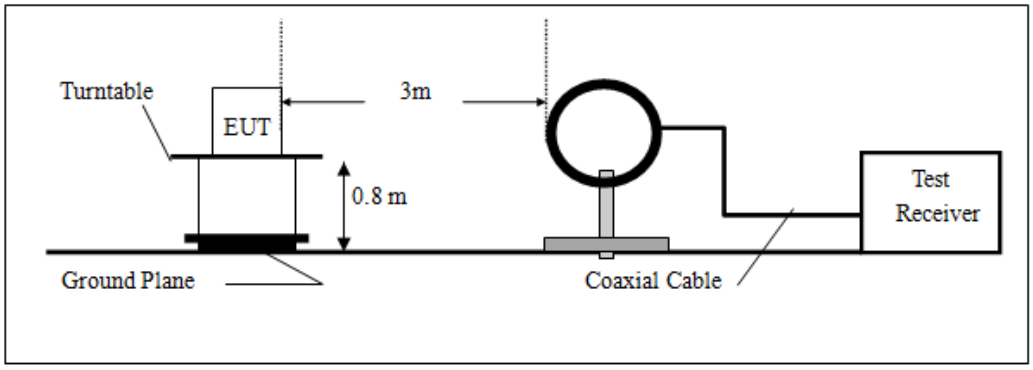

(b)Radiated Emission Test Set-Up, Frequency Below 1000MHz

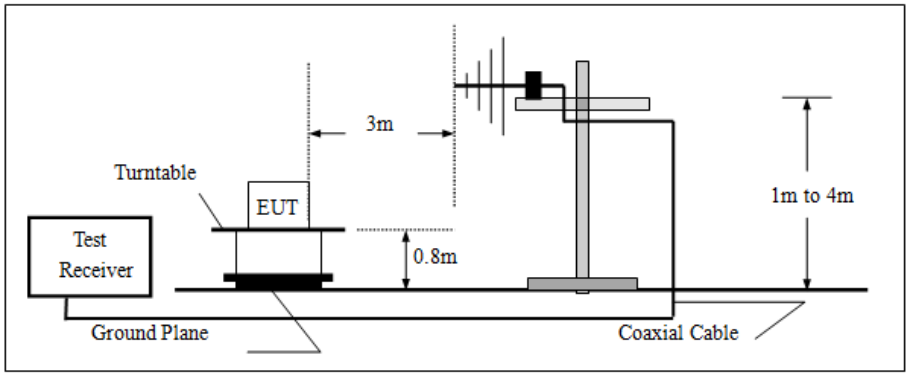

(c) Radiated Emission Test Set-Up, Frequency above 1000MHz

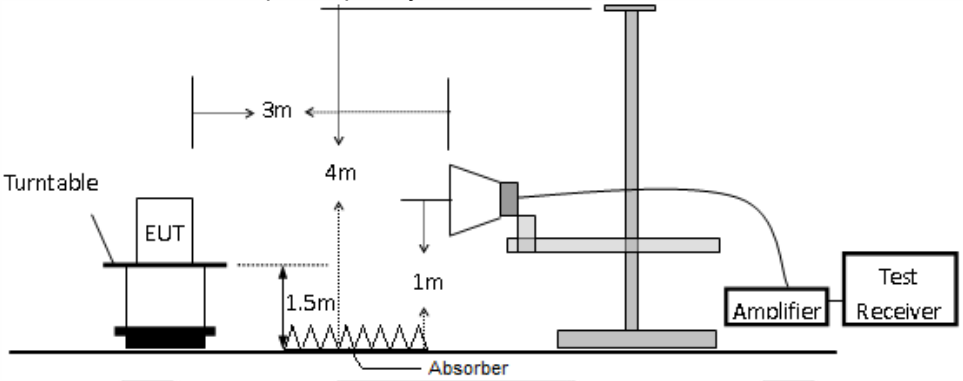

7.3 CONDUCTED EMISSION TEST SETUP

The mains cable of the EUT (Game fitness board) must be connected to LISN. The LISN shall be placed 0.8 m from the boundary of EUT and bonded to a ground reference plane for LISN mounted on top of the ground reference plane. This distance is between the closest points of the LISN and the EUT. All other units of the EUT and associated equipment shall be at least 0.8m from the LISN.
Ground connections, where required for safety purposes, shall be connected to the reference ground point of the LISN and, where not otherwise provided or specified by the manufacturer, shall be of same length as the mains cable and run parallel to the mains connection at a separation distance of not more than 0.1 m.
According to the requirements in Section 13.1.4.1 of ANSI C63.10-2014 Conducted emissions from the EUT measured in the frequency range between 0.15 MHz and 30 MHz using CISPR Quasi-Peak and average detector mode.

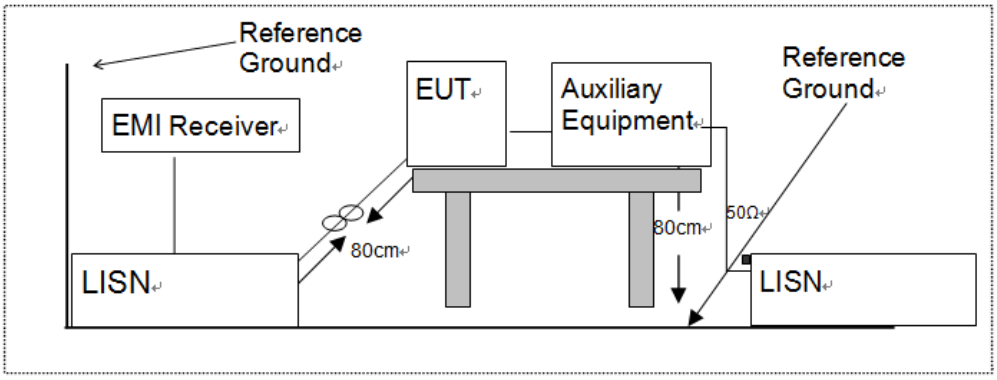

7.4 SUPPORT EQUIPMENT

EUT Cable List and Details			
Cable Description	Length (m)	Shielded/Unshielded	With / Without Ferrite
/	/	/	/

Auxiliary Cable List and Details			
Cable Description	Length (m)	Shielded/Unshielded	With / Without Ferrite
/	/	/	/

Auxiliary Equipment List and Details			
Description	Manufacturer	Model	Serial Number
/	/	/	/

Notes:

1. *All the equipment/cables were placed in the worst-case configuration to maximize the emission during the test.*
2. *Grounding was established in accordance with the manufacturer's requirements and conditions for the intended use.*

8 FREQUENCY HOPPING SYSTEM REQUIREMENTS

8.1 Standard Applicable

According to FCC Part 15.247(a)(1), The system shall hop to channel frequencies that are selected at the system hopping rate from a pseudo randomly ordered list of hopping frequencies. Each frequency must be used equally on the average by each transmitter. The system receivers shall have input bandwidths that match the hopping channel bandwidths of their corresponding transmitters and shall shift frequencies in synchronization with the transmitted signals.

(g) Frequency hopping spread spectrum systems are not required to employ all available hopping channels during each transmission. However, the system, consisting of both the transmitter and the receiver, must be designed to comply with all of the regulations in this section should the transmitter be presented with a continuous data (or information) stream. In addition, a system employing short transmission bursts must comply with the definition of a frequency hopping system and must distribute its transmissions over the minimum number of hopping channels specified in this section.

(h) The incorporation of intelligence within a frequency hopping spread spectrum system that permits the system to recognize other users within the spectrum band so that it individually and independently chooses and adapts its hopsets to avoid hopping on occupied channels is permitted. The coordination of frequency hopping systems in any other manner for the express purpose of avoiding the simultaneous occupancy of individual hopping frequencies by multiple transmitters is not permitted.

8.2 EUT Pseudorandom Frequency Hopping Sequence

The channel is represented by a pseudo-random hopping sequence hopping through the 79 RF channels.
The hopping sequence is unique for the piconet and is determined by the Bluetooth device address of the master; thephase in the hopping sequence is determined by the Bluetooth clock of the master.The channel is divide into time slots where each slot corresponds to an RF hop frequency. Consecutive hopscorrespond to different RF hop frequencies. The normal hop is 1 600 hops/s.

The pseudorandom sequence may be generated in a nine-stage shift register whose 5th and 9th stage outputs are added in a modulo-two addition stage, and the result is fed back to the input of the first stage. The sequence begins with the first ONE of 9 consecutive ONEs; i.e. the shift register is initialized with nine ones. Number of shift register stages: 9
Length of pseudo-random sequence: 29-1 = 524 bits
Longest sequence of zeros: 8 (non-inverted signal)

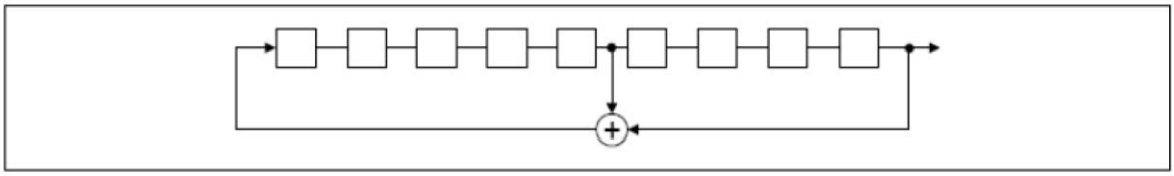

Linear Feedback Shift Register for Generation of the PRBS sequence

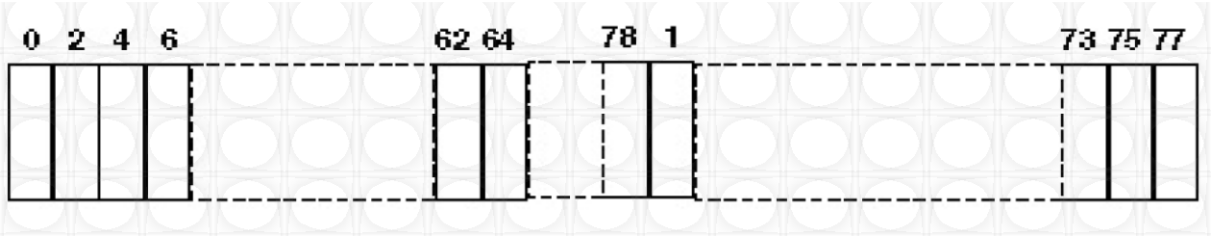

Each frequency used equally on the average by each transmitter.
The system receiver have input bandwidths that match the hopping channel bandwidths of their corresponding transmitters and shift frequencies in synchronization with the transmitted signals.

8.3 Equal Hopping Frequency Use

All Bluetooth units participating in the piconet are time and hop-synchronized to the channel.

Example of a 79 hopping sequence in data mode:
35, 27, 6, 44, 14, 61, 74, 32, 1, 11, 23, 2, 55, 65, 29, 3, 9, 52, 78, 58, 40, 25, 0, 7, 18, 26, 76, 60, 47, 50, 2, 5, 16, 37, 70, 63, 66, 54, 20, 13, 4, 8, 15, 21, 26, 10, 73, 77, 67, 69, 43, 24, 57, 39, 46, 72, 48, 33, 17, 31, 75, 19, 41, 62, 68, 28, 51, 66, 30, 56, 34, 59, 71, 22, 49, 64, 38, 45, 36, 42, 53
Each Frequency used equally on the average by each transmitter

8.4 Frequency Hopping System

This transmitter device is frequency hopping device, and complies with FCC part 15.247 rule.

This device uses Bluetooth radio which operates in 2400-2483.5 MHz band. Bluetooth uses a radio technology called frequency-hopping spread spectrum, which chops up the data being sent and transmits chunks of it on up to 79 bands (1 MHz each; centred from 2402 to 2480 MHz) in the range 2,400-2,483.5 MHz. The transmitter switches hop frequencies 1,600 times per second to assure a high degree of data security. All Bluetooth devices participating in a given piconet are synchronized to the frequency-hopping channel for the piconet. The frequency hopping sequence is determined by the master's device address and the phase of the hopping sequence (the frequency to hop at a specific time) is determined by the master's internal clock. Therefore, all slaves in a piconet must know the master's device address and must synchronize their clocks with the master's clock.

Adaptive Frequency Hopping (AFH) was introduced in the Bluetooth specification to provide an effective way for a Bluetooth radio to counteract normal interference. AFH identifies "bad" channels, where either other wireless devices are interfering with the Bluetooth signal or the Bluetooth signal is interfering with another device. The AFH- enabled Bluetooth device will then communicate with other devices within its piconet to share details of any identified bad channels. The devices will then switch to alternative available "good" channels, away from the areas of interference, thus having no impact on the bandwidth used.

9 TEST REQUIREMENTS

9.1 20DB BANDWIDTH

Applicable Standard

According to FCC Part 15.247(a)(1) and 558074 D01 15.247 Meas Guidance V05r02

Conformance Limit

No limit requirement.

Test Configuration

Test according to clause 7.1 radio frequency test setup 1

Test Procedure

The EUT was operating in Bluetooth V5.0 and controlled its channel. Printed out the test result from the spectrum by hard copy function.
The RF output of EUT was connected to the spectrum analyzer by RF cable and attenuator. The path loss was compensated to the results for each measurement.
Set to the maximum power setting and enable the EUT transmit continuously
Set RBW = 30 kHz.
Set the video bandwidth (VBW) =100kHz.
Set Span= approximately 2 to 3 times the 20 dB bandwidth
Set Detector = Peak.
Set Trace mode = max hold.
Set Sweep = auto couple.
The EUT should be transmitting at its maximum data rate. Allow the trace to stabilize.Use the marker-to-peak function to set the marker to the peak of the emission. Use themarker-delta function to measure 20 dB down one side of the emission. Reset the markerdeltafunction, and move the marker to the other side of the emission, until it is (asclose as possible to) even with the reference marker level. The marker-delta reading atthis point is the 20 dB bandwidth of the emission.
If this value varies with differentmodes of operation (e.g., data rate, modulation format, etc.), repeat this test for eachvariation.
Measure and record the results in the test report.

Test Results

Temperature:	22 ℃	Test Date:	May 16, 2024
Humidity:	53 %	Test By:	Lucas Xu

Modulation Mode	Channel Number	Channel Frequency (MHz)	20dB Bandwidth (MHz)
GFSK	0	2402	0.8768
	39	2441	0.9393
	78	2480	0.9488
pi/4-DQPSK	0	2402	1.2680
	39	2441	1.3330
	78	2480	1.3220
8DPSK	0	2402	1.2150
	39	2441	1.2920
	78	2480	1.2920

Test Model	20dB Bandwidth	
	Channel 0: 2402MHz	GFSK Modulation

Test Model	20dB Bandwidth	
	Channel 39: 2441MHz	GFSK Modulation

Test Model	20dB Bandwidth	
	Channel 78: 2480MHz	GFSK Modulation

Test Model	20dB Bandwidth	
	Channel 0: 2402MHz	pi/4-DQPSK Modulation

Test Model	20dB Bandwidth	
	Channel 39: 2441MHz	pi/4-DQPSK Modulation

Test Model	20dB Bandwidth	
	Channel 78: 2480MHz	pi/4-DQPSK Modulation

Test Model	20dB Bandwidth	
	Channel 0: 2402MHz	8DPSK Modulation

Test Model	20dB Bandwidth	
	Channel 39: 2441MHz	8DPSK Modulation

Test Model	20dB Bandwidth	
	Channel 78: 2480MHz	8DPSK Modulation

9.2 CARRIER FREQUENCY SEPARATION

Applicable Standard

According to FCC Part 15.247(a)(1) and 558074 D01 15.247 Meas Guidance V05r02

Conformance Limit

Frequency hopping systems operating in the 2400-2483.5MHz band shall have hoppingchannel carrier frequencies separated by a minimum of 25kHz or the 20dB bandwidth ofthe hopping channel, whichever is greater.
In case of an output power less than 125mW,the frequency hopping system may have channels separated by a minimum of 25kHz ortwo-thirds of the 20dB bandwidth of the hopping channel, whichever is greater.

Test Configuration

Test according to clause 7.1 radio frequency test setup 1

Test Procedure

■ According to FCC Part15.247(a)(1)
The EUT must have its hopping function enabled. Use the following spectrum analyzersettings:
Set the RBW =100kHz. Set VBW =300kHz.
Set the span = wide enough to capture the peaks of two adjacent channels
Set Sweep time = auto couple.
Set Detector = peak. Set Trace mode = max hold.
Allow the trace to stabilize. Use the marker-delta function to determine the separation between the peaks of the adjacent channels. The limit is specified in one of the subparagraphs of this Section. Submit this plot.

Test Results

Temperature:	22 ℃	Test Date:	May 16, 2024
Humidity:	53 %	Test By:	Lucas Xu

Modulation Mode	Channel Number	Channel Frequency (MHz)	Measurement Bandwidth (MHz)	Limit (MHz)	Verdict
GFSK	0	2402	0.999	＞0.58	PASS
	39	2441	0.990	＞0.63	PASS
	78	2480	0.987	＞0.63	PASS
pi/4-DQPSK	0	2402	1.002	＞0.85	PASS
	39	2441	0.999	＞0.89	PASS
	78	2480	0.993	＞0.89	PASS
8DPSK	0	2402	1.002	＞0.81	PASS
	39	2441	0.999	＞0.86	PASS
	78	2480	0.999	＞0.86	PASS
Note: Limit = 20dB bandwidth * 2/3, if it is greater than 25kHz and the output power is less than 125mW (21dBm).					

Test Model	Carrier Frequency Separation	
	Channel 0: 2402MHz	GFSK Modulation

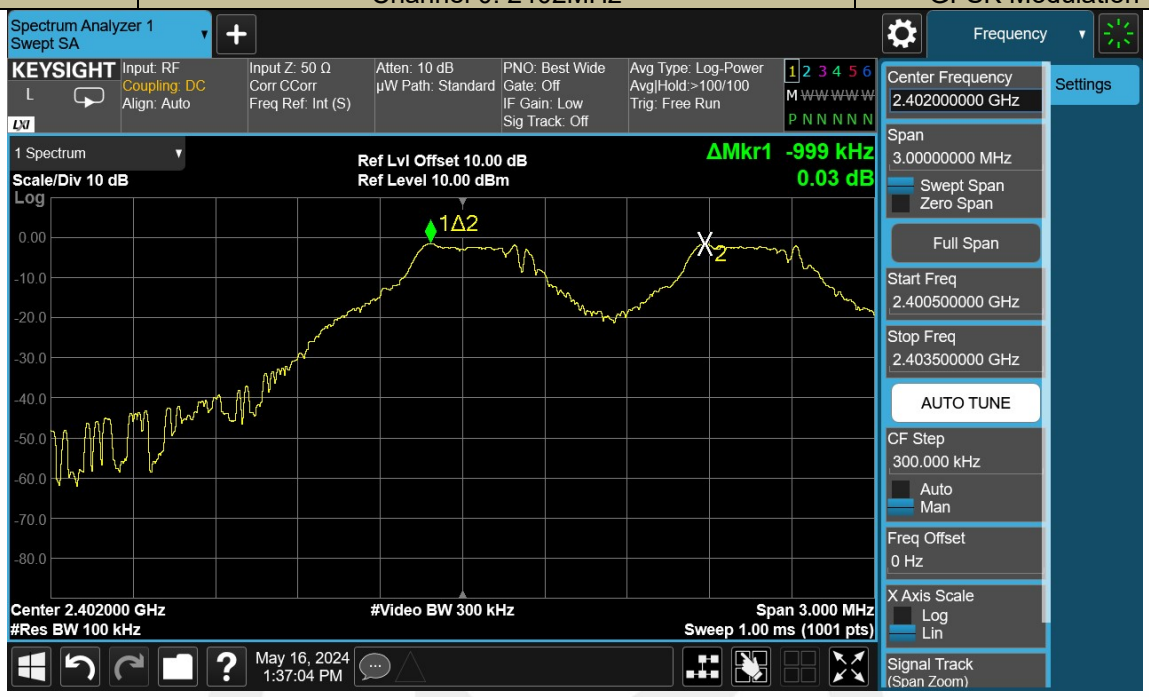

Test Model	Carrier Frequency Separation	
	Channel 39: 2441MHz	GFSK Modulation

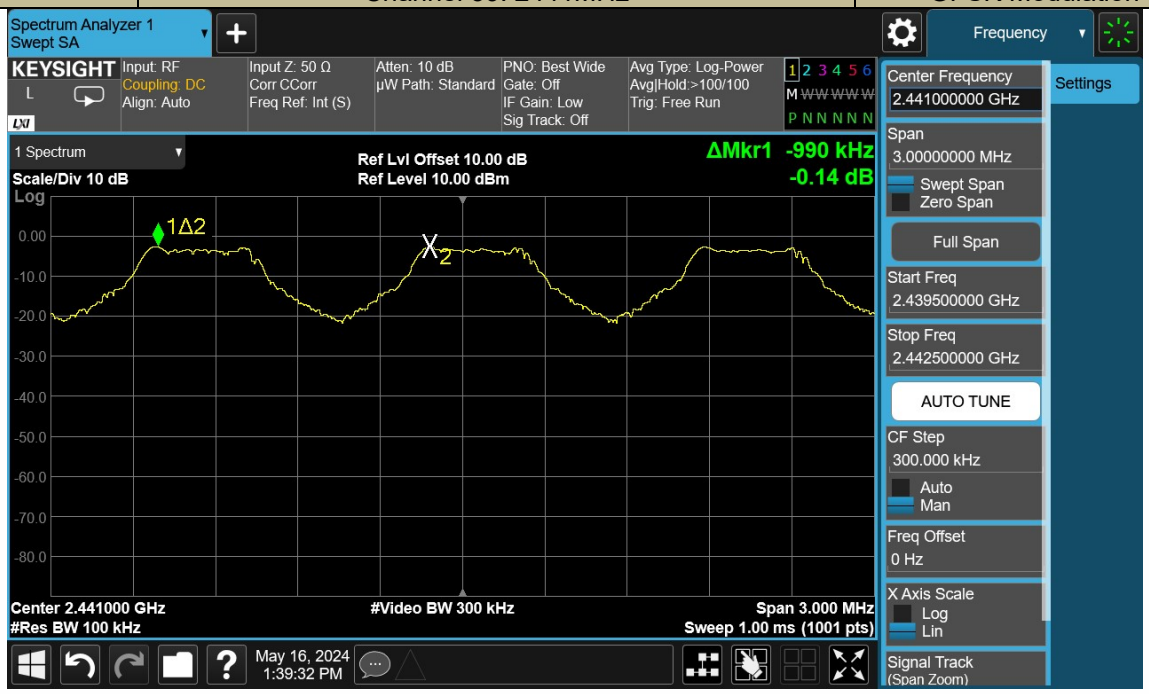

Test Model	Carrier Frequency Separation	
	Channel 78: 2480MHz	GFSK Modulation

Test Model	Carrier Frequency Separation	
	Channel 0: 2402MHz	pi/4-DQPSK Modulation

Test Model	Carrier Frequency Separation	
	Channel 39: 2441MHz	pi/4-DQPSK Modulation

Test Model	Carrier Frequency Separation	
	Channel 78: 2480MHz	pi/4-DQPSK Modulation

Test Model	Carrier Frequency Separation	
	Channel 0: 2402MHz	8DPSK Modulation

Test Model	Carrier Frequency Separation	
	Channel 39: 2441MHz	8DPSK Modulation

Test Model	Carrier Frequency Separation	
	Channel 78: 2480MHz	8DPSK Modulation

9.3 NUMBER OF HOPPING FREQUENCIES

Applicable Standard

According to FCC Part 15.247(a)(1) (iii)and 558074 D01 15.247 Meas Guidance V05r02

Conformance Limit

Frequency hopping systems operating in the 2400-2483.5MHz band shall use at least15 channels.

Test Configuration

Test according to clause 7.1 radio frequency test setup 1

Test Procedure

■ According to FCC Part15.247(a)(1)(iii)
The EUT must have its hopping function enabled. Use the following spectrum analyzer settings:
Span = the frequency band of operation
RBW = 100kHz
VBW ≥ RBW
Sweep = auto
Detector function = peak
Trace = max hold
Allow the trace to stabilize. It may prove necessary to break the span up to sections, inorder to clearly show all of the hopping frequencies.

Test Results

Temperature:	22 ℃	Test Date:	May 16, 2024
Humidity:	53 %	Test By:	Lucas Xu

Hopping Channel Frequency Range	Quantity of Hopping Channel	Quantity of Hopping Channel limit
2402-2480 (GFSK)	79	＞15
Note: Note: Both BR & EDR mode has same result .		

Test Model	Number Of Hopping Frequencies	
	Span:2400-2483.5MHz	GFSK

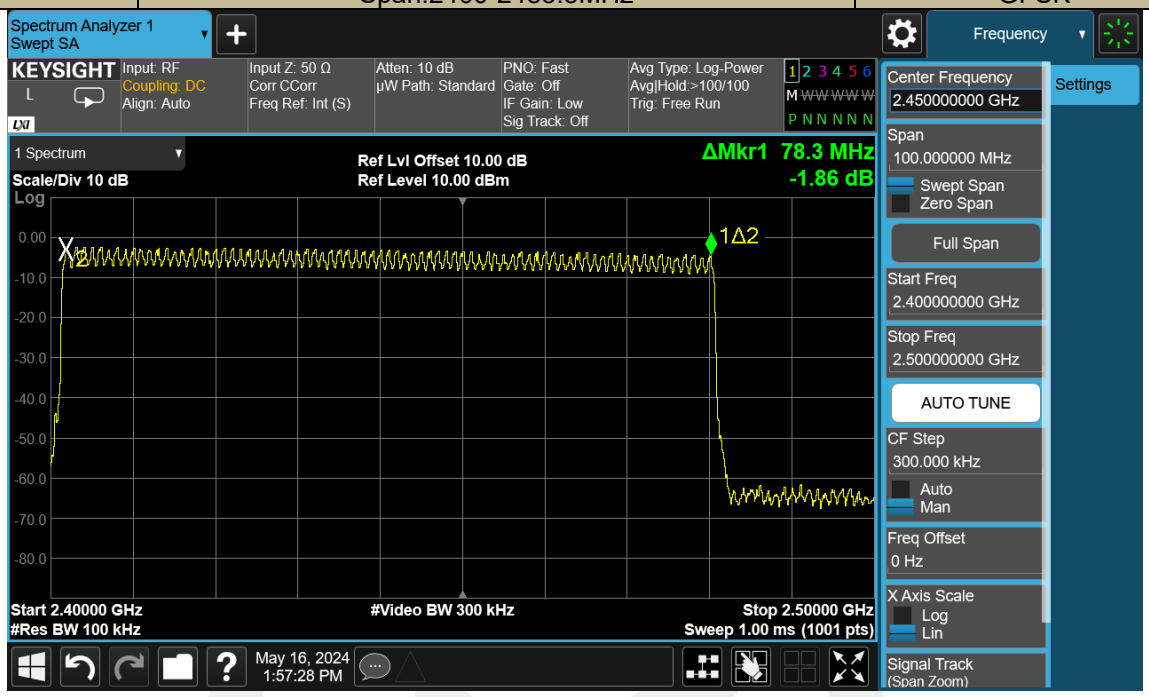

9.4 AVERAGE TIME OF OCCUPANCY (DWELL TIME)

Applicable Standard

According to FCC Part 15.247(a)(1)(iii) and 558074 D01 15.247 Meas Guidance V05r02

Conformance Limit

For frequency hopping systems operating in the 2400-2483.5MHz band, the averagetime of occupancy on any channel shall not be greater than 0.4s within a period of 0.4smultiplied by the number of hopping channels employed.

Test Configuration

Test according to clause 7.1 radio frequency test setup 1

Test Procedure

■ According to FCC Part15.247(a)(1)(iii)
The EUT must have its hopping function enabled. Use the following spectrum analyzersettings:
Span = zero span, centered on a hopping channel
RBW = 1 MHz
VBW ≥ RBW
Sweep = as necessary to capture the entire dwell time per hopping channel
Detector function = peak
Trace = max hold
If possible, use the marker-delta function to determine the dwell time. If this value varies with different modes of operation (e.g., data rate, modulation format, etc.), repeat this test for each variation. The limit is specified in one of the subparagraphsof this Section.

Test Results

Temperature:	22 ℃	Test Date:	May 16, 2024
Humidity:	53 %	Test By:	Lucas Xu

Modulation Mode	Channel Number	Packet type	Pluse width (ms)	DwellTime (ms)	Limit (ms)	Verdict
GFSK	0	DH1	0.385	123.20	<400	PASS
	0	DH3	1.638	262.08	<400	PASS
	0	DH5	2.884	307.63	<400	PASS

Note1: DwellTime(DH1)=PW*(1600/2/79)*31.6
DwellTime(DH3)=PW*(1600/4/79)*31.6
DwellTime(DH5)=PW*(1600/6/79)*31.6
Note2: Bluetooth (GFSK, pi/4-DQPSK, 8DPSK)mode have been tested, and the worst results has been recorded on the follow page.

Test Model	Average Time Of Occupancy (Dwell Time)	
	CH 0: 2402MHz	GFSK DH1

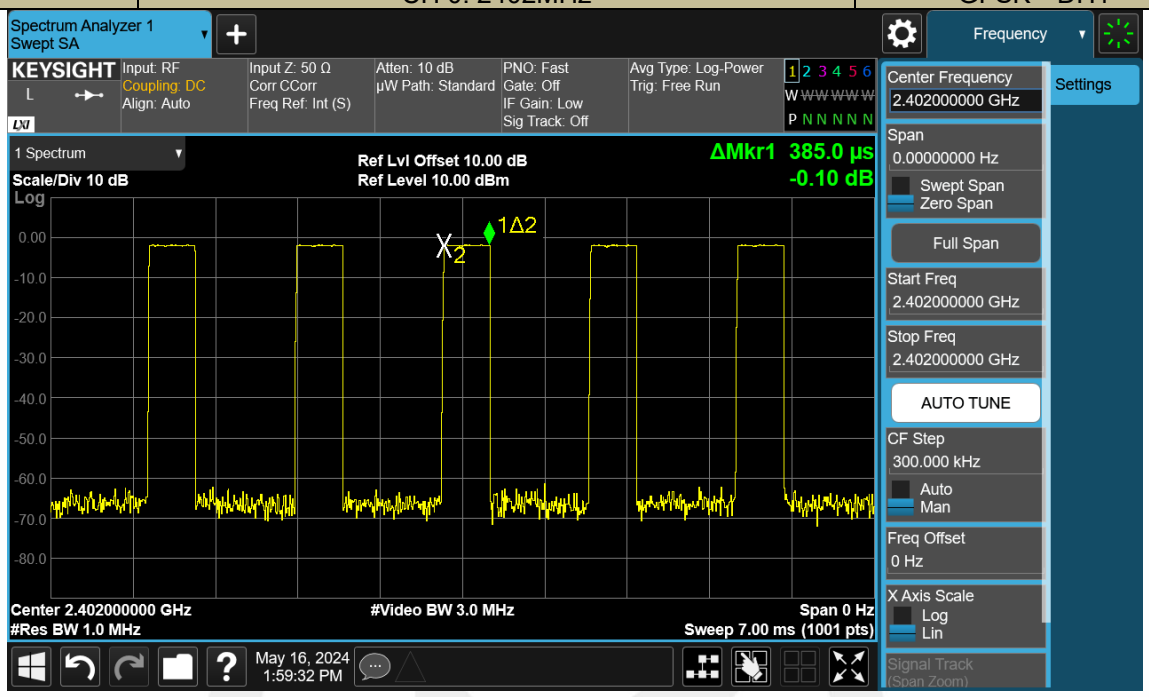

Test Model	Average Time Of Occupancy (Dwell Time)	
	CH 0: 2402MHz	GFSK DH3

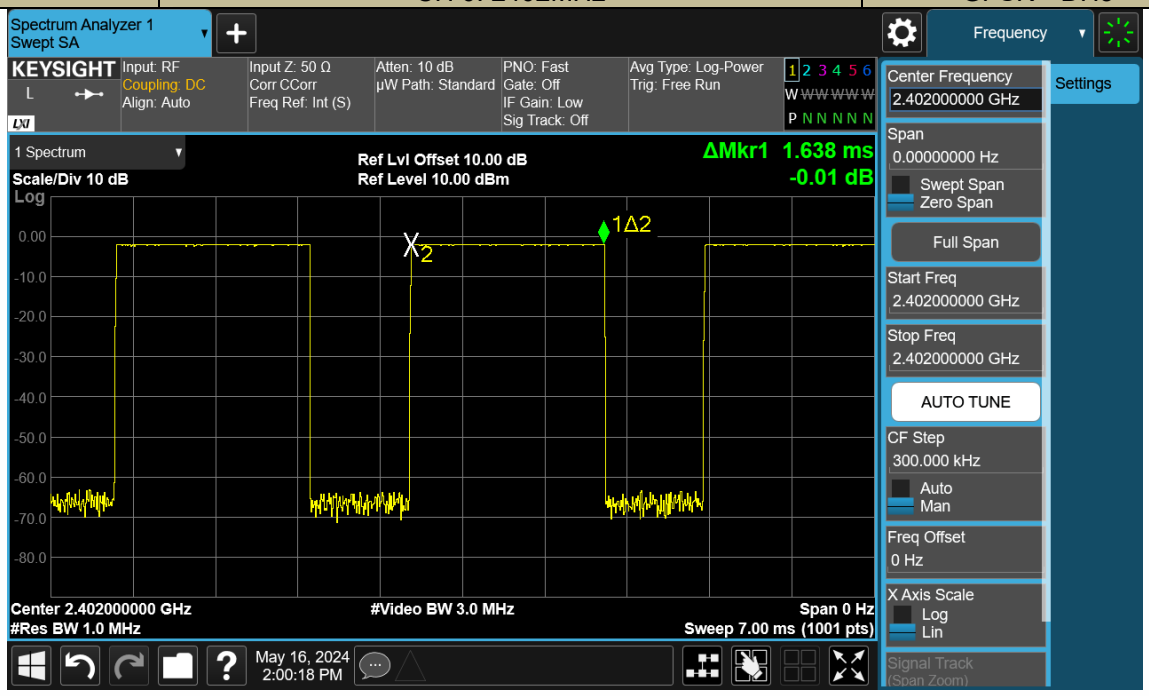
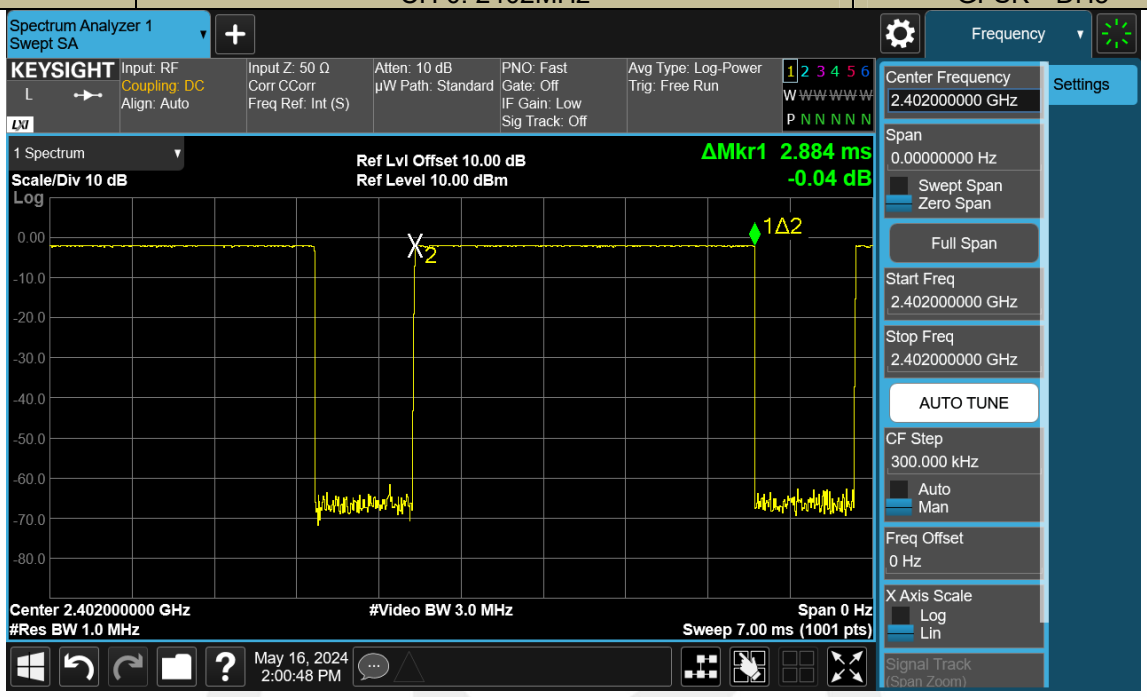
Test Model	Average Time Of Occupancy (Dwell Time)	
	CH 0: 2402MHz	GFSK DH5