YSA-033 48V

electric mini car

Assembly & User Instructions - Please keep for future reference

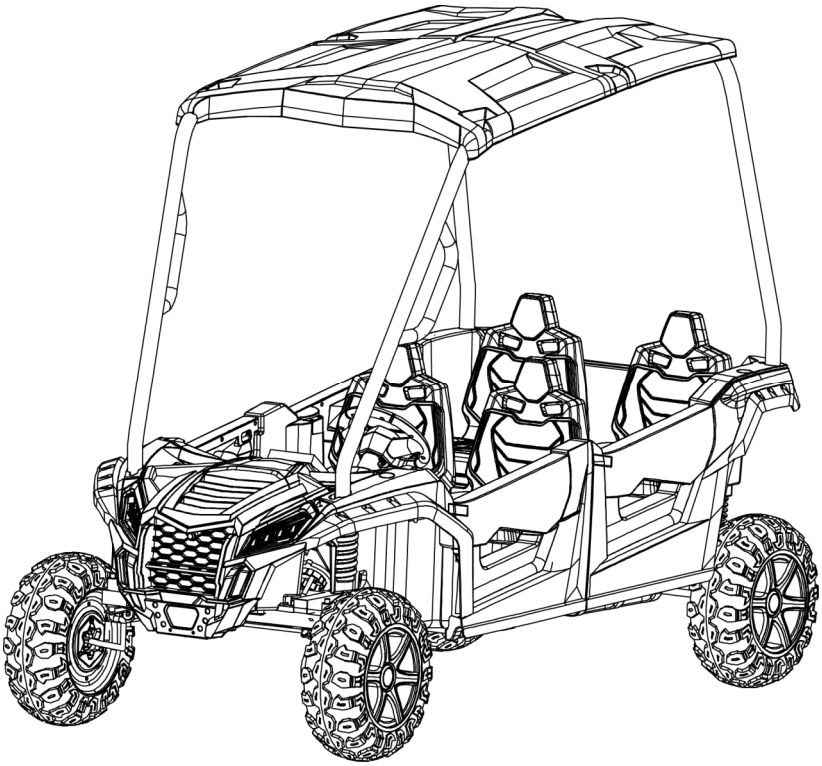

Picture for reference only. Please refer to real object.

ASTM-F963

Important	Warning!
Age: 14Years + Maximum user weight: 120kg	1. For family and domestic use only 2. Not to be used in traffic 3. Adult assembly required

Important - Please read these instructions fully before assembly or use

These instructions contain important information which will help you to get the best from your product and ensure safe and correct assembly, use and maintance.

Table of Contents

1. About Your New Vehicle

2. Safety Information

3. Parts List

4. Parts Diagram

5. Assembly Steps

6. How To Operate Your Vehicle

7. Charging The Vehicle

8.. Troubleshooting Guide

9. Maintaining Your Vehicle

10.Disposal Of Battery

About Your New Vehicle

Thank you for purchasing our products, we want your friend to enjoy this product for years to come.

Keep these points in mind as you read this guide:

Suitable age:	14^{+} years	**Battery:**	48V14 ah ∗1 / 24V14Ah *2
Load Capacity:	Under 120Kg	**Motor:**	48V600W
Speed:	8-15Km/h	**Charging time:**	6-9hours
Material:	PP	**Optimum Temperature:**	Below 40°C Avoid to use under burning sun
Charger:	48V2A∗1		
	Output: 48V		
	Current: 2000mA		

Safety Information

⚠ WARNING!

• General safety:

• Where products need assembly they must always be assembled by an adult.As a parent/carer, it is also your responsibility to check the tightness of screws, nuts and bolts before each use and if necessary, adjust and re-tighten.
• This product may contain small parts and it is your responsibility as a parent/carer to exclude children from the area during assembly due to small parts.
• Remember to retain these instructions for future reference.
• We have tried to make our toys as simple as possible to assemble but inevitably there will be one or two slightly more complex tasks.

Positioning :

- Do not ride at night or in poor light conditions.
- Do not play near steps, swimming pools / spas or other sources of water, on slopes,on streets or around cars, even if parked on your own property.
- It is prohibited to drive/use this product on the public highway.
- This product is designed to be used on smooth surfaces and should not be used on soft ground or in the rain or snow.

Before use:

• Very Important. You Must Charge & Connect The Battery Before First Use.
• Check tightness of all components.

During use:

- This product is only suitable14 years and older.
- The toy should be used with caution since skill is required to avoid falls or collisions causing injury to the user or third parties.
- The maximum rider weight capacity for this product is 120Kg. Do not overload.
- Ensure the child keeps clothing, hands, hair,fingers and feet away from moving parts.
- The use of protective gear including approved helmets, gloves and pad is recommended.
- Store this product at room temperature; do not leave it outside or uncared for.
- Never let any child play with the battery or charger at any time, or let them charge the product.
- Do not use if product is faulty or damaged.
- Do not tamper with the battery or electrical parts inside the product.

Safety Information

⚠ WARNING!

- **Charging the battery:**

- All charging and re-charging must be carried out by an adult.
- Do not attempt to use the product while it is being charged.
- Charging should be carried out under cover and in a well-ventilated area.
- Always ensure the charger is switched off before connecting it to the product/battery.
- Always ensure the charger is plugged into a wall outlet .Do not use an extension.
- Do not charge near sources of potential sparks, fires or flames or where flammable gases, liquids and materials are stored.
- During charging the battery and the charger may get hot.
- Only charge the battery for a maximum time of 6 - 9 hours.
- Do not leave the charger plugged into an outlet or connected to the product/battery once charging is completed.
- Never attempt to recharge a fully charged or partially used battery for an extra boost.
- Do not over-charge; this action will significantly shorten battery life.
- Always ensure that once the battery becomes discharged/flat that you re-charge for the recommended time. Failing to do so will significantly shorten battery life.
- Charging the product below 4°C (40°F) or above 40°C (104°F) will decrease the battery life significantly.
- V.R.L.A. batteries are heavy and contain lead & acid. They are dangerous if improperly handled.
- Only use the charger supplied with the product.The use of other chargers may cause damage to the battery and/or cause explosion.
- Battery chargers used with the toy are to be regularly examined for damage to the cord, plug,enclosure and other parts, and in the event of such damage, they must not be used until the damage has been repaired.
- Only use the battery supplied with this product.The use of other batteries may cause damage to the motor, charger and subsequent wiring,which could lead to fire and/or explosion.
- Exhausted batteries are to be removed from the toy.
- Always ensure that you connect the battery with the correct polarity.
- Never short-circuit the terminals of the battery,or any subsequent wiring.
- Never bypass or bridge a broken/blown fuse or circuit breaker and always replace with the same type/value and model.

Parts List

PART NO	PART NAME	PICTURE	Q'ty (pcs)	REMARKS	PART NO	PART NAME	PICTURE	Q'ty (pcs)	REMARKS
1	Vehicle body	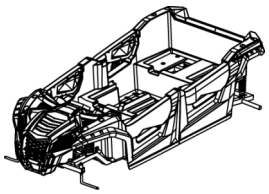	1		2	Windshield bar	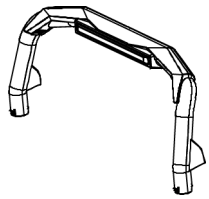	1	
3	Seat	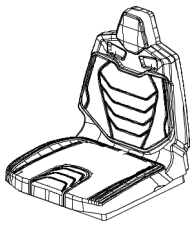	2		4	Guide frame A	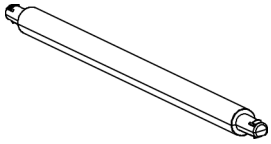	1	
5	Guide frame B	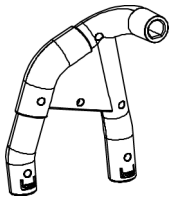	1	right	6	Guide frame B	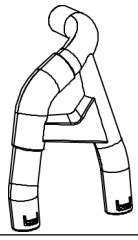	1	Left
7	Driving wheel		2		8	Wheel	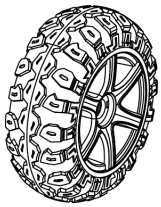	2	
9	Wheel hub		1		10	Steering wheel	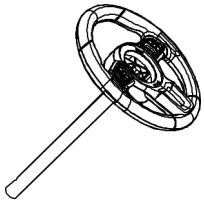	1	
11	Cover		1		12	Bolt	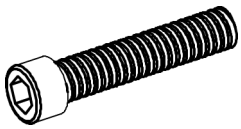	4	Placed in the rear and front axle
13	Screw	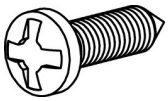	2	Placed in the body	14	Washer	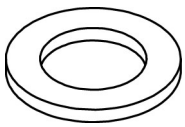	6	Placed in the rear and front axle

Parts List

PART NO	PART NAME	PICTURE	Q'ty (pcs)	REMARKS	PART NO	PART NAME	PICTURE	Q'ty (pcs)	REMARKS
15	Instruction manual		1		16	Charger	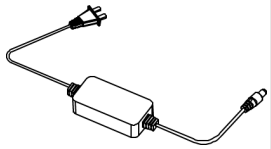	1	
17	Spanner A	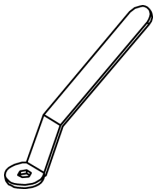	1		18	M6 Spanner	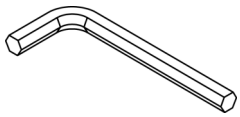	1	

PART NO	PART NAME	PICTURE	Q'ty (pcs)	REMARKS	PART NO	PART NAME	PICTURE	Q'ty (pcs)	REMARKS
	Support column 1		1	optional	14	Support column 2		1	optional
	Support column 3		1	optional		Support column 4		1	optional
	Front plug	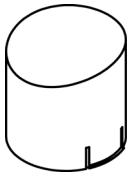	2	optional		Rear plug	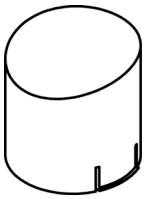	2	optional
	Auto Roof	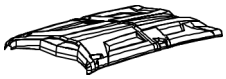	1	optional		Screw		20	optional

Parts Diagram

1	Vehicle body ∗1	2	Windshield bar ∗1
3	Seat ∗4	4	Guide frame A ∗1
5	Guide frame B∗1	6	Guide frame B ∗1
7	Driving wheel∗2	8	Wheel ∗2
9	Wheel hub ∗4	10	Steering wheel ∗1
11	Cove r ∗1	12	Bolt∗4
13	Screw ∗2	14	Washer∗6

NOTE: Some Parts Shown are assembled on both sides of vehicle

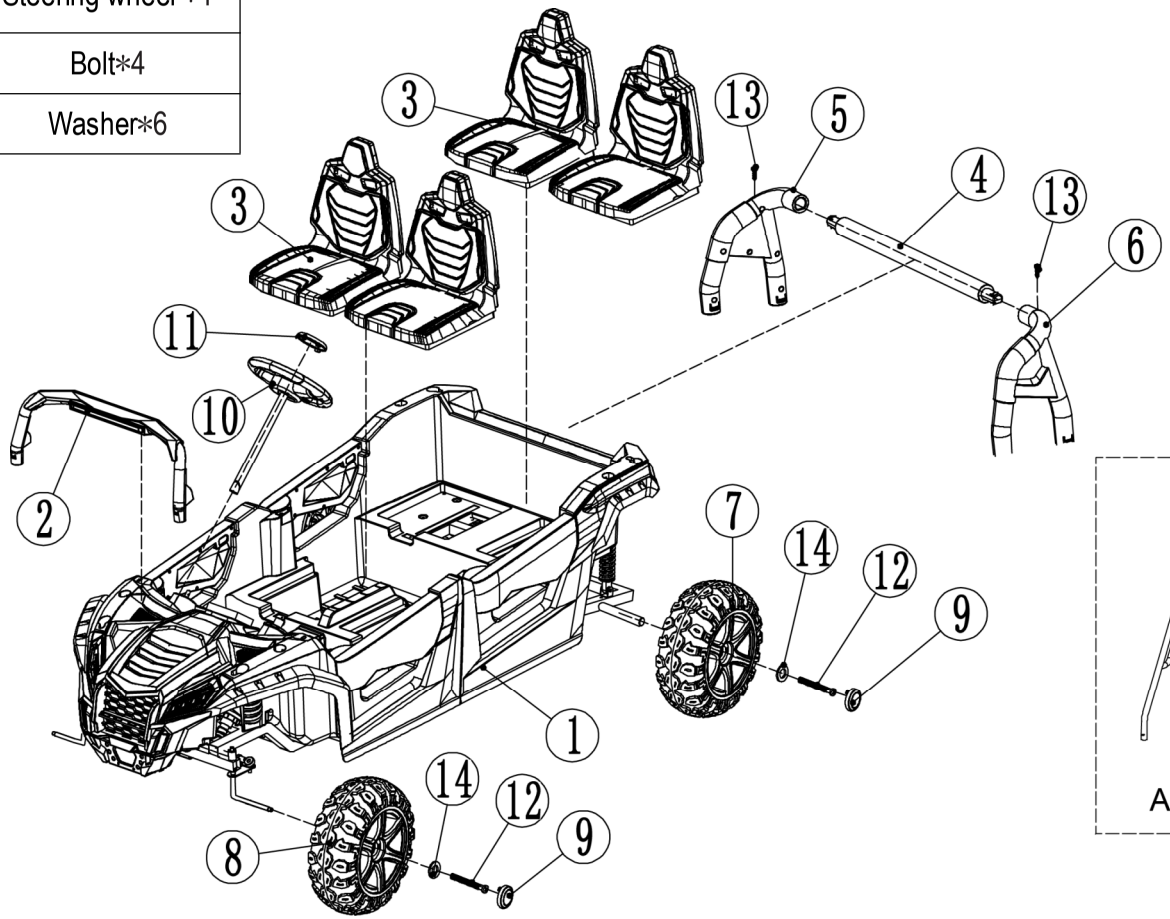

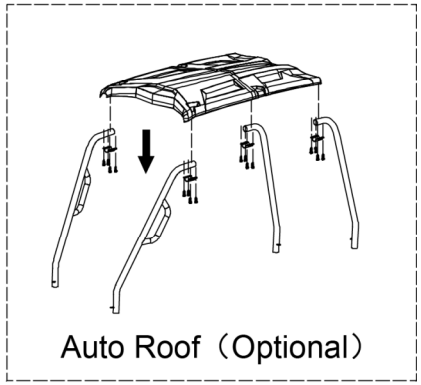

Assembly Steps

1.Install the back wheels .

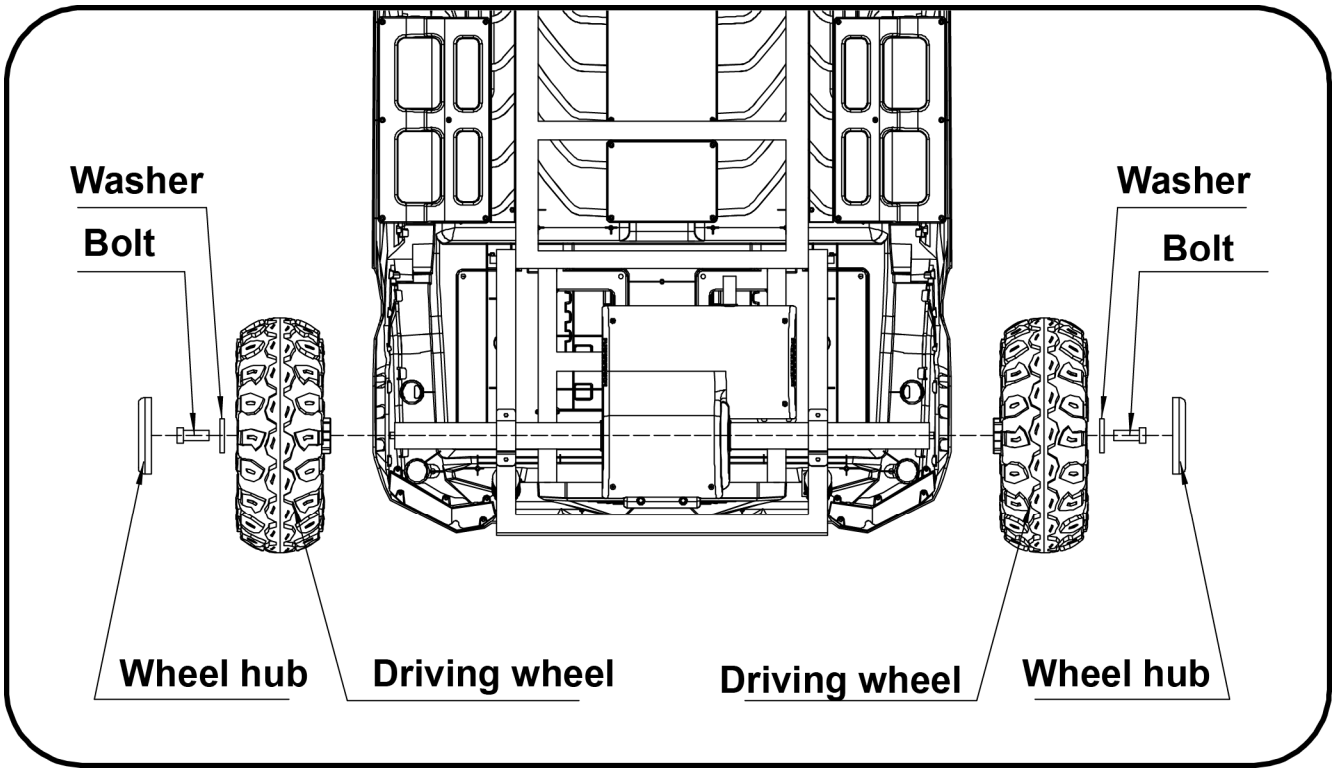

- Put the driving wheel through the rear axle and fix it with Washer, bolt and wheel hub in turn.
- The other side is same as above.

2.Install the front wheel .

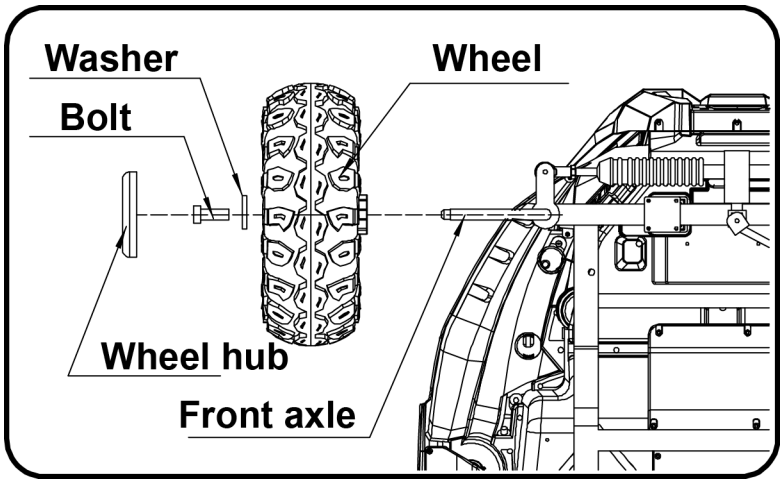

- As showed in the picture,Put the wheel through the rear axle and fix it with Washer, bolt and wheel hub in turn.
- Fix another wheel on the other side.

Assembly Steps

3. Install the guide frame .

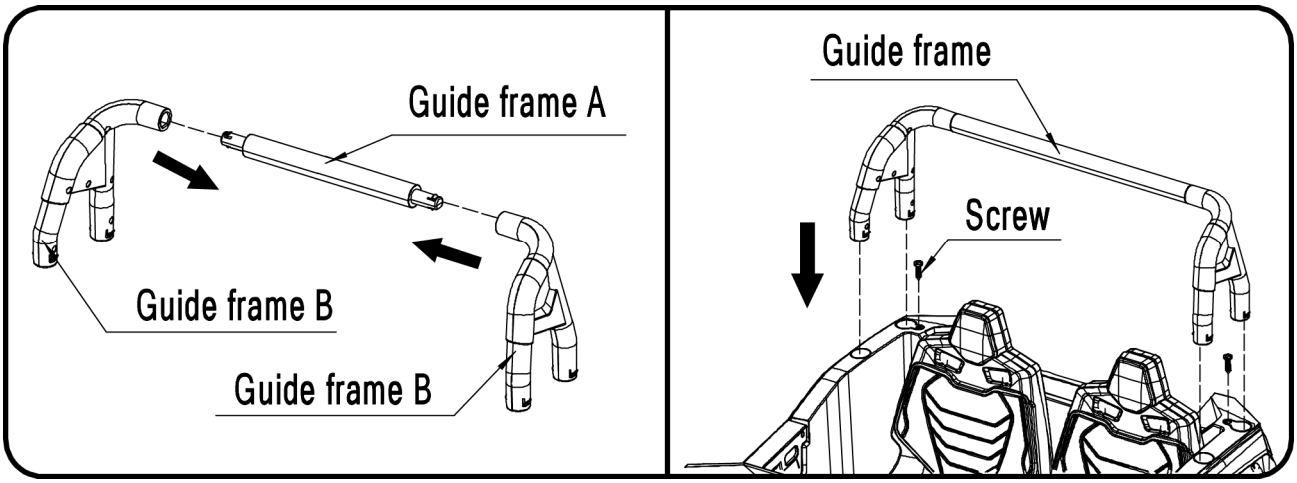

- As showed in the picture, install the guide frame B to the corresponding place.
- As showed in the picture, press the guide frame downward to fix it.

4. Install the steering wheel.

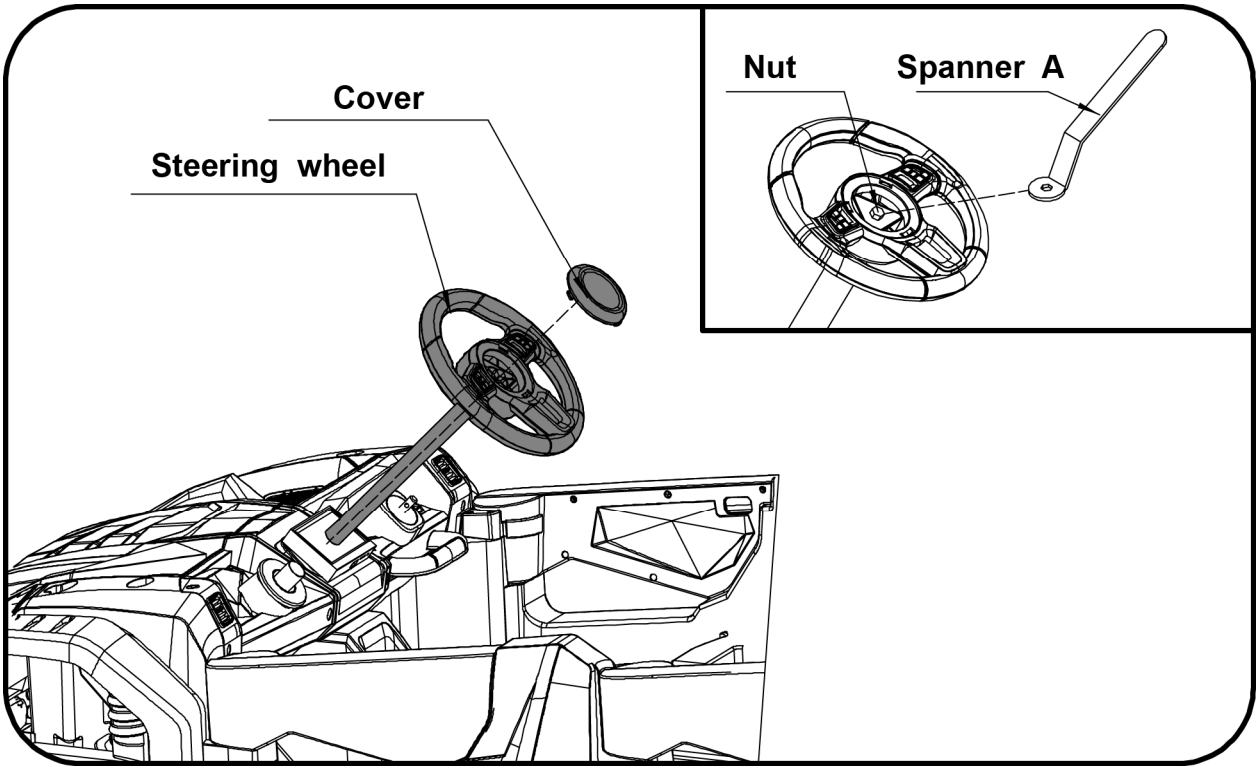

- As showed in the picture, press the steering wheel,Adjust the height well and fasten with the nut.
- Fasten the nut with spanner.The steer wheel height could be adjusted from here.
- As showed in the picture, install the cove.

Assembly Steps

5. Install the seat.

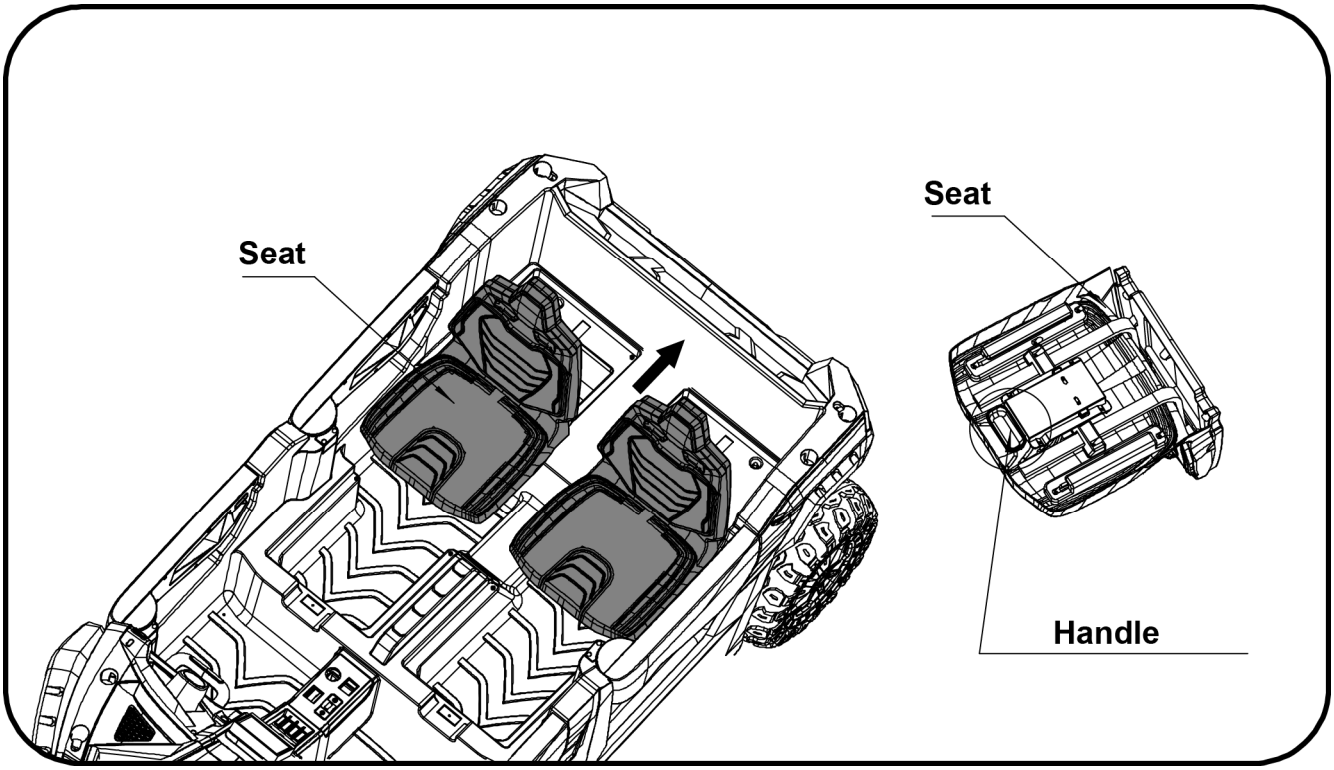

- As shown in the picture, press and hold the handle, then install the seat to the corresponding place .

6. Install the windshield bar.

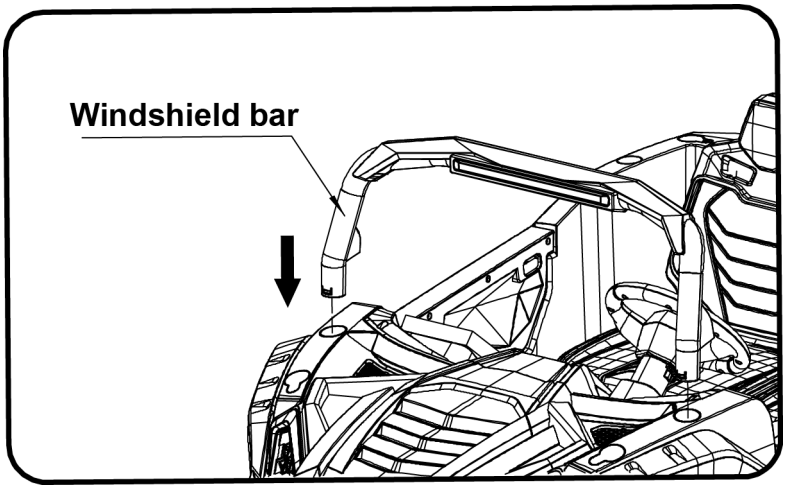

- As showed in the picture, press the windshield bar downward to fix it.

Assembly Steps

7.Connect the power supply.

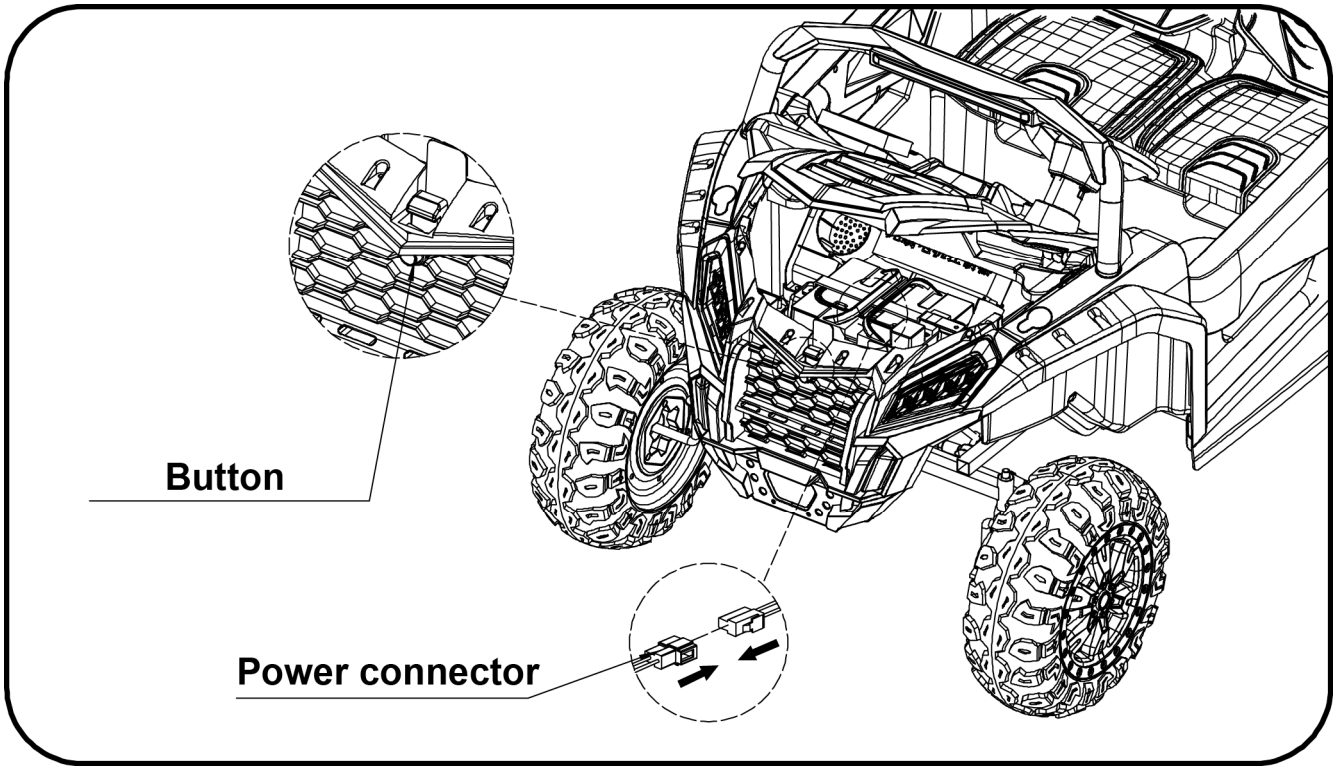

- As shown in the picture, press and hold the button,then open the hood .
- As shown in the picture,the wire connector plug butt.
- Special note:The battery pack could be taken out for easy charging,by the charger and the charging cable in the accessary kit.

8. Install the auto roof (optional) .

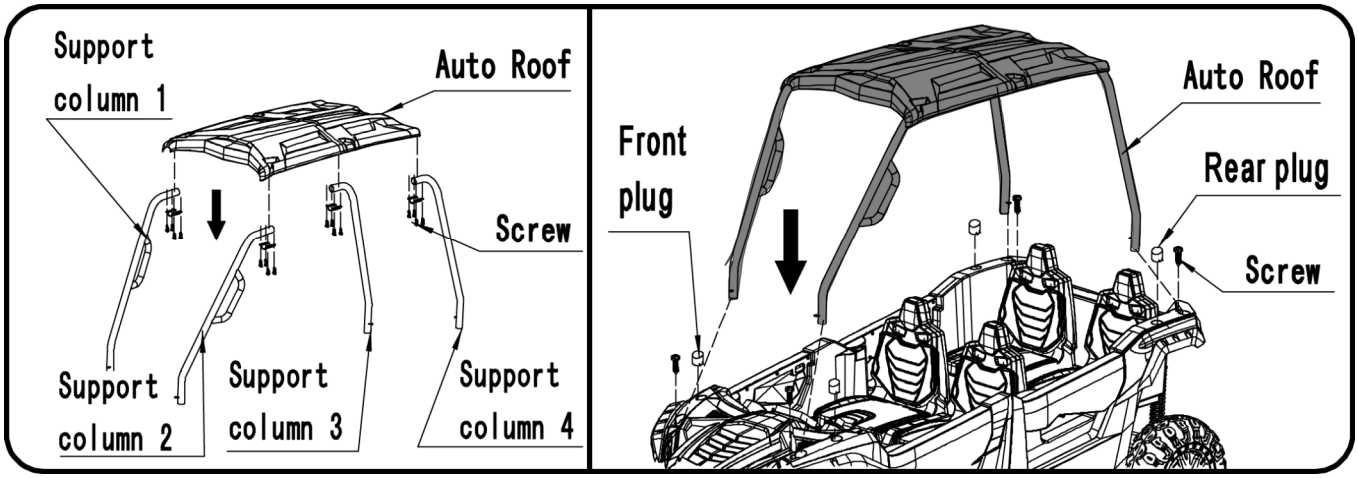

- As showed in the picture, install the support column to the auto roof,and fasten with screws.
- The support column has front and rear, left and right, pay attention to distinguish.
- As showed in the picture, install the auto roof to the vehicle body,and fasten with screws.
- As showed in the picture, install the front plug and rear plug to the vehicle body.

How To Operate Your Vehicle

Use Operation(Ensure the power switch has been turned on)

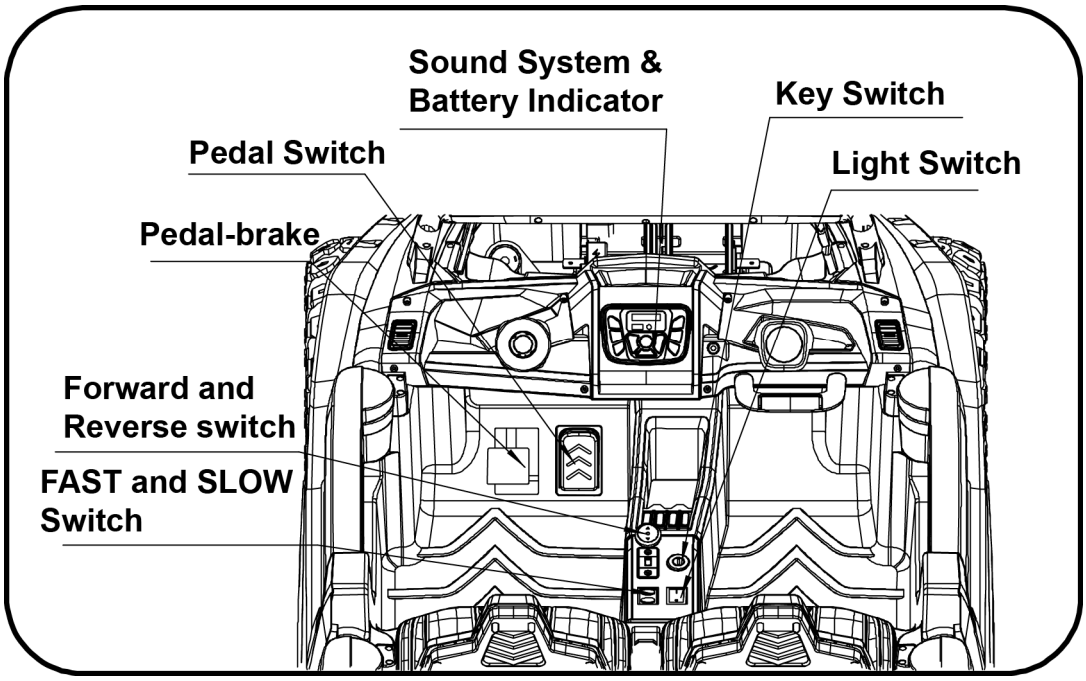

IMPORTANT!

Always stop vehicle when changing the speed or direction to avoid damage the gear box and motor.

(1)Turn on the power switch first, the sound can be played.

(2) Forward

Press the "Forward and Reverse switch" to the " ↑ " position.

Press the pedal.

The vehicle drives forward.

(3) Stop

Press the pedal-brake .

The vehicle stops .

(4) Reverse

Press the "Forward and Reverse switch" to the " ↓ " position.

Press the pedal.

The vehicle drives backward.

(5) Turn on the "FAST and SLOW Switch" , control the speed of the car.

(6) Turn on the "Light Switch" , The car can light.

How To Operate Your Vehicle

(7) How to use the Sound System & Battery Indicator

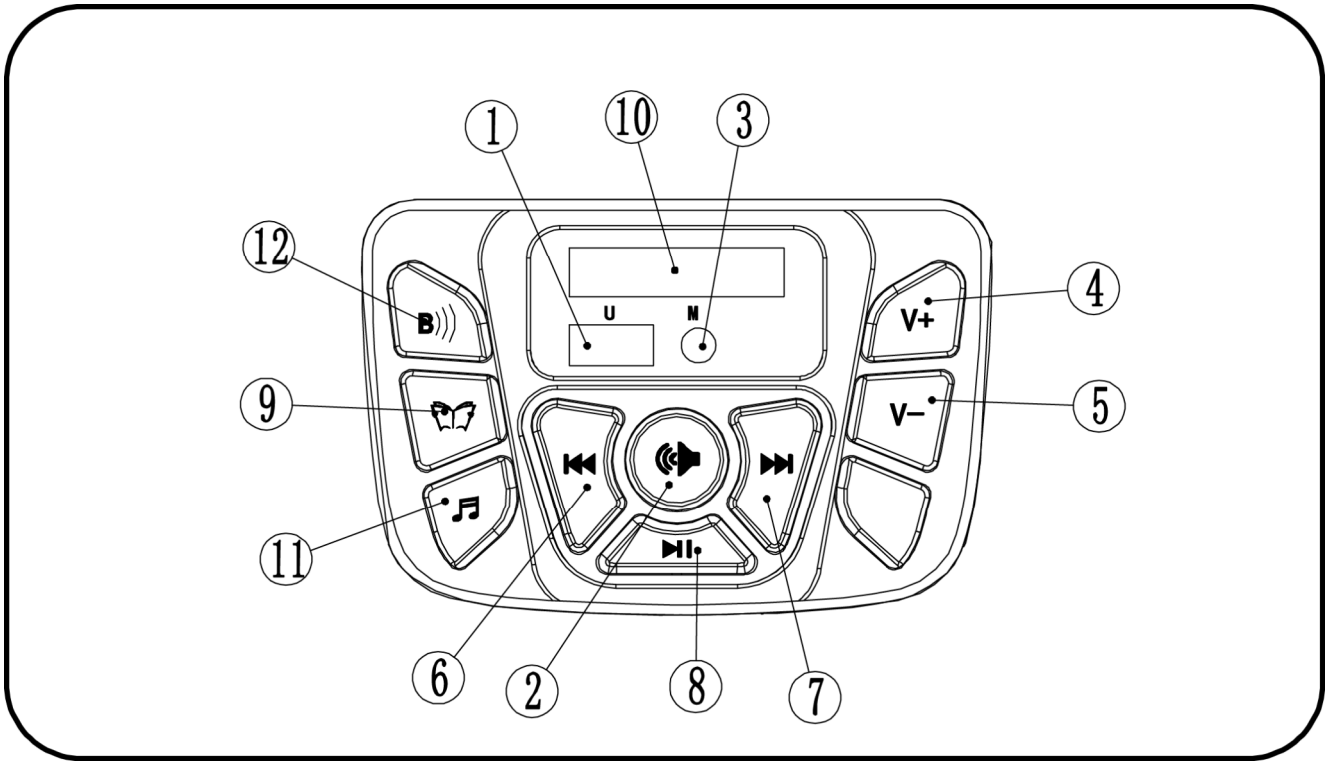

- 1. Storage device slot.
- 2. Horn.
- 3.AUX Port
- 4.Increase volume.
- 5.Decrease volume
- 6. Next Song: Switch songs.
- 7. Last Song: Switch songs.
- 8. SCAN Button: you can control the music play and pause.
- 9.Tell a story
- 10.Power Display: Shows battery power and charge level.
- 11.Music Button: Press to play music.
- 12.Smart connecting the car with your mobile, then you can play mobile files on the car.

Charging Your Vehicle

ONLY AN ADULT CAN CHARGE AND RECHARGE THE BATTERY!

- non-rechargeable batteries are not to be recharged;
- different type of batteries or new and used batteries are not to be mixed;
- batteries are to be inserted with the correct polarity;
- exhausted batteries are to be removed from the toy;
- the supply terminals are not to be short-circuited.
- rechargeable batteries are only to be charged under adult supervision;
- rechargeable batteries are to be removed from the toy before being charged;
- The transformers or battery charger used with the toy are to be regularly examined for damage to the cord, plug, enclosure and other parts, and in the event of such damage, they must not be used until that damage had been repaired.

⚠ WARNING!

- **PREVENT FIRE AND ELECTRIC SHOCK:**
  - Use the only rechargeable battery and charger supplied with your vehicle. NEVER substitute the battery or the charger with another brand. Using another battery or charger may cause a fire or explosion.
  - Do not use the battery or charger for any other product. Overheating, fire or explosion could occur.
  - NEVER modify the electric circuit system. Tampering with the electric system may cause a shock, fire or explosion or my permanently damage the system.
  - Do not allow direct contact between battery terminals. Fire or explosion can occur.
  - Do not allow any type of liquid on the battery or its components.
  - Explosive gasses are created during charging. Do not charge near heat or flammable materials. Charge the battery in a well-ventilated area ONLY.
  - NEVER pick up the battery by the wires or charger. Damage can occur to the battery and may cause a fire. Pick up the battery by the case ONLY.
  - Charge the battery in a dry area ONLY.
- Battery posts, terminals and related accessories contain lead and lead compounds, chemicals known to the State of California to cause cancer and reproductive harm. **Wash hands after handling.**
- Do not open the battery. Battery contains lead acid and other materials that are toxic and corrosive.
- Do not open the charger. Exposed wiring and circuitry inside case may cause electric shock.

  Only adults may handle or charge the battery. NEVER allow child to handle or charge the battery.

  Battery is heavy and contains lead acid (electrolyte).

Charging Your Vehicle

⚠WARNING!

• PREVENT FIRE AND ELECTRIC SHOCK:

• Do not drop the battery. Permanent damage to the battery could occur or cause serious injury.
• Before charging the battery, check for wear or damage to the battery, charger, its supply cord and the connectors. DO NOT charge the battery if any damage to parts has occurred.
• Do not allow the battery to drain completely. Recharge the battery after each use or once a month if not used regularly.
• Do not charge battery upside down.
• Always secure the battery with the bracket.

• The charging input socket is ON THE GAUGE BOARD.
• The POWER SWITCH must be turned in OFF position when charging.
• Before the first use, you should charge the battery for 6-9 hours. Do not recharge the battery for more than 20 hours to avoid overheating the charger.
• When the vehicle begins to run slowly, recharge the battery.
• After each use or once a month minimum recharge time as 6 to 9 hours, no more than 20 hours.
• Battery packed in battery case could be taken out from the car for portable charging.

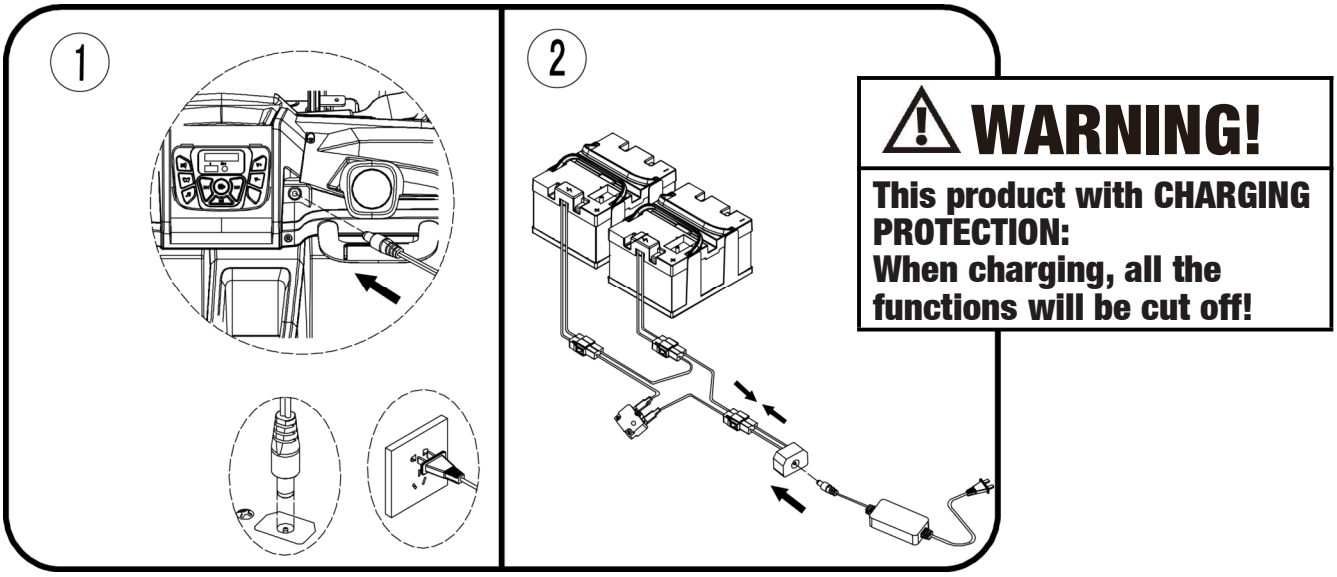

- As shown in picture 1,find the charging input socket on the gauge board ;Plug the charger port into the input socket; Plug the charger port into the input socket; Plug the charger plug into a wall outlet. The battery will begin charging.
- As shown in picture 2,mobile charging. Take out the battery, the wire connector plug butt ; Plug the charger port into the input socket; Plug the charger port into the input socket; Plug the charger plug into a wall outlet. The battery will begin charging.

Troubleshooting Guide

■ PROBLEM: The vehicle does not run

PROBLEM CAUSE: The battery may low on power.

After each use, or once a month minimum, charge the battery for 6-9 hours. Do not leave the battery on the charger for more than 20 hours.

POSSIBLE CAUSE: Thermal fuse has tripped.

The vehicle is equipped with a self-resetting fuse. When the vehicle is overloaded or operated incorrectly; the self-resetting fuse will be cut off for 5-20seconds before becoming operational again. The self-resetting fuse is under the seat (Refer to the picture.)

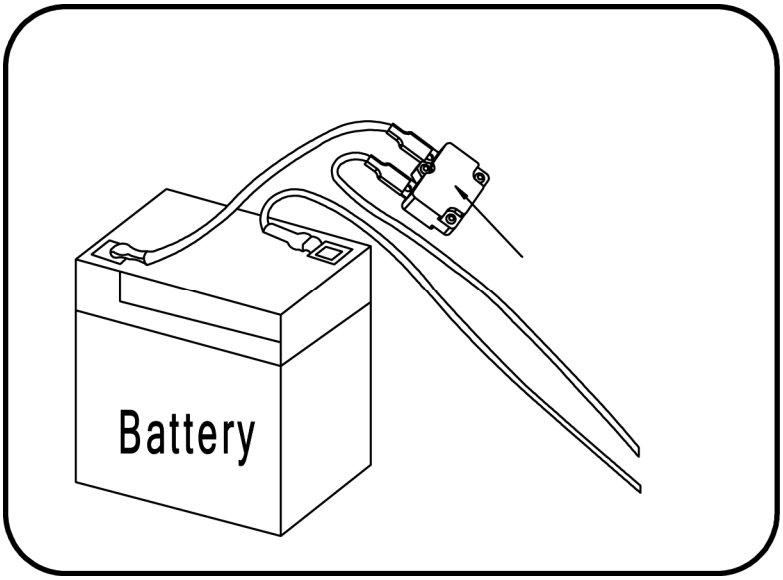

To avoid the fuse cut off the power, follow these guidelines:

DO NOT overload the vehicle, Maximum weight allowed :120kg

DO NOT tow anything behind the vehicle.

DO NOT drive up steep slopes.

DO NOT drive into fixed objects, which may cause the wheels to spin, causing the motor to overheat.

DO NOT drive in very hot weather, components may overheat.

DO NOT tamper with the electric system. Doing so may create a short circuit, causing the fuse to trip.

POSSIBLE CAUSE: Wheel nuts are loose.

If the nuts are not tight, the wheels will not engage the forward gears. Tighten the nut with the nut wrench.

POSSIBLE CAUSE: Battery connector or wires are loose.

Make Sure the battery connectors are firmly plugged into each other.

POSSIBLE CAUSE: Battery is dead.

Have you properly maintained the battery according to the directions? Is the battery old? Your battery may need to be replaced.

POSSIBLE CAUSE: Electric system is damaged.

Water may have corroded the system, or loose dirt, gravel or sand might have jammed the switch.

POSSIBLE CAUSE: Motor is damaged.

The motor needs professional repair.

■ PROBLEM: The battery will not recharge.

POSSIBLE CAUSE: Battery connector or adapter connector is loose.

Make sure the battery connector and adapter connector are firmly plugged together.

POSSIBLE CAUSE: Charger is not plugged in.

Make sure the charger is plugged into the wall outlet and the power flow to the outlet is on.

POSSIBLE CAUSE: Charger is not working.

Is the charger warm while charging? If not, the charger may be broken and may need to be replaced.

Troubleshooting Guide

■ PROBLEM: The vehicle does not run very long.

POSSIBLE CAUSE: Battery may be undercharged.
You may not be charging the battery long enough. After each use, or once a month minimum, charge the battery for 8 to 12 hours. Do not leave the battery on the charger for more than 20 hours.

POSSIBLE CAUSE: Battery is old.
The battery will eventually lose the ability to hold a charge. Depending on the amount of use, and varying conditions, the battery should operate for one to three years. Replace the battery with a new one.

■ PROBLEM: Battery buzzes or gurgles when charging.

This is normal and not a cause for concern. It may also be silent when charging, which is also normal.

■ PROBLEM: Charger feels warm when recharging battery.

This is normal and not a cause for concern.

Maintaining Your Vehicle

- Make sure the plastic parts of the vehicle are not cracked or broken.
- Occasionally use a lightweight oil to lubricate moving parts such as wheels.
- Park the vehicle indoors or cover it with a tarp to protect it from wet weather.
- Keep the vehicle away from sources of heat, such as stoves and heaters. Plastic parts may melt.
- Recharge the battery after each use. Only an adult can handle the battery. Recharge the battery at least once a month when the vehicle Raider is not being used.
- Do not wash the vehicle with a hose. Do not wash the vehicle with soap and water. Do not drive the vehicle in rainy or snowy weather. Water will damage the motor, electric system and battery.
- Clean the vehicle with a soft, dry cloth. To restore shine to plastic parts, use a non-wax furniture polish. Do not use car wax. Do not use abrasive cleaners.
- Do not drive the vehicle in loose dirt, sand or fine gravel which could damage moving parts, motors or the electric system.
- When not using, all the electrical source should be turned off. Turn off the power switch and disconnect the battery connection.

Disposal Of Battery

Disposal Of Battery

- Your sealed lead-acid battery must be recycled or disposed of in an environmentally sound manner.
- Do not dispose of your lead-acid battery in a fire. The battery may explode or leak.
- Do not dispose of a lead-acid battery in your regular, household trash. The incineration, land filling or mixing of sealed lead-acid batteries with household trash is prohibited by law.
- Return an exhausted battery to your local approved lead-acid battery recycle, such as a local seller of automotive batteries.
- Contact your local waste management officials for other information regarding the environmentally sound recycling and disposal of lead-acid batteries.
- The battery must be charged only by adult .Please charge the product before using!
- The toy should not be connected to excessive powers (more than the quantity specified herein), and it should not be operated during charging process.
- Any rechargeable battery must only be charged under adult's supervision.
- Battery & charger should be regularly checked, including wires, plugs, casing, and other parts. Stop using and restored them if finding any damage.
- Open the battery cover on the remote control, and put two pieces of batteries,paying attention to batteries polarity. Replace the battery cover and lock with screws (please replace the battery according to the above steps and should be done by adult) .
- All batteries should be inserted with the correct polarity.
- Non-rechargeable battery should not be charged, please remove any running-off battery from the toy.
- Do not use old and new batteries together, or mix different types of batteries.
- The battery charger used with the toy are to be regularly examined for damage to the cord, plug, enclosure and other parts, and in the event of such damage, they must not be used until that damage had been repaired.

MADE IN CHINA

FCC Warnings

This device complies with part 15 of the FCC Rules. Operation is subject to the following two conditions:
(1) this device may not cause harmful interference, and
(2) this device must accept any interference received, including interference that may cause undesired operation.
Any changes or modifications not expressly approved by the party responsible for compliance could void the user's authority to operate the equipment.
NOTE: This equipment has been tested and found to comply with the limits for a Class B digital device, pursuant to Part 15 of the FCC Rules. These limits are designed to provide reasonable protection against harmful interference in a residential installation. This equipment generates, uses and can radiate radio frequency energy and, if not installed and used in accordance with the instructions, may cause harmful interference to radio communications. However, there is no guarantee that interference will not occur in a particular installation.
If this equipment does cause harmful interference to radio or television reception,
which can be determined by turning the equipment off and on, the user is encouraged to try to correct the interference by one or more of the following measures:
-- Reorient or relocate the receiving antenna.
-- Increase the separation between the equipment and receiver.
-- Connect the equipment into an outlet on a circuit different
from that to which the receiver is connected.
-- Consult the dealer or an experienced radio/TV technician for help.
The device has been evaluated to meet general RF exposure requirement. The device can be u sed in portable exposure condition without restriction