N1-WIFI Test Report

2022.10.09

NOVOCOMMS

Confidential

DIRECTORY

1. Equipment Under Test (EUT) Description
2. Test Results
   2.1. Test Conditions
   2.2. Measurement Uncertainty
   2.3. Gain
   2.4. 2D Radiation Pattern
   2.5. 3D Radiation Pattern
3. Test Setup
4. Test environment

NVC Confidential

©Novocomms Limited

1.Equipment Under Test (EUT) Description

Wireless Type	WIFI
Test Frequency Band	2400MHz-2500MHz/5150MHz-5850MHz
Brand name	NA
Antenna model	NVC-N1-299-V4
Hardware Version	N/A
Software Version	N/A
IMEI	N/A
Sample number	1#

NVC Confidential

©Novocomms Limited

2.Test Results

2.1.Test Conditions

Relative Humidity:	25 ... 75 %
Temperature:	+10 °C to +30 °C

2.2.Measurement Uncertainty

The uncertainty is calculated using the methods suggested in the "Guide to the Expression of Uncertainty in Measurement" (GUM) published by ISO

Item	Measurement Uncertainty(dB)
Gain	±0.5
VSWR	±0.2
Measurement Uncertainty(95% Confidence Interval) K=2	

NVC Confidential

©Novocomms Limited

NOVOCOMMS

2.3.Gain

Main	
Freq. (MHz)	Gain(dBi)
2400	-1.14
2450	-1.53
2500	-2.06
5150	-1.05
5250	-0.25
5350	-0.43
5470	-2.2
5600	-2.82
5725	-3.99
5785	-3.45
5850	-3.28

AUX	
Freq. (MHz)	Gain(dBi)
2400	-0.75
2450	-1.01
2500	-1.52
5150	-2.99
5250	-3.15
5350	-2.36
5470	-3.02
5600	-2.82
5725	-2.95
5785	-2.49
5850	-2.74

NVC Confidential

©Novocomms Limited

NOVOCOMMS

2.4.2D Radiation Pattern（Main ANT）

Phi=0°

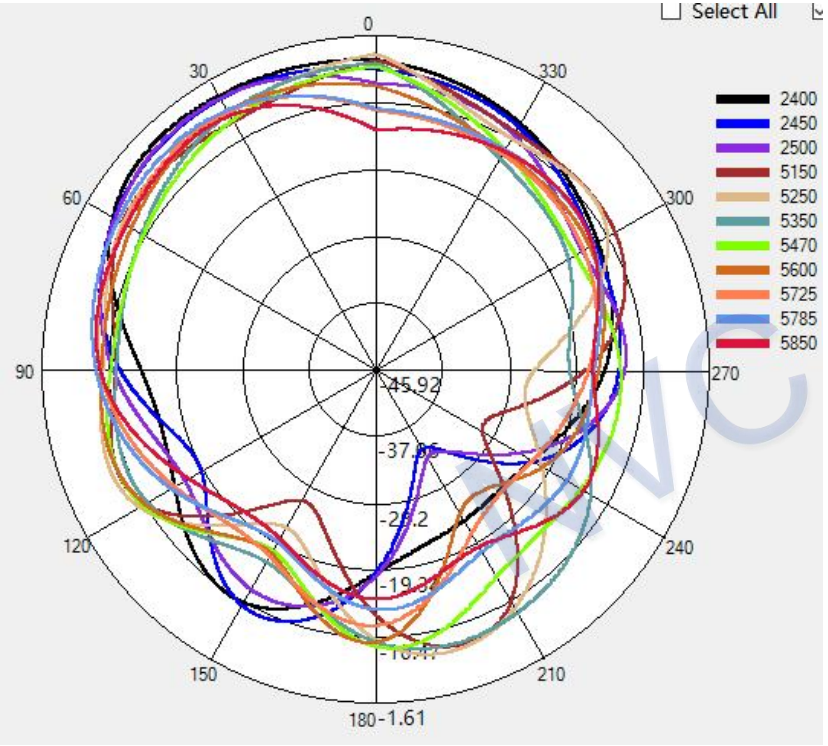

Phi=90°

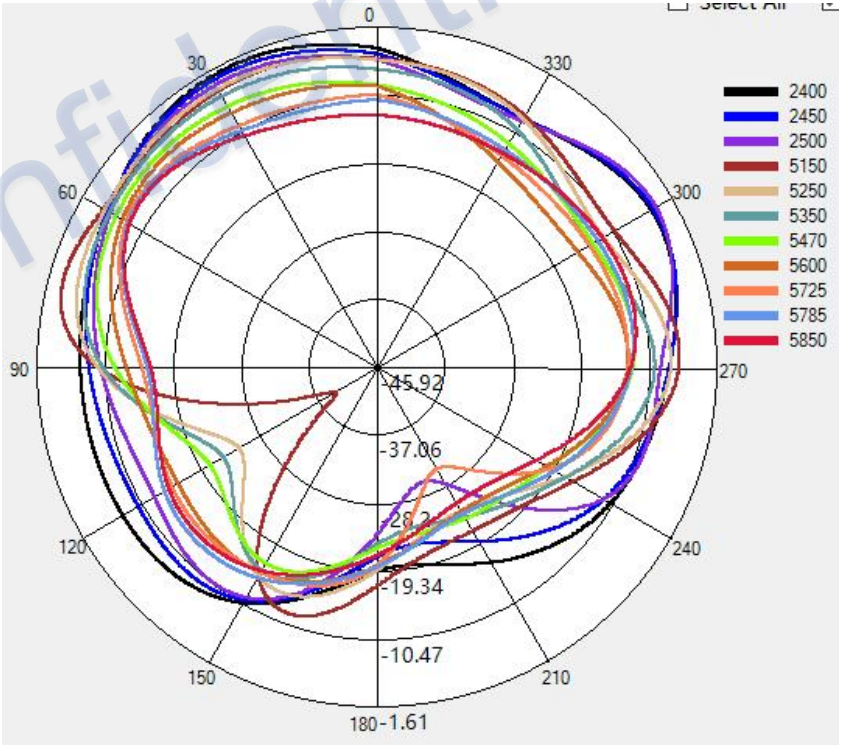

Novo Confidential

©Novocomms Limited

NOVOCOMMS

2.4.2D Radiation Pattern（Main ANT）

Theta=90°

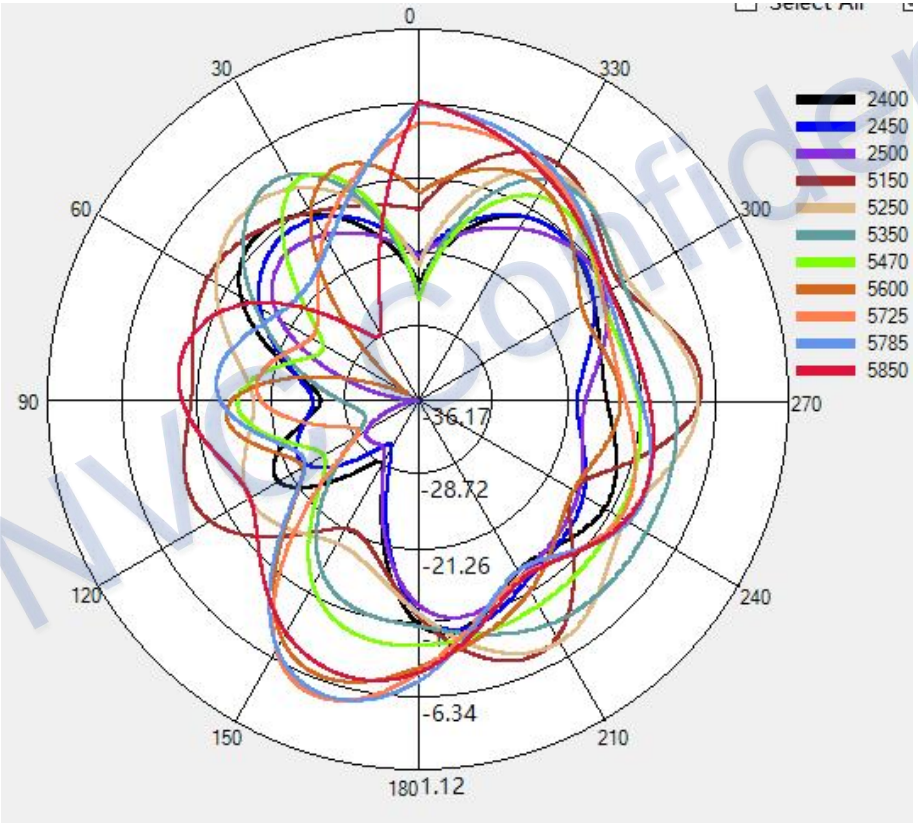

NVC Confidential

©Novocomms Limited

NOVOCOMMS

2.4.2D Radiation Pattern（AUX ANT）

Phi=0°

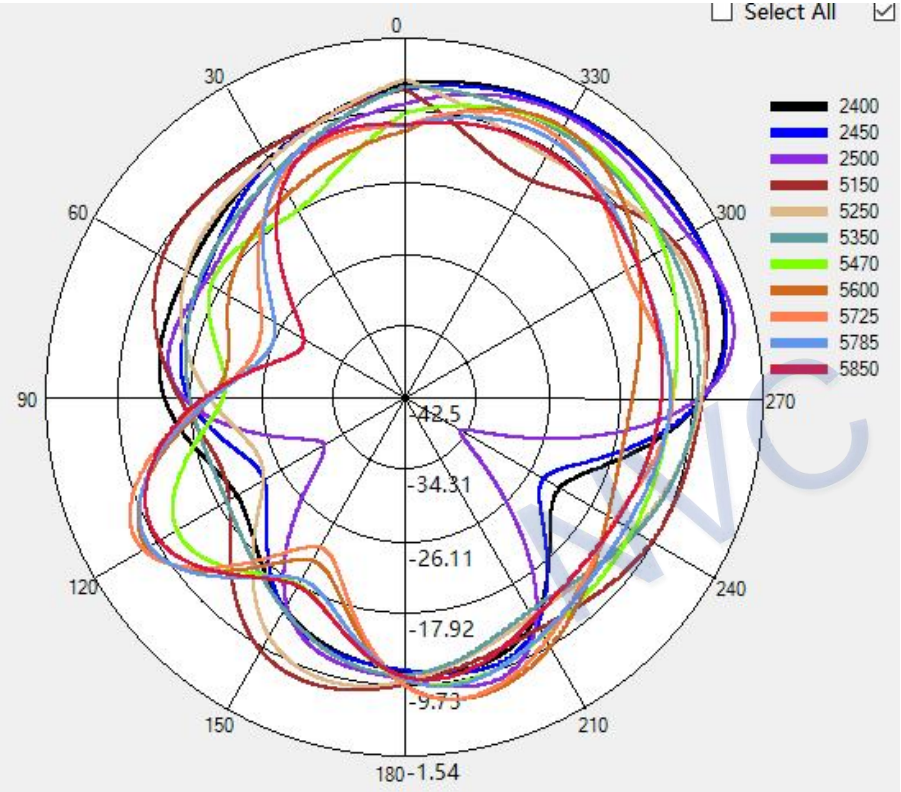

Phi=90°

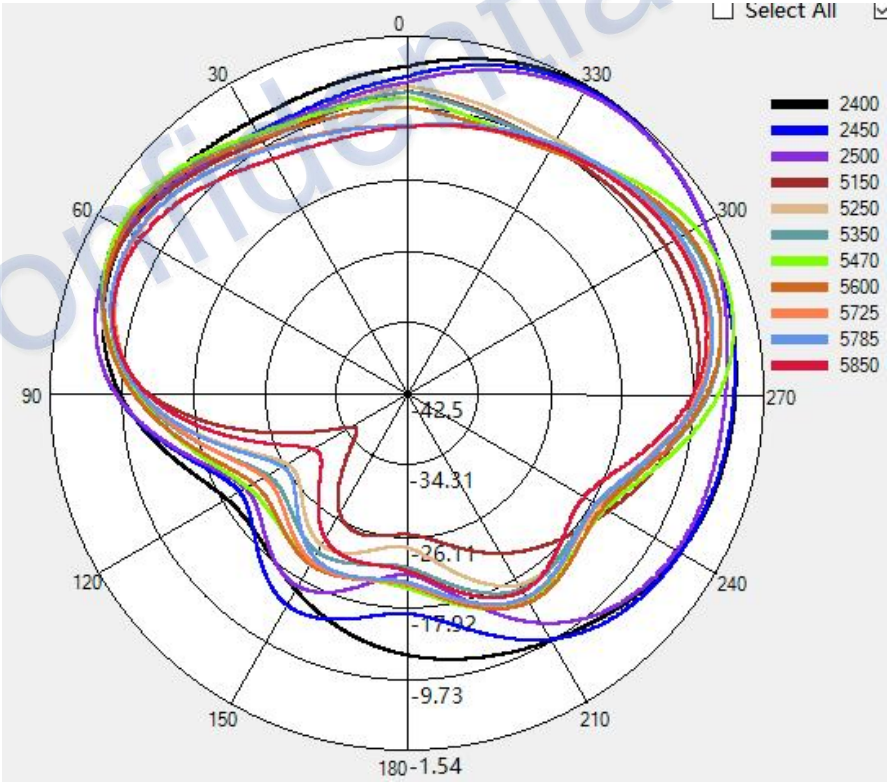

NVC Confidential

©Novocomms Limited

NOVOCOMMS

2.4.2D Radiation Pattern（AUX ANT）

Theta=90°

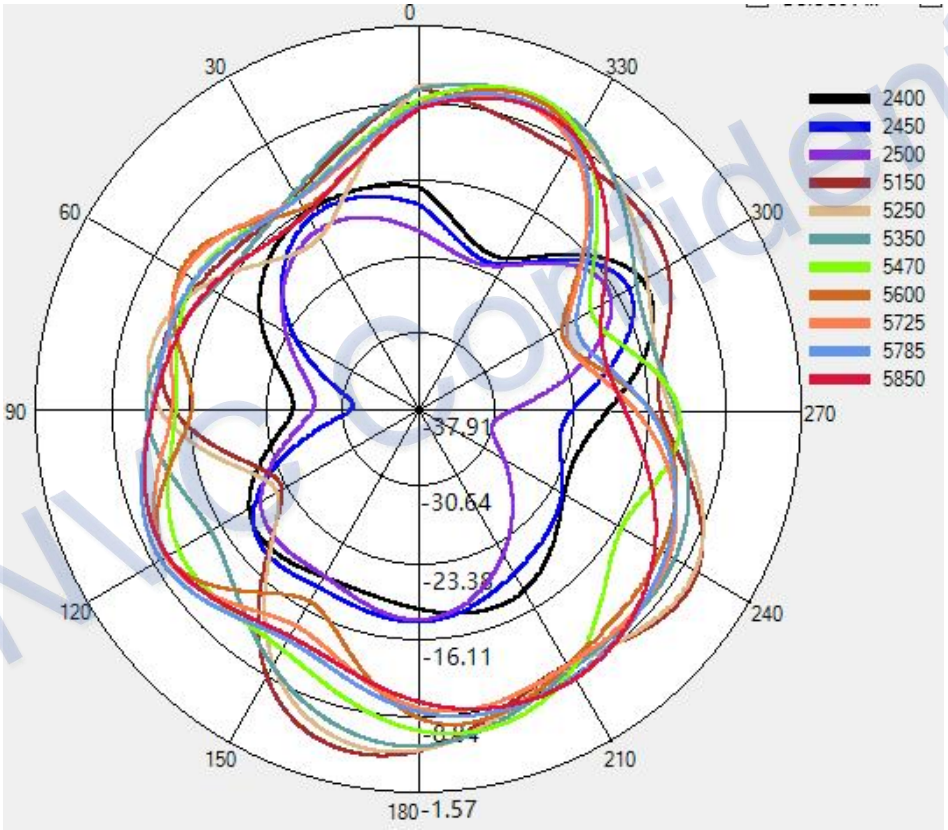

NVC Confidential

©Novocomms Limited

2.5.3D Radiation Pattern（Main ANT）

2400MHz

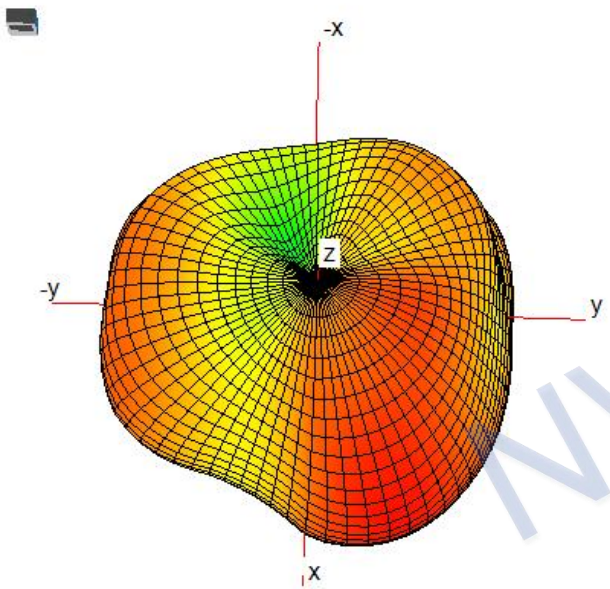

2450MHz

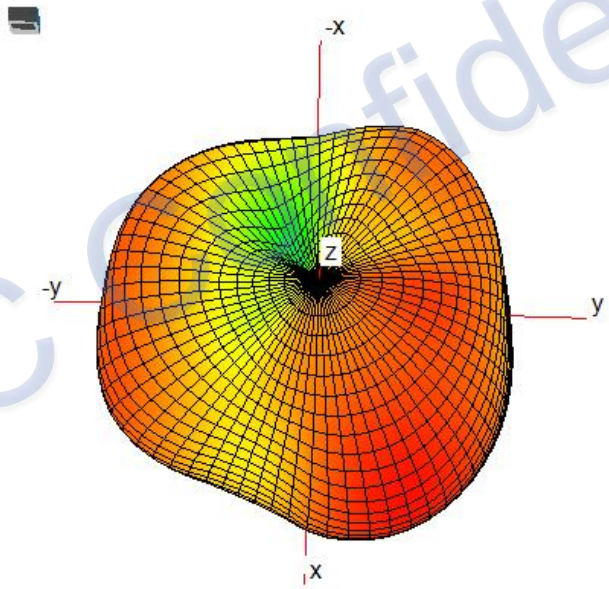

2500MHz

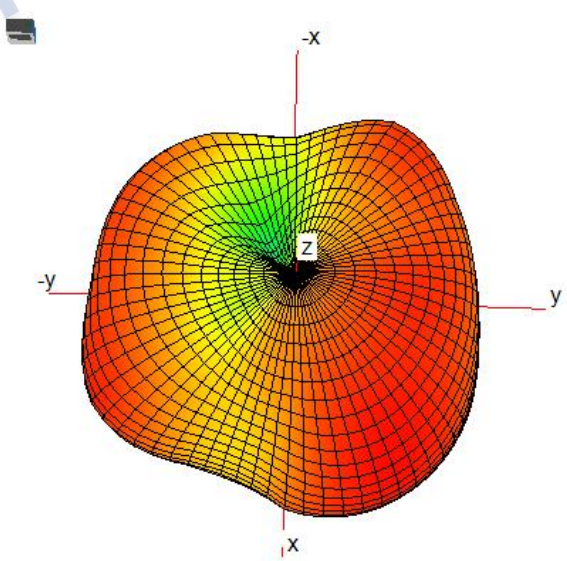

NVC Confidential

©Novocomms Limited

2.5.3D Radiation Pattern（Main ANT）

5150MHz

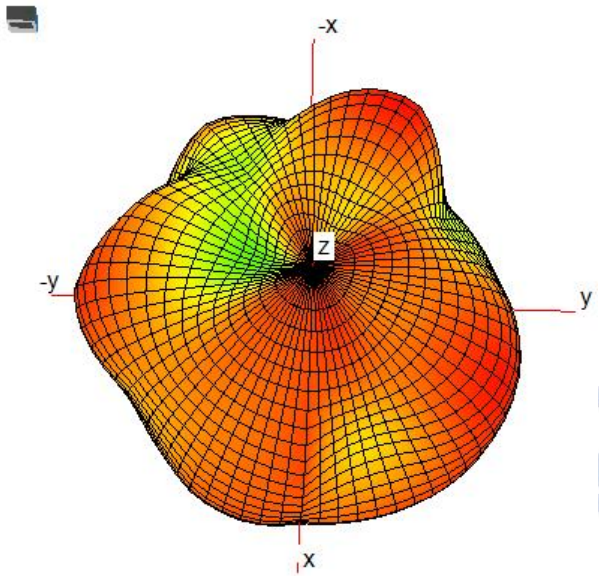

5250MHz

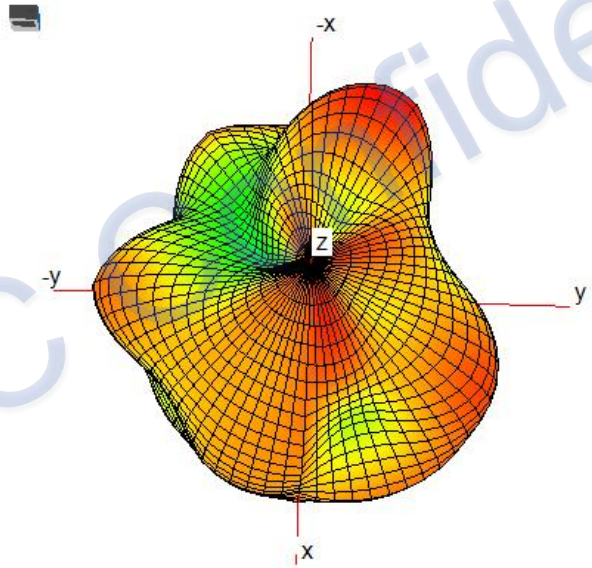

5350MHz

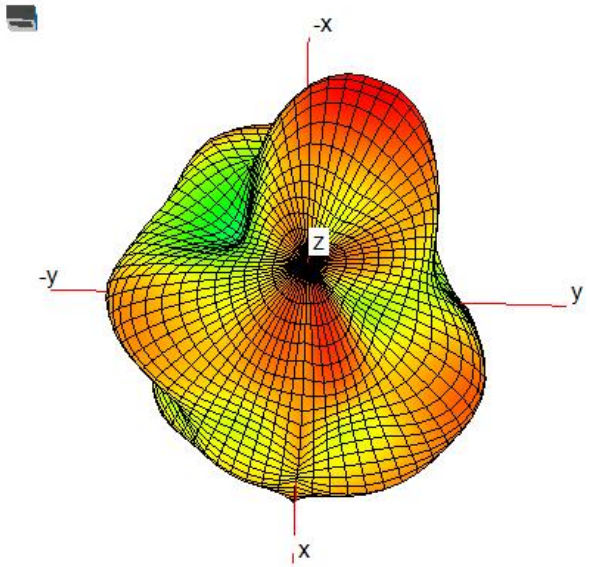

NVC Confidential

©Novocomms Limited

2.5.3D Radiation Pattern（Main ANT）

5470MHz

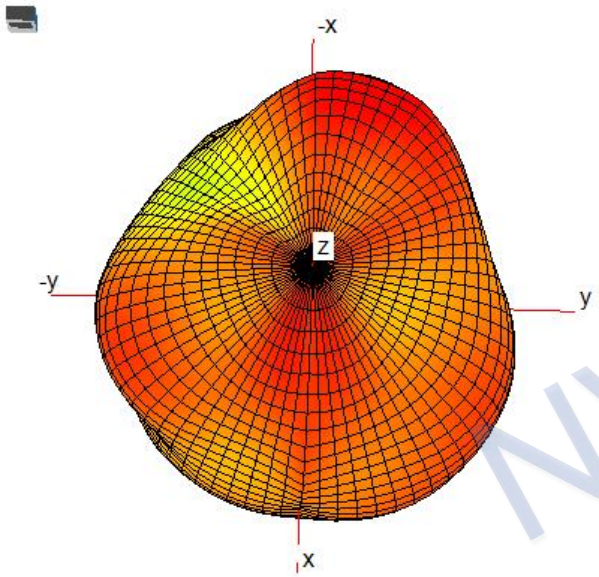

5600MHz

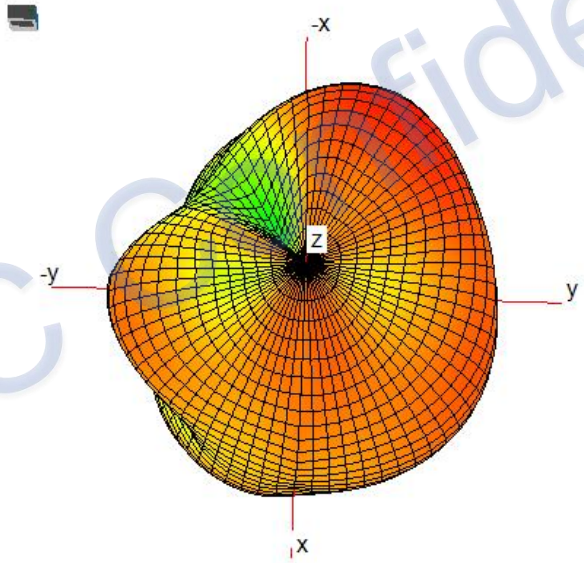

5725MHz

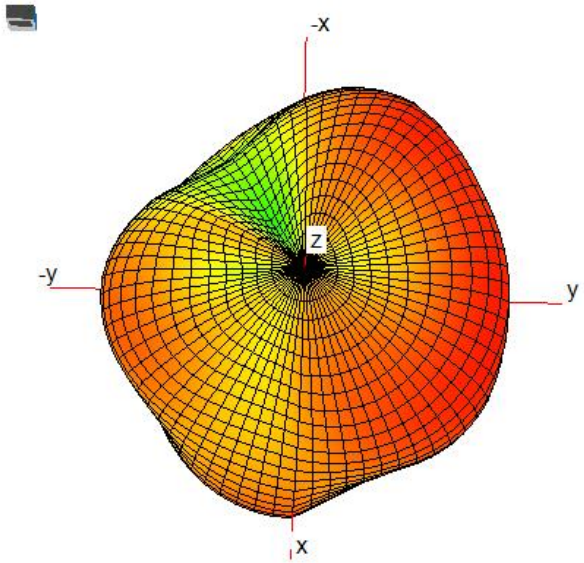

NVC Confidential

©Novocomms Limited

2.5.3D Radiation Pattern（Main ANT）

5785MHz

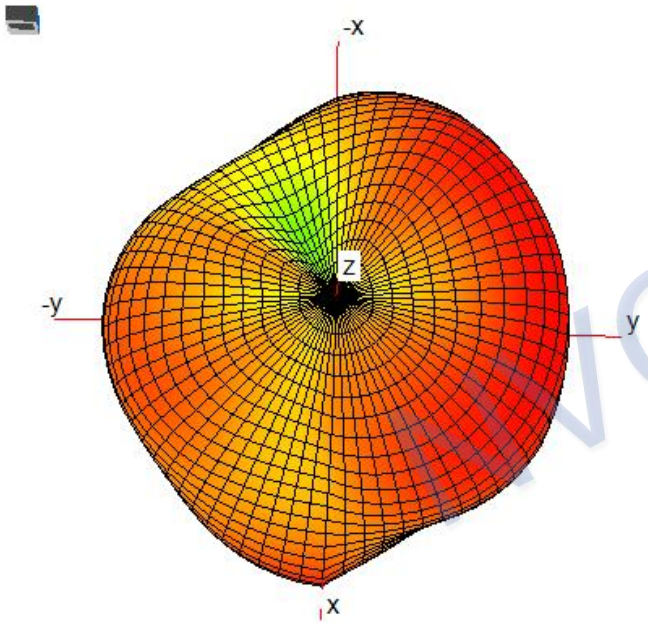

5850MHz

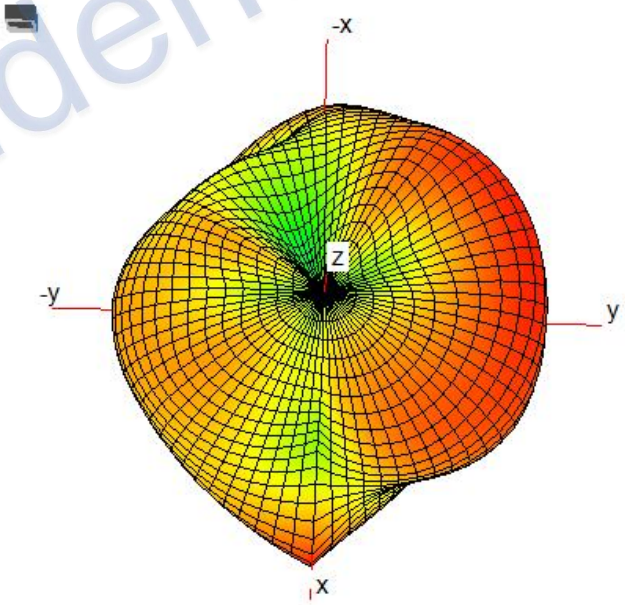

NVC Confidential

©Novocomms Limited

NOVOCOMMS

2.5.3D Radiation Pattern（AUX ANT）

2400MHz

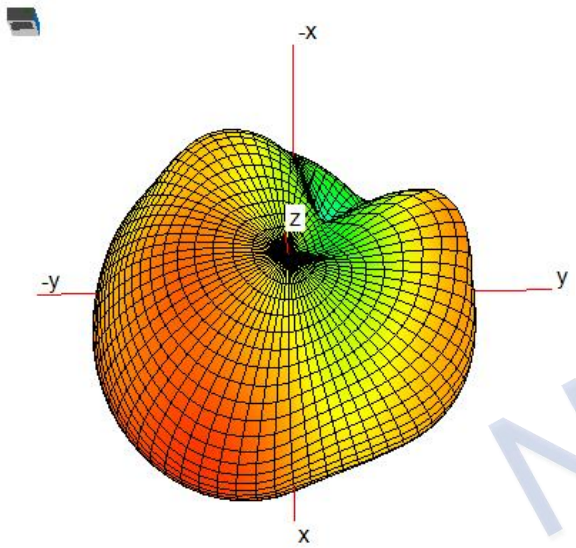

2450MHz

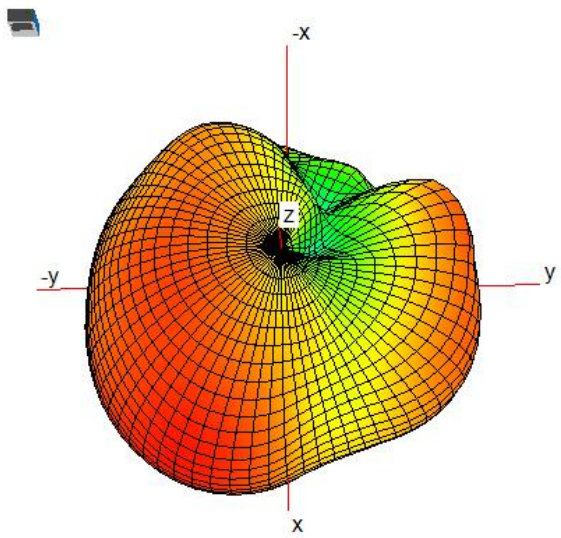

2500MHz

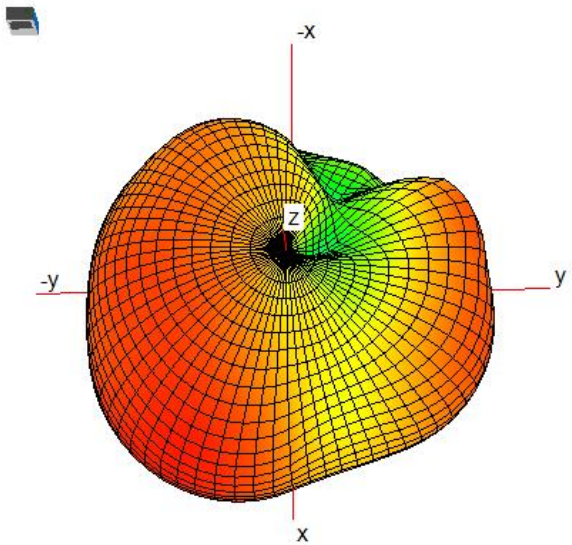

NV jential

©Novocomms Limited

2.5.3D Radiation Pattern（AUX ANT）

5150MHz

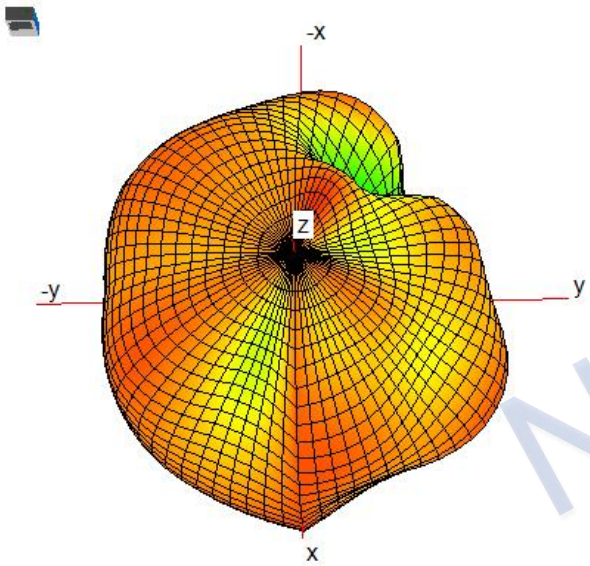

5250MHz

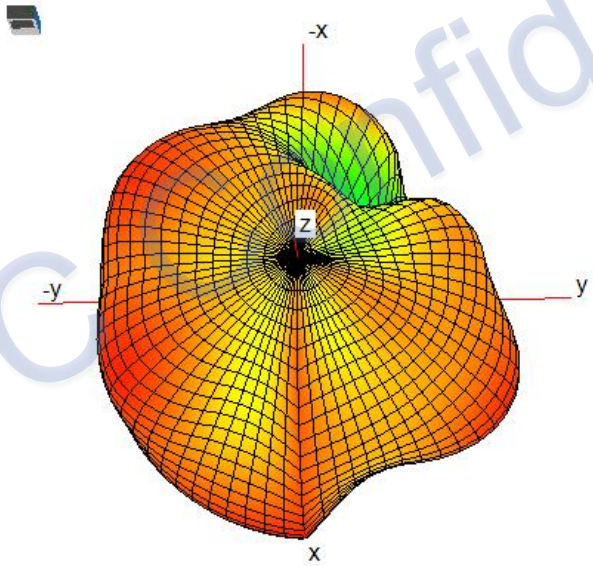

5350MHz

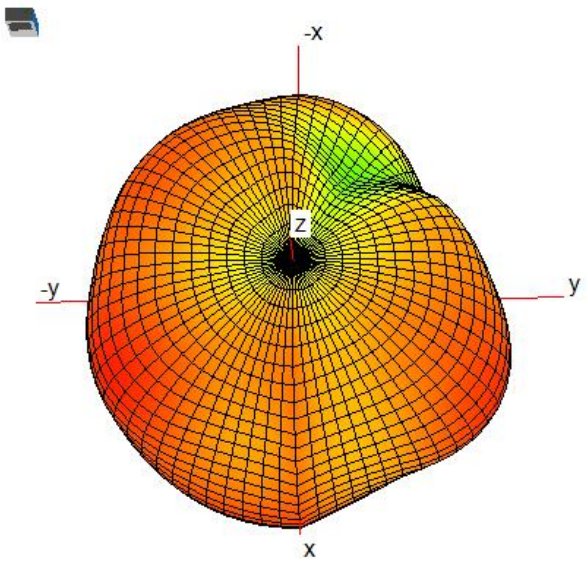

NVC Confidential

©Novocomms Limited

NOVOCOMMS

2.5.3D Radiation Pattern（AUX ANT）

5470MHz

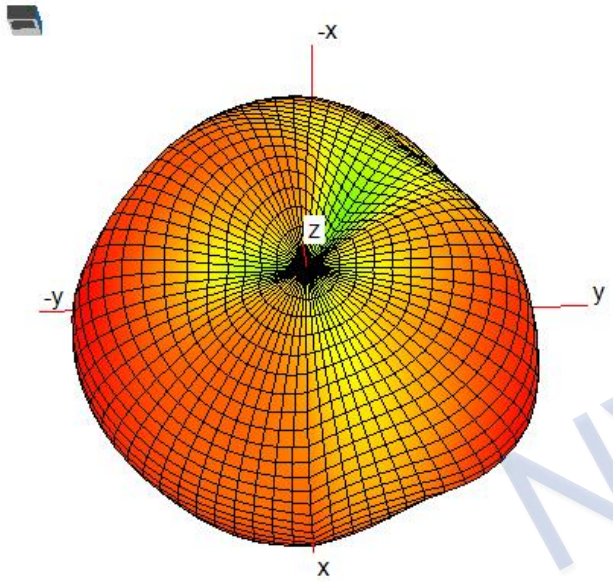

5600MHz

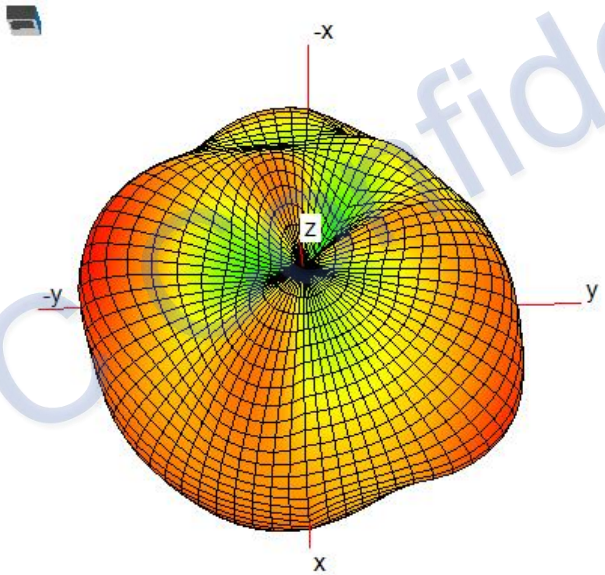

5725MHz

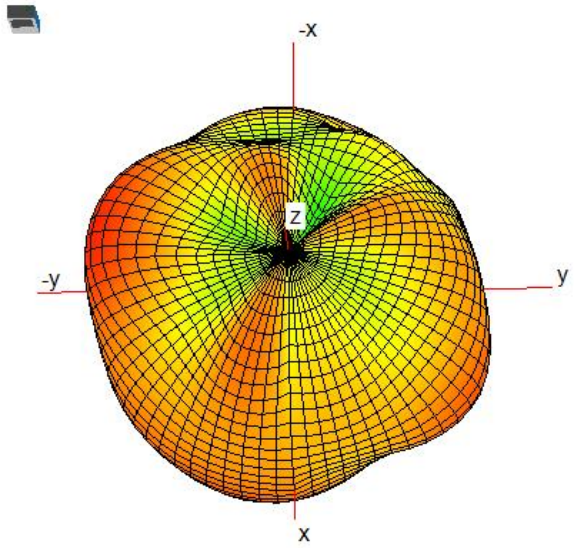

NVC Confidential

©Novocomms Limited

2.5.3D Radiation Pattern（AUX ANT）

5785MHz

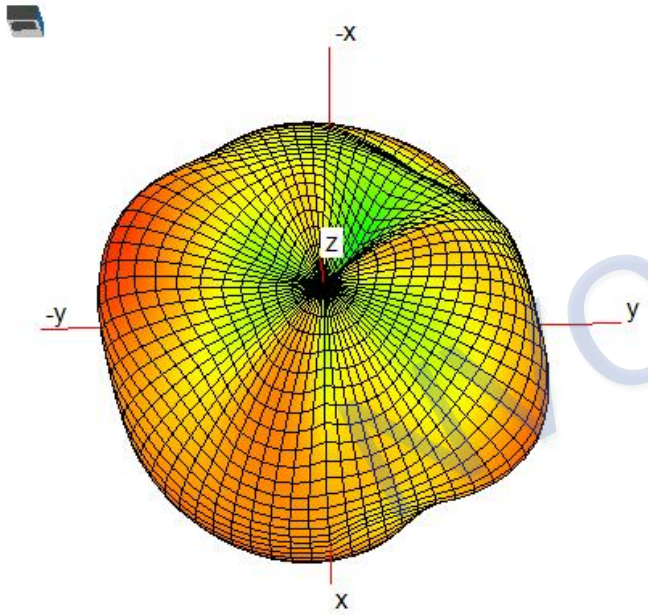

5850MHz

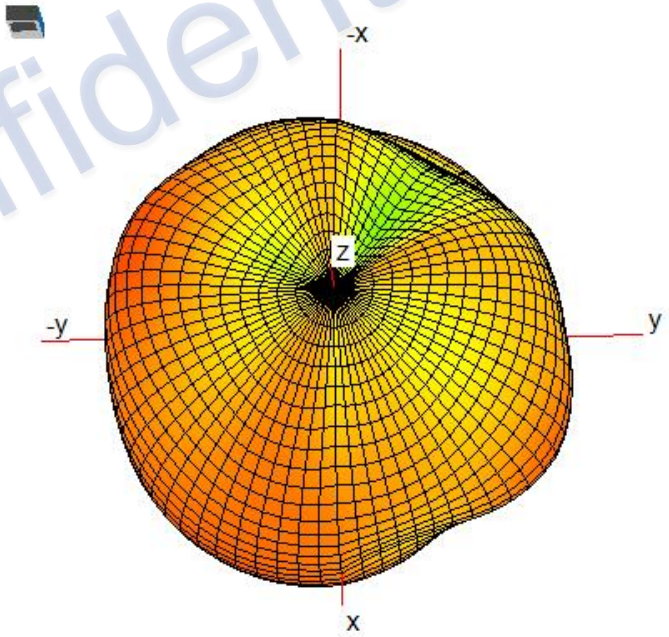

NVC Confidential

©Novocomms Limited

3.Test Setup

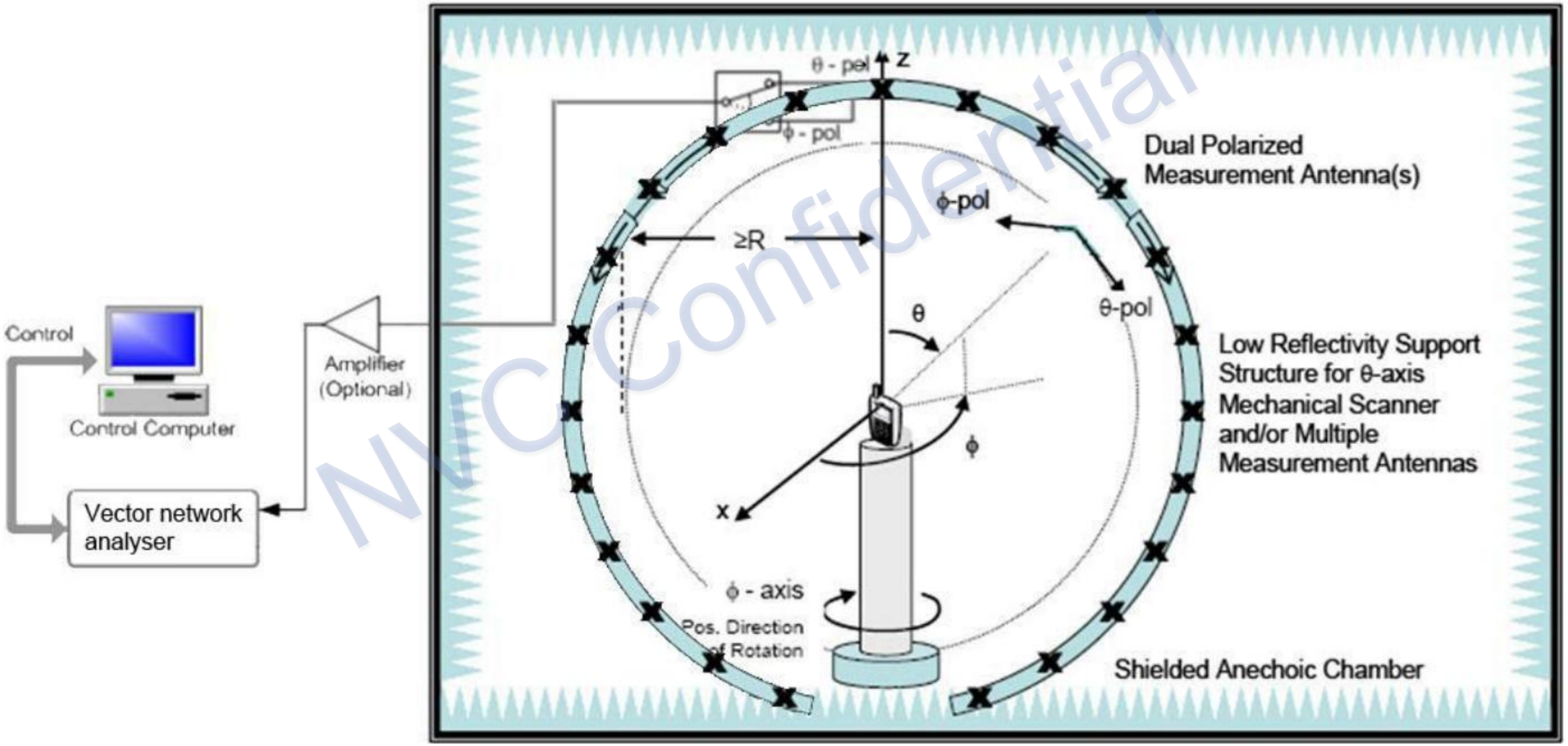

NVC Confidential

©Novocomms Limited

4.Test environment

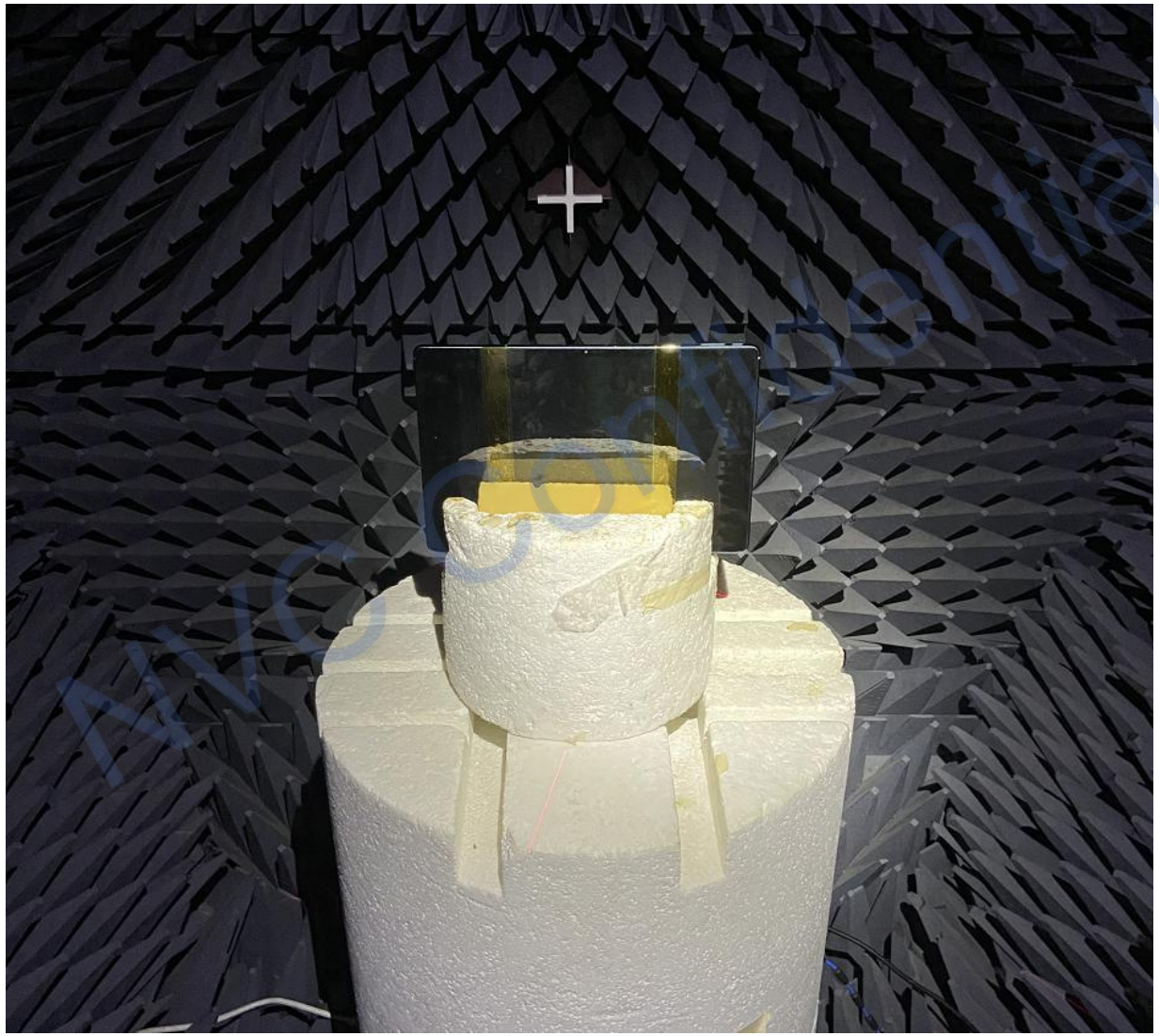

NVC Confidential

©Novocomms Limited

4.Test environment

5071C Network Analyzer

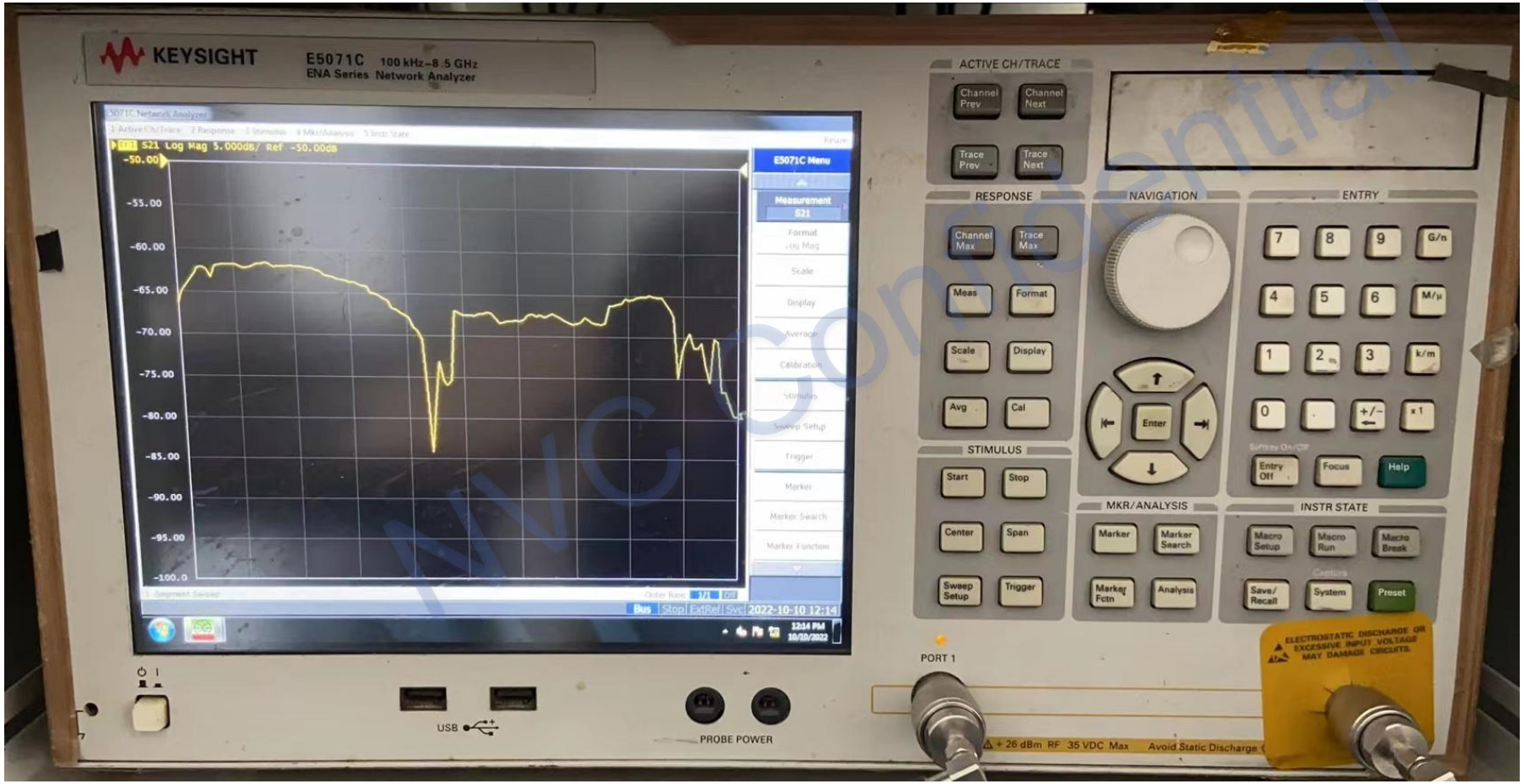

NVC Confidential

©Novocomms Limited

4.Test environment

NOVOCOMMS

CMW500

NVC Confidential

©Novocomms Limited

4.Test environment

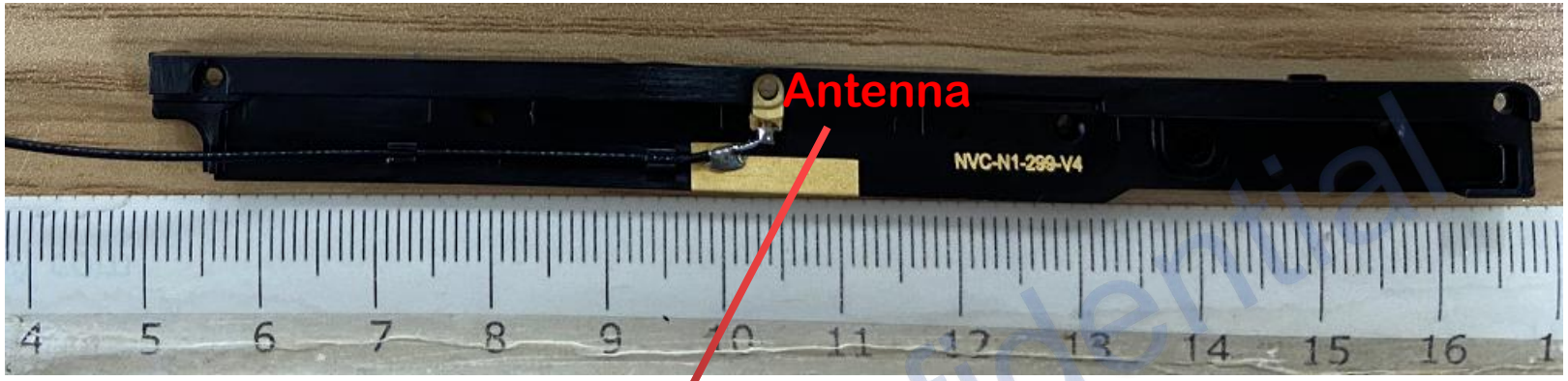

Novo Confidential

©Novocomms Limited

NOVOCOMMS

Thank You

Confidential