FG01 Smart Lock

What's in the box?

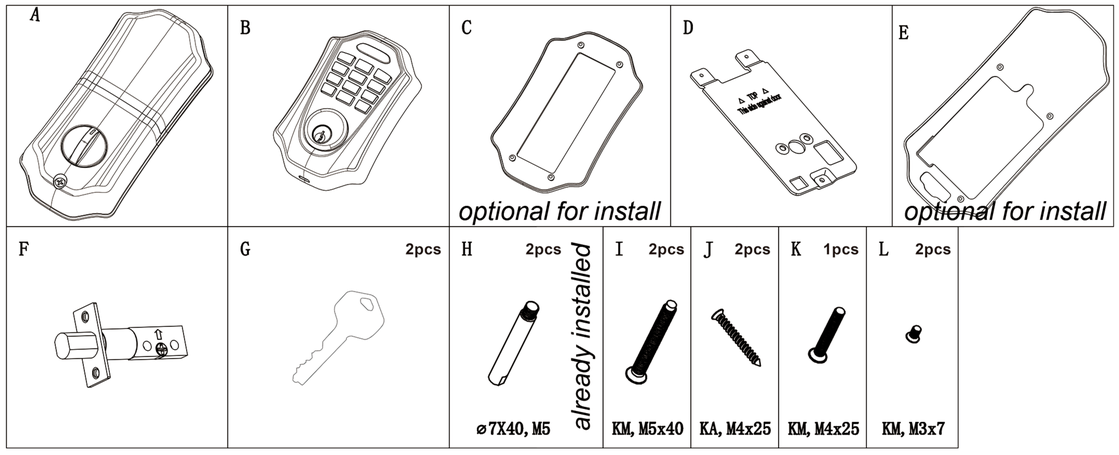

Left Open Door

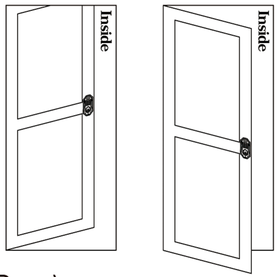

Right Open Door

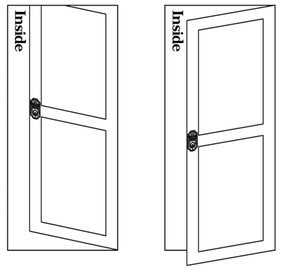

Install(Left Open Door)

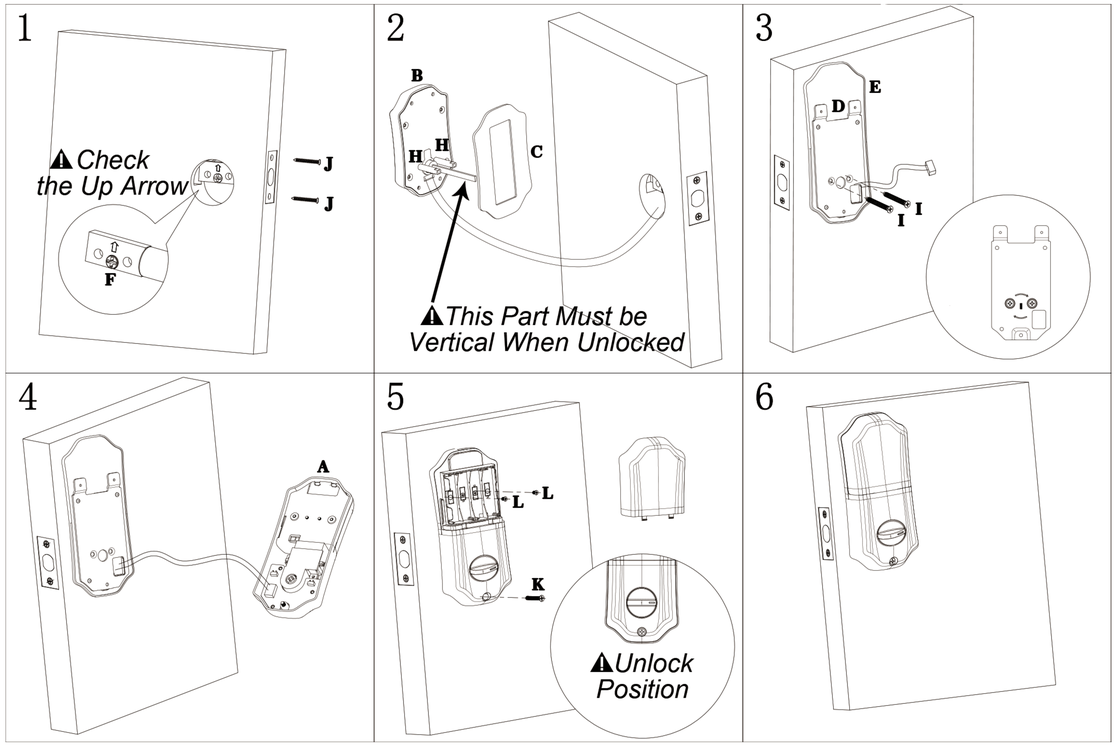

After you installed the lock correctly, please turn to the back to see the App Manual, thank you.

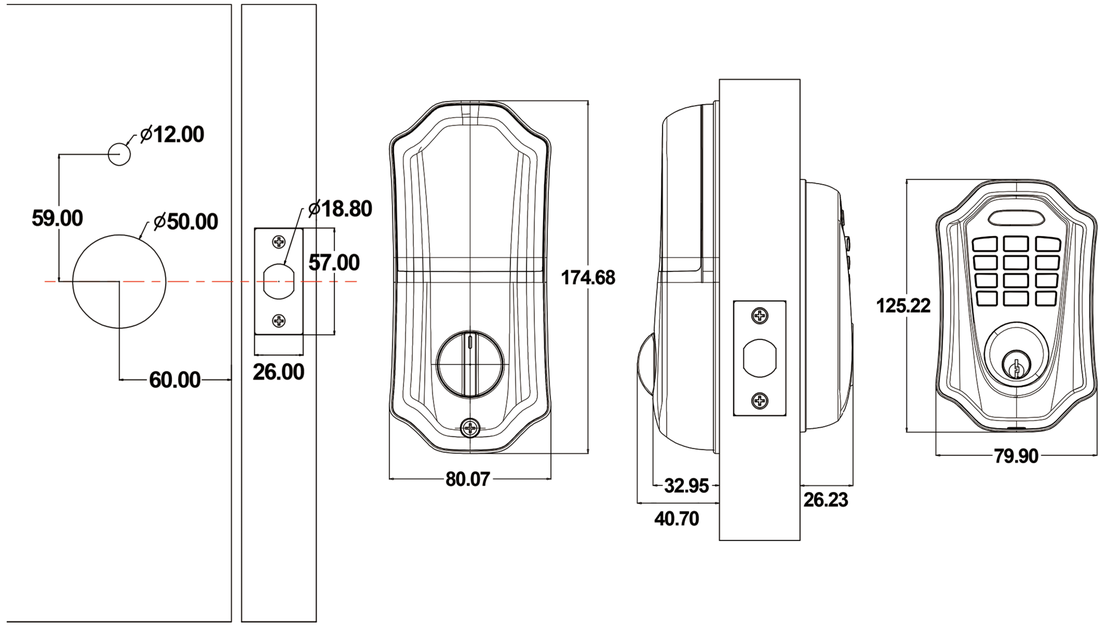

Install(Right Open Door)

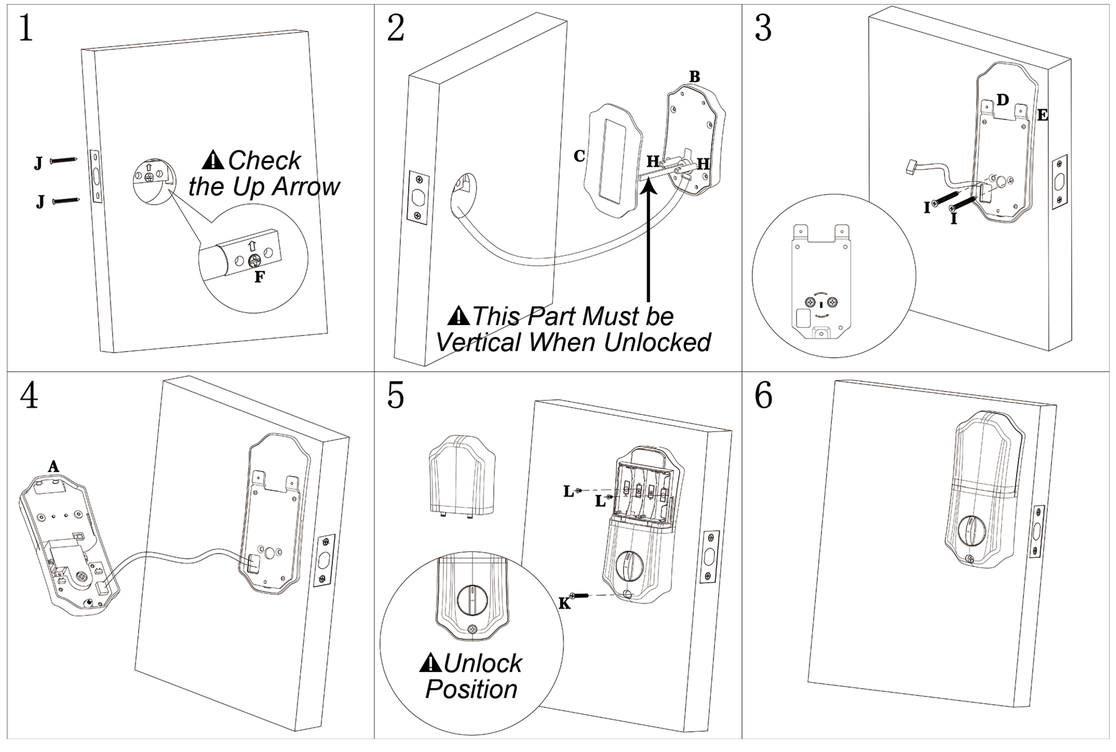

FG01 (Manual version beta3.0)

The App Manual

Work with Alexa

Download

TuyaSmart

Download on the App Store | GET IT ON Google Play

We suggest you use your own account to add a device. In order to protect your safety, the device is bound to the account. Even if you use the reset button, you can't unbind it unless you remove the device in app. If you need more than one person to use this device, please share permissions through the member management in the device settings, thank you.

1. Before start, install the lock correctly and power the gateway

2. Login TuyaSmart

3. Turn on the bluetooth on your phone ⚠ Bluetooth 4.0 or above needed

4. In TuyaSmart Home Page, press the "Add Device" button or "⊕"

5. Wait the addable device to show

6.2 Add the Lock

Press "⊕" to add the lock

---

7. Set the Lock(in the Smart Lock Page)

7.1 Set motor rotation direction

Get in the Set Page

↓

Find motor rotation direction

→ Right hand open/swing door: clockwise unlock

→ Left hand open/swing door: anticlockwise unlock

8. Set password

Get in Set Page

Press the "🔒" and set 6-digit code

(Don't forget the password name)

9. Share the permission

Get in Member management Page

Share your permission to others

The Unlock Ways

1. Key
2. Knob
3. Keypad Password then "#"
4. TuyaSmart App unlock
5. Alexa App unlock(optional)
6. Voice unlock(optional)

The Lock Ways

1. Key
2. Knob
3. Long press "#" on Keypad
4. Auto lock(optional, can't work when unlock by key or knob, set in lock's set page[automatic lock switch])

⚠ *When auto lock enabled, if you want to lock at once, disable the auto lock setting, lock it then enable auto lock again.*

Usage Scenario

A.When you enter the door

1.Password unlock
2.Bluetooth App unlock
3.Remote App unlock
(need extra bluetooth gateway)
4.Physical Key unlock

B.When you go out

1.Long press "#"
2.Remote App lock

C.When someone comes

1.Turn the knob to unlock
2.Bluetooth App unlock
3.Voice unlock
(need extra bluetooth gateway and amazon voice device)
4.Remote App unlock
(need extra bluetooth gateway)

D.When someone needs a single unlock

1.Set in app, slide to obtain dynamic password
(remote set need extra bluetooth gateway)

E.You are the landlord or you want to share the permission

1.Check the member management in app and add members

F.You no longer use this lock, and others use your lock

1.No need to reset, in app main page, press and hold to remove the device

FCC Caution.
This device complies with part 15 of the FCC Rules. Operation is subject to the following two conditions: (1) This device may not cause harmful interference, and (2) this device must accept any interference received, including interference that may cause undesired operation.
Any Changes or modifications not expressly approved by the party responsible for compliance could void the user's authority to operate the equipment.
Note: This equipment has been tested and found to comply with the limits for a Class B digital device, pursuant to part 15 of the FCC Rules. These limits are designed to provide reasonable protection against harmful interference in a residential installation. This equipment generates uses and can radiate radio frequency energy and, if not installed and used in accordance with the instructions, may cause harmful interference to radio communications. However, there is no guarantee that interference will not occur in a particular installation. If this equipment does cause harmful interference to radio or television reception, which can be determined by turning the equipment off and on, the user is encouraged to try to correct the interference by one or more of the following measures:
-Reorient or relocate the receiving antenna.
-Increase the separation between the equipment and receiver.
-Connect the equipment into an outlet on a circuit different from that to which the receiver is connected.
-Consult the dealer or an experienced radio/TV technician for help.
This equipment complies with FCC radiation exposure limits set forth for an uncontrolled environment. This equipment should be installed and operated with minimum distance 20cm between the radiator & your body.