XWOW

Product Manual

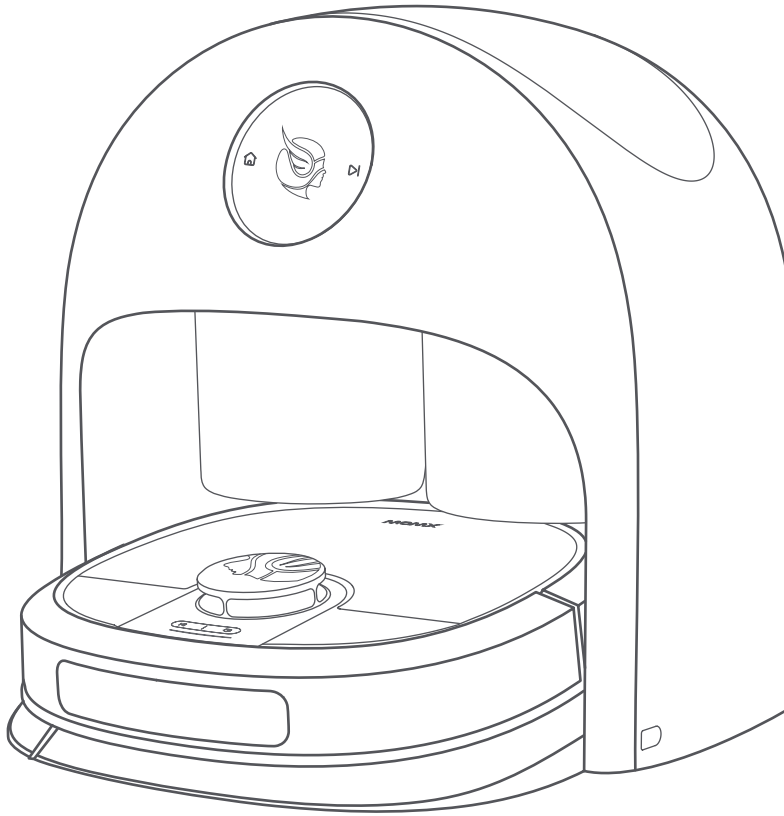

XWOW Robot Vacuum and Mop

Product model: R2 R2-ST

Welcome to the world of XWOW

WELCOME

Keep your home clean and tidy,
even in invisible places.

Dear customer:

Thank you for choosing [XWOW Robot Vacuum and Mop]. Before use, please carefully read and properly save this Product Manual.

If you have any questions when using, you can contact us through the following method:
Email: zbmarketing @ zbeetle.com

You can submit your suggestions or questions through the [Profile-Help and feedback] module in [XWOW] app, and leave your contact information. We will contact you as soon as possible.

Note: The illustrations for product, accessory, and user interface in this Product Manual are only for reference. This product is subject to change due to constant product updates.

CONTENTS

Introduction 05
Package list 06
Product details 09
Introduction to operation panel 14

Product use 16
Special tips 17
First use 20
Introduction to sweeping and mopping functions 22
App introduction and operation 24

Cleaning and maintenance 27

Common issues analysis 38

Product specifications 42

INTRODUCE

Package list

Standard accessories

Station×1

Clean water tank×1

Sewage tank×1

Cleaning filter×1

Robot×1

Mid brush×1

Mid brush cover plate×1

Dust bin (including: a dust bin filter)×1

Sewage box×1

Small cleaning tool×1

Side bar×1

Accessories

Side brush×1

Mop support & mop×1

Mop scraper×1

Others

Cleaning brush×1

Power cord×1

Robot | Main body

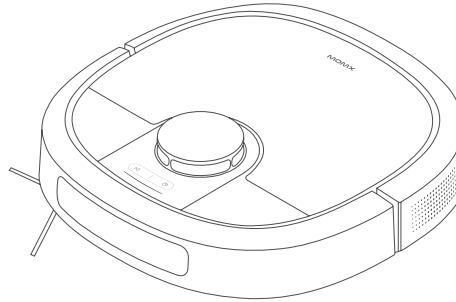

Robot×1

Robot | Accessories

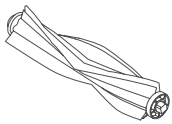

Mid brush×1

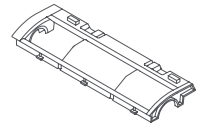

Mid brush cover plate×1

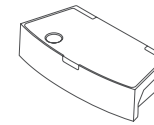

Sewage box×1

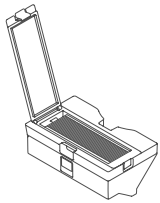

Dust bin (a dust bin filter included)×1

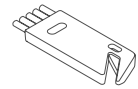

Small cleaning tool×1

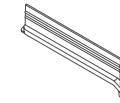

Side bar×1

Station | Main body

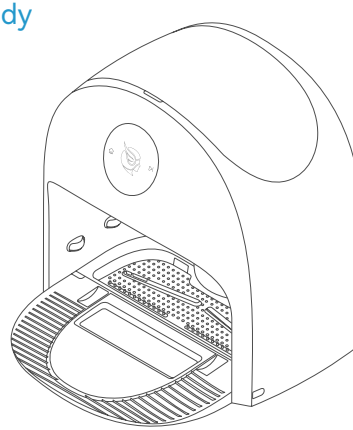

Station×1

Station | Accessories

Clean water tank×1

Sewage tank×1

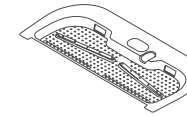

Cleaning filter×1

Accessories

Side brush×1

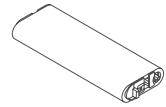

Mop support & mop×1

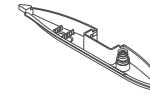

Mop scraper×1

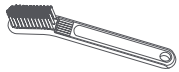

Cleaning brush×1

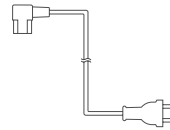

Power cord×1

Front side of robot

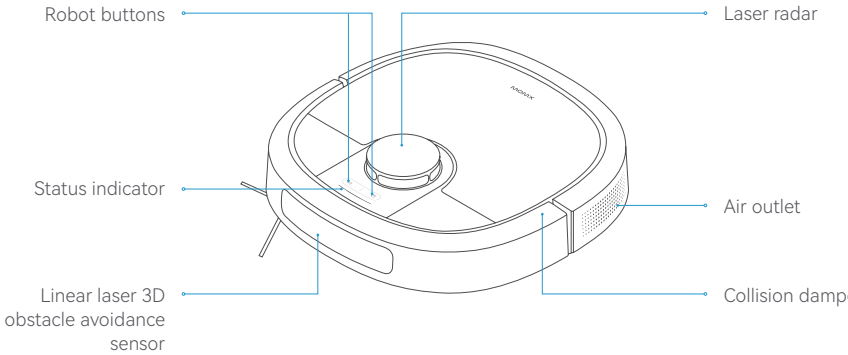

Top

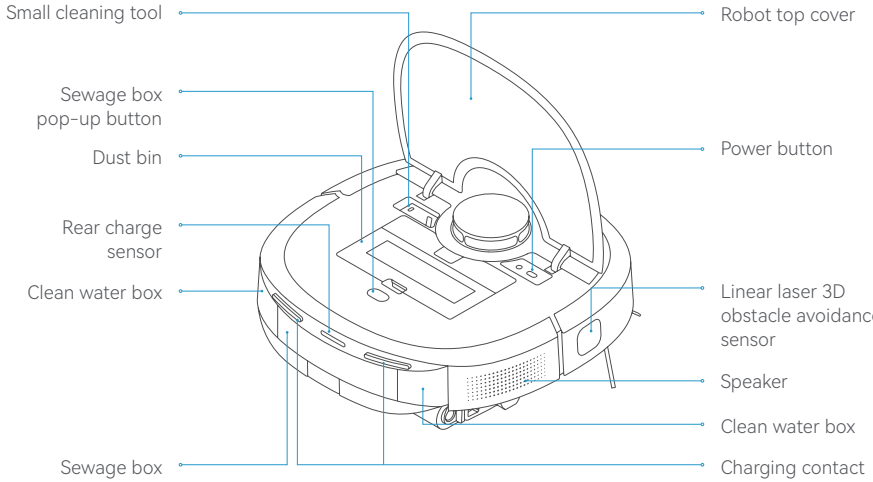

Internal part

Back side of robot

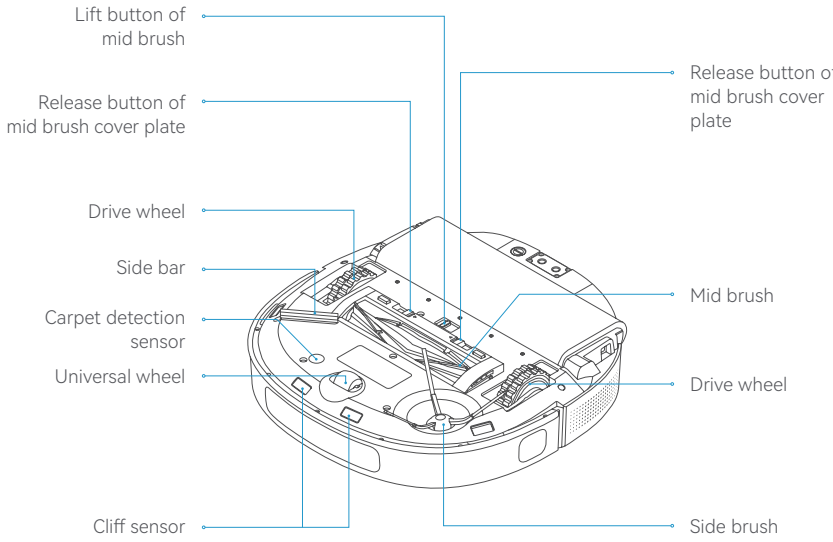

Bottom

Dust bin components

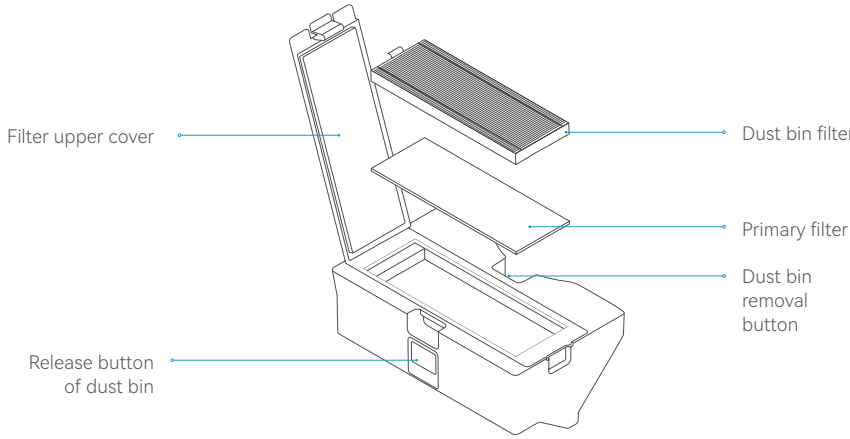

Sewage box components

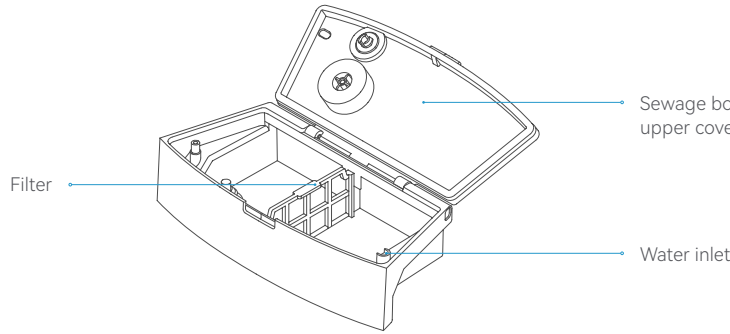

Sweeping components

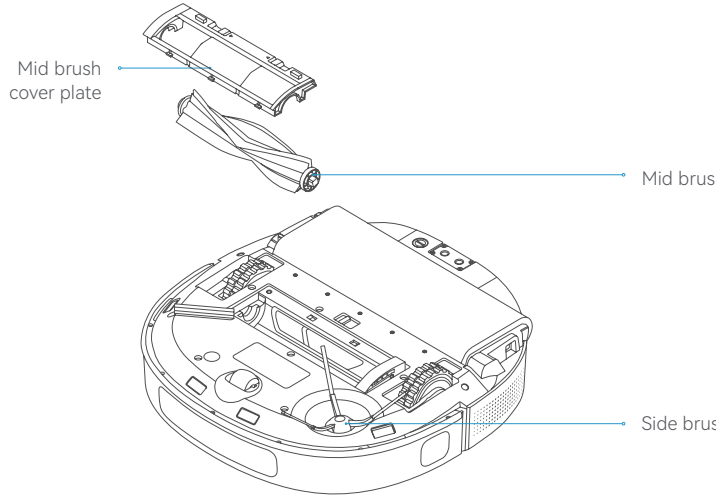

Mopping components

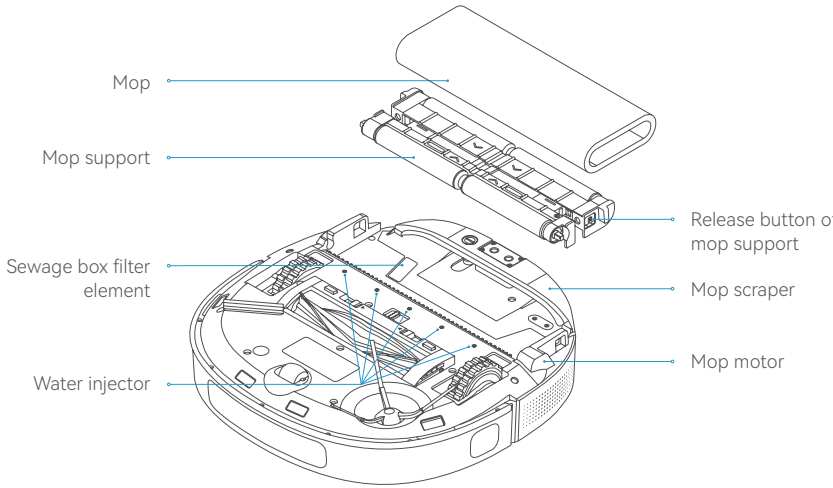

Front side of station

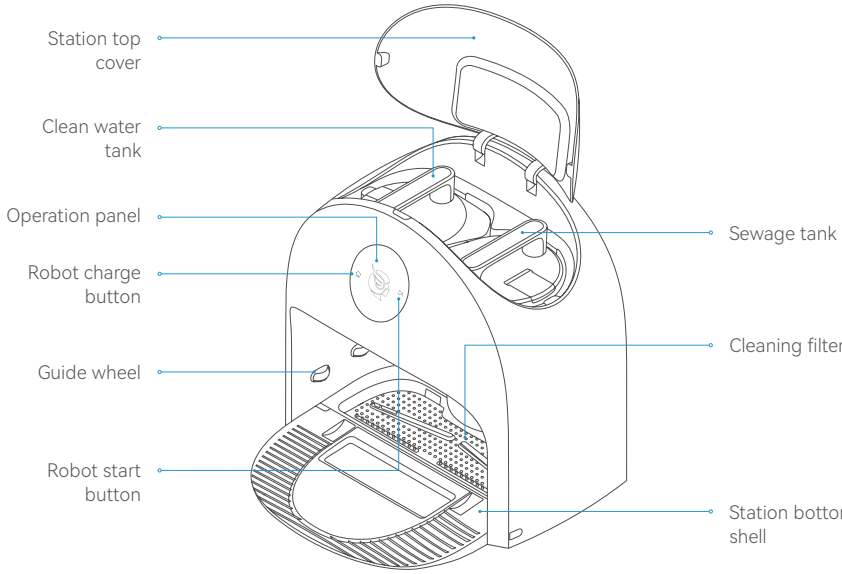

Back side of station

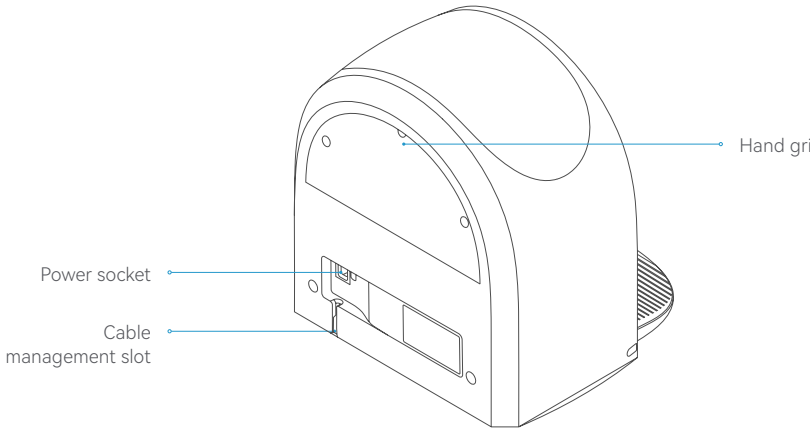

Robot operation panel

Blink red: Error

Blink orange slowly: Connecting to network

Status indicator

Blink dark blue slowly: Working

Blink light blue slowly: Pausing

Press: Start/pause charge

Press and hold: Partial cleaning

Press and hold for 3s: Entering menu

Charge button

Press two buttons simultaneously

3 seconds: on/off Child lock
6 seconds: Reset Wi-Fi
15 seconds: Restore factory setting

Start button

Press: Start/pause cleaning

Press and hold for 3s: Confirm the selection in menu

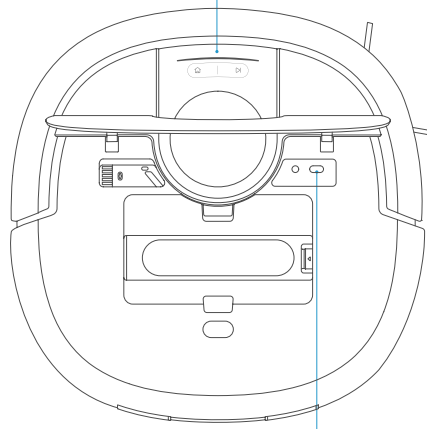

Power button

Press and hold for 6 seconds: Turn on/off

Station operation panel

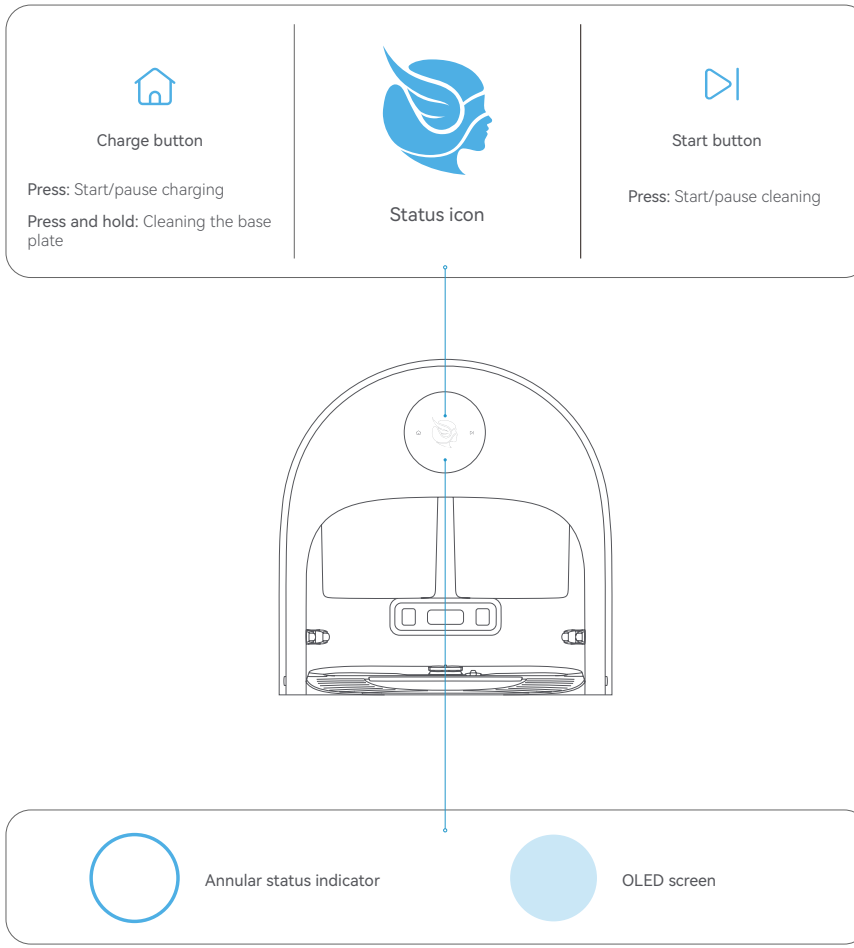

PRODUCT USE

Precautions & Warnings

Before use, please keep vigilant and pay attention to the followings: When using the product, please carefully read this Product Manual, and keep it properly.

1. Be sure to recognize issues that may occur during cleaning as soon as possible. Clean up power cables and small items on the floor to avoid obstruction during the cleaning process. Keep the robot away from the carpet as much as possible. Prevent hanging curtains and tablecloth from touching ground.
2. If there are suspended environments such as stairs, please test whether this product can detect these area edges without falling off. Set up restricted zones/virtual walls at suspended area edges using [XWOW] app to prevent this product from falling off.
3. Please follow the Product Manual to use this product. Only use accessories and cleaning detergent recommended or sold by the manufacturer.
4. Please make sure that the power voltage is in line with the one marked on the station.
5. Before use, make sure that the mop support, mop, dust bin and filtration materials have been installed in place.
6. To avoid danger, any damaged power supply cord must be replaced by the manufacturer repair department or professionals from a designated institution.
7. Before cleaning and maintaining the robot, please turn off this product first.
8. Before cleaning and maintaining the station, make sure that the plug has been removed from the power socket.
9. Before discarding this product, please remove this product from the station, turn off the power switch and remove the battery. Used batteries must be disposed of in accordance with local laws and regulations.
10. If this product is idle for a long time, please power it off.
11. Children under 8 years old or the mentally disturbed are prohibited from using this product. If it is indeed necessary to do so, such users need to use this product under supervision and guidance of their guardians. Do not let children sit on this product or play it as a toy to avoid unnecessary danger.
12. Only use this product in indoor house environment. Do not use this product outdoors (including in open balconies), commercial or industrial places.
13. Do not use this product in baby or toddler bedrooms.
14. Do not use this product with damaged power cable or power socket. Do not use this product if it fails to work due to falloff, damage, outdoor use, or water damage. To prevent injury, this product must be repaired by manufacturer or its after-sales customer service team.
15. If the robot is in the station, do not pick up the station to prevent the robot from falling off and causing unnecessary harm.
16. Please follow the Product Manual to use this product. Our company is not liable for any loss and injury caused by improper use.
17. Only use original station assembled by the manufacturer. It is prohibited to replace batteries. In case of suspected battery errors, please contact manufacturer, authorized distributor or professionals in a similar institution.
18. It is prohibited to use this product in an environment with open flame or fragile items. It is prohibited to use this product in an extremely hot (>40° C) or an extremely cold (<0° C) environment.
19. As the robot and station are not water-proof, please do not directly flush them with water during cleaning and maintenance to avoid product malfunction due to water damage, which will affect product warranty.
20. During maintenance, please stop the robot and make it stand up with the mop scraper on the floor to avoid product malfunction due to water damage, which will affect product warranty.
21. When cleaning or moving the station, please power it off first and drain water from the station bottom shell before movement. During moving, do not tilt the station too much to avoid product malfunction due to water damage, which will affect product warranty.

Special tips

Please make sure that the robot is not in a suspended environment.

Do not start the robot on a desk, sofa or other places with certain height from the ground.

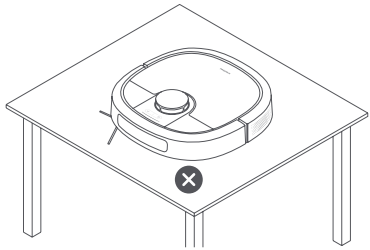

Prevent the robot from being pressed by any objects.

Do not place any objects, including persons, pets or other objects with certain weight on robot no matter when it is static or moving.

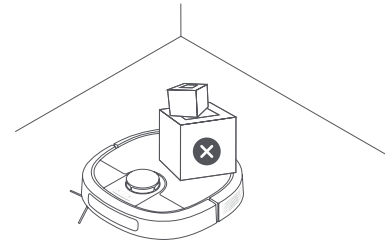

Protect children nearby.

To avoid injury, do not put hair or fingers near or into the robot's mop, side brush, radar, suction inlet, station water tank, or station bottom shell when the robot is working.

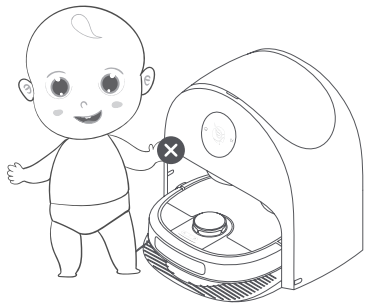

Beware of sharp objects.

Do not use the robot to collect hard or sharp objects to avoid machine error.

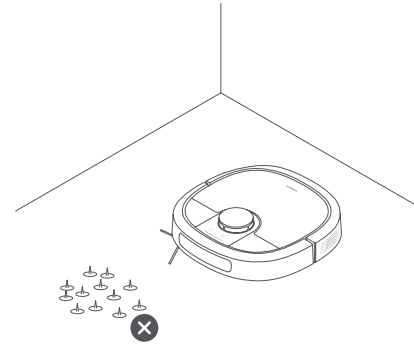

Special tips

Clean up rooms.

Before startup, clean up cables and sundries scattered on the ground, and remove objects that are prone to fall off, fragile objects, valuable objects, and objects that may cause danger. Prevent the robot from being tangled, stuck, or dragged, which may cause damage to person or property.

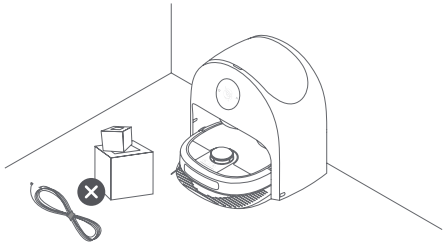

Prevent the robot from falling off.

If your house is multistorey, the robot may execute a task at staircase or step edges. Please place protecting facilities or set up restricted zones or virtual walls in the app to ensure safe operation.

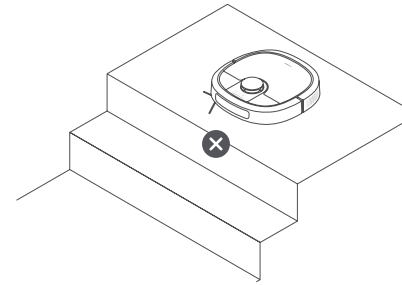

Open doors of all rooms to be cleaned.

To help XWOW explore the entire space and conceive a complete map, during first use, it is recommended to open the doors of all rooms to be cleaned to ensure smooth operation.

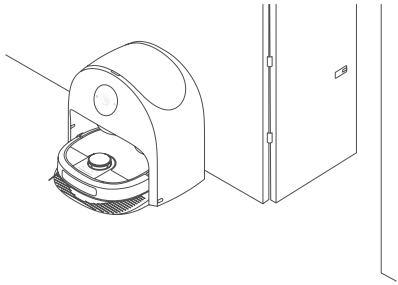

Pay attention to carpet areas.

Pay attention to carpet areas. If there is carpet at home, please set up restricted zones or virtual walls for it to avoid dirt and tangling.

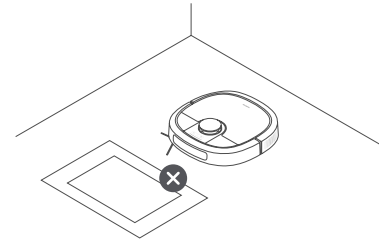

1. Install accessories properly.

Before first use, please make sure that each accessory has been installed properly, including: station clean water tank and sewage tank, robot mid brush, side brush, mop scraper and mop.

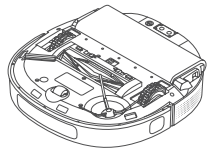

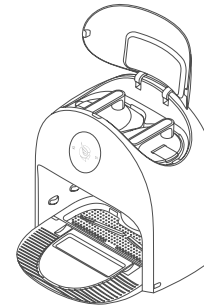

2. Please put the station in a room against walls, and connect it to power supply.

Retain an open area with at least 100 cm on both sides and 150 cm at the front. For better app interaction, make sure that the place where the station locates has strong network signals.

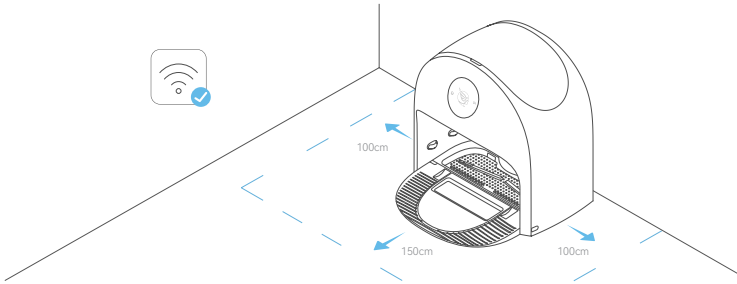

3. Make preparations before cleaning.

Remove the transportation protection foam for the cleaning filter on the bottom of the station. Then, supply the clean water tank with proper amount of clean water.

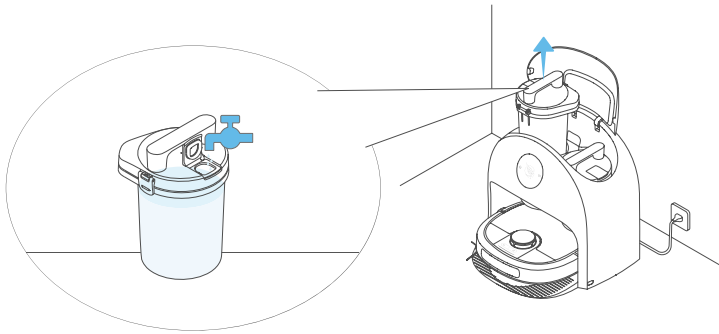

4. Turn on and charge the robot.

Press and hold the Power Button until the power supply indicator is solid on. Then, put the robot into the station as shown in the figure. The robot is built in with a high-performance Lithium ion chargeable battery pack. To maintain the battery performance, please keep a sufficient battery level.

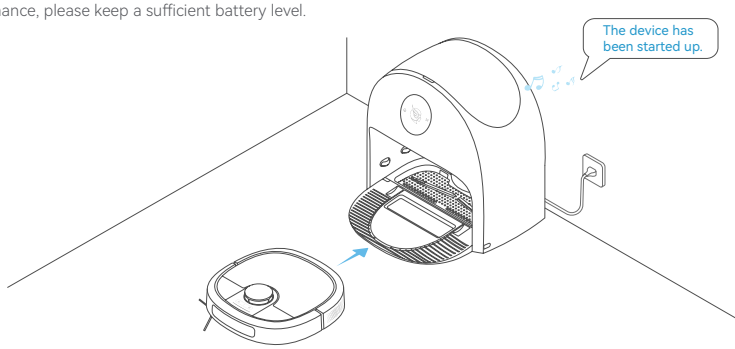

5. Connect the robot to network.

Press the Charge Button and Start Button on the robot at the same time for about 6 seconds. Finish network connection based on voice prompts and app steps. After network connection done, you can start a cleaning task using the phone (Note: Please make sure that the robot has been installed with mop before starting a cleaning task).

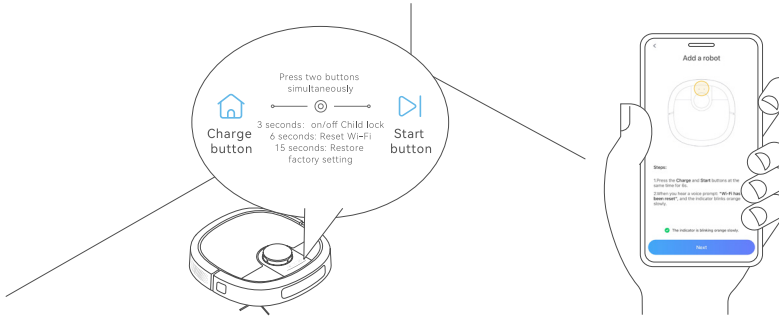

6. Do not move the station after mapping.

If the house environment changes a lot, the robot will remap; on the map conceived after mapping done, rooms are divided based on floorplan. Then, you can use more personalized cleaning settings in future cleaning.

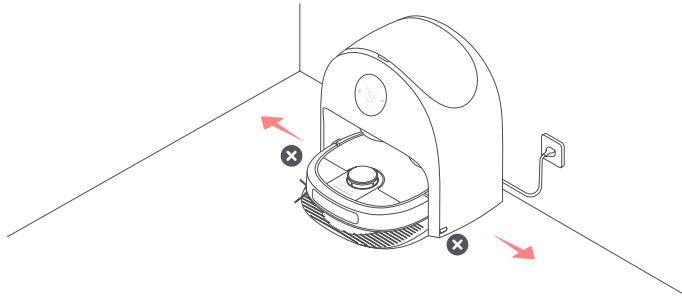

1. Start of a cleaning task

The robot will plan the optimal cleaning path and scheme based on the conceived map. If there are no special settings, the robot will clean the room farthest from the station first.

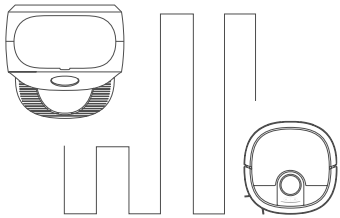

2. Automatic return to clean mop

During cleaning, the robot will automatically return to the station to clean mop while draining sewage and refilling clean water. Do not move the station, water tank, or cleaning filter.

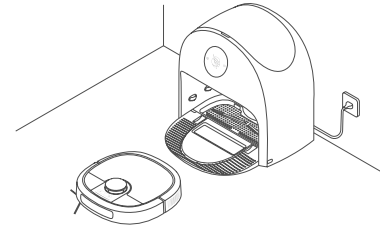

3. Voice prompts for errors

If the robot is stuck or has other accidents during cleaning, you will hear a voice prompt, and the app will also display a prompt.

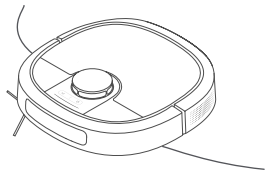

4. Completion of a cleaning task

The robot will automatically return to the station for sewage draining, clean water refilling, cleaning and mop hot air drying, and so on.

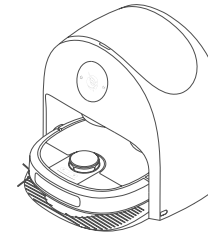

5. Robot maintenance

Clean the sewage box, mop scraper, dust bin, mid brush and side brush regularly to ensure cleaning performance.

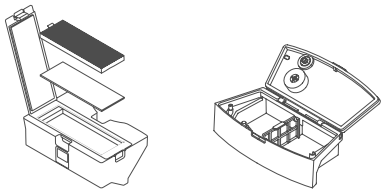

6. Station maintenance

Please timely clean the sewage tank to avoid unpleasant odor.
Notice: Only when the station is idle.

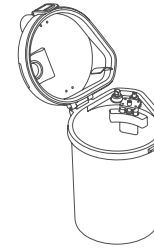

Other recommendations

1. Before first use, it is recommended to fully charge the robot. Charging takes about 6 hours.
2. To help robot return to the station for automatic mop cleaning, clean water refilling, sewage draining, and charging after a cleaning task is finished, it is recommended to let the robot depart from the station. In addition, do not move the station, remove the clean water tank/sewage tank, or remove the filter during cleaning.
3. Do not add unauthorized cleaning detergent. Otherwise, this may affect the station self-cleaning function and cause the robot to skid.
4. If there is no task, the robot will enter sleep status after pausing for 10 minutes.
5. After the robot pauses or reports an error during work and there is no response after 10 minutes, the robot will enter the sleep status and automatically end the current task in situ.
6. When the robot completes tasks, battery level lower than 20%, clean water box empty, or sewage box full, the robot will automatically return to the station to clean the mop. After the robot is charged to an appropriate battery level or after mop cleaning is finished, the robot will continue to clean the area where it stopped.
7. Based on default cleaning path, the robot will clean a room along the wall first, and then move back and forth in a S-shaped path. By default, if there is no personalized setting, the robot will clean the room farthest from the station.

Description of some common functions

1. Pause: When the robot is executing a cleaning task, press the Start Button to pause the cleaning task, and press the button again to continue cleaning; and press the Charge Button to return to the station to charge. The cleaning task will be ended if you put the robot back into the station for charging when pausing.
2. Sleep: The robot will be standby when it is paused for more than 10 minutes. If there is no operation after the robot is standby for 10 minutes, status indicator will shut down. Press any button to wake the robot up. When the robot is charging, it will not enter the sleep status. The robot will automatically turn off after the sleep status lasts for over 6 hours.
3. Do Not Disturb mode: After Do Not Disturb mode is enabled (which is disabled by default), the default Do Not Disturb period is from 10:00 p.m. to 08:00 a.m. You can change it by using the phone app. During the Do Not Disturb period, the robot voice prompts will be disabled and the robot will not continue to clean the area where it stopped.
4. Charging: After a cleaning task is ended, the robot will automatically return to the station to charge. During charging, you can check battery level on the station screen or phone app. If the robot cannot find the station, it will automatically return to the departure point. Please manually put the robot back into the station.
5. Abnormal status: The indicator blinks red quickly and you will hear a voice prompt. For solutions, please refer to the app or “Common issues” in this Product Manual. If there is no operation after the abnormal status lasts for 10 minutes, the robot will automatically sleep.
6. Restore factory setting: To restore factory setting, please press and hold the Start Button and Charge Button on the robot at the same time for 15 seconds when the robot is turned on. After you hear a voice prompt saying that [Restoring factory setting succeeded], the robot will restore to its ex-factory status. All saved data will be cleared up.

Using the robot with a phone will bring you more convenient operation and personalized experience!
The instruction for downloading app and binding the robot is shown below:

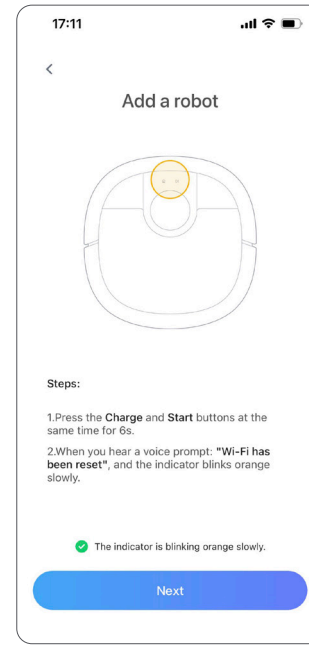

1. Download App

You can scan the above QR code to download or search for [XWOW] in the [App Store] on your phone to download the app.

2. Reset Wi-Fi

Open the robot upper cover. Then, you can see the Wi-Fi status indicator. Press the Start Button and Charge Button at the same time until you will hear a voice prompt saying that [Wi-Fi resetting completed. Go to network connection mode].

Please check that:
-The Wi-Fi indicator starts to blink slowly.
Check this in the app and proceed to the next step.

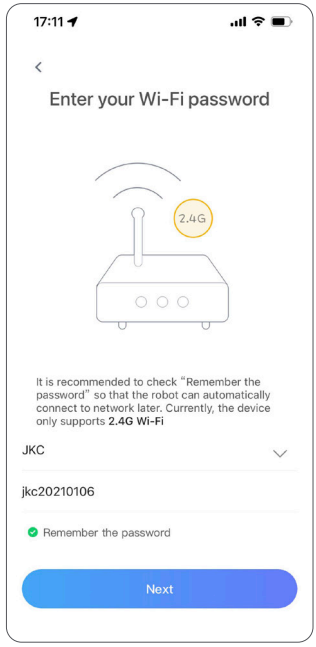

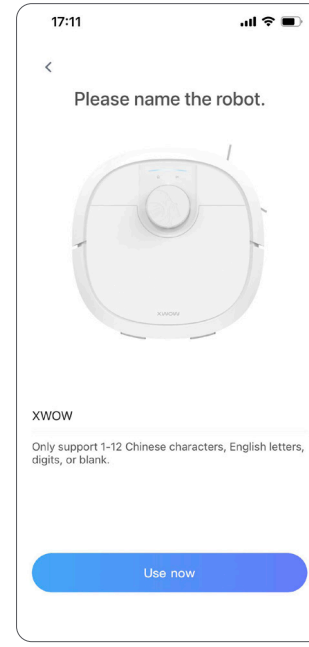

3. Connect to internet

The network environment is stable and available (only supports 2.4GHz Wi-Fi). Launch the phone app. Tap the [+] in the top-right corner on the home page. Add your robot based on prompts.

Before startup, please check that:
-The robot has been turned on (Status indicator is solid on).
-The internet is available and stable.
-The phone has been connected to this Wi-Fi.

4. Complete network connection

Stay on the app page, wait until the device searching is finished and the network is connected. Then, you can control your robot and set its clean mode using the phone app.

Introduction to main app functions

Tips: The functions and details are subject to minor changes due to constant app development and updates. Please refer to the actual version.

Map management

Single map/ Multiple maps management | Real-time path | Carpet avoidance | Automatic room division | Map editing

Personalized clean mode

Global cleaning | Room cleaning | Cleaning by division | Restricted zone & virtual wall | Virtual doorsill | Mop cleaning

Clean mode selection

Mop & Sweep/ Mop only/ Sweep only | Personalized setting | 3 levels of humidity/ suction

Robot information

Cleaning records | Robot battery level | Repair and maintenance

More functions

Firmware and app update | Volume and language adjustment | Cleaning appointment | Do Not Disturb mode | Family sharing

MAINTENANCE

To maintain optimal performance, it is recommended to refer to the table below for daily maintenance:

Tips: The replacement frequency is determined based on actual conditions. In case of abnormal wear and tear, timely replace the accessories.

Component position	Name	Maintenance cycle	Replacement frequency
Robot	Dust bin	Clean after every cleaning task completed (recommended)	/
	Dust bin filter	Clean once every two weeks	Every 3-6 months
	Mid brush	Clean once every week	Every 6-12 months
	Side brush	Clean once every two weeks	Every 3-6 months
	Mop	Maintenance as required	Every 1-3 months
	Drive wheel	Maintenance as required	/
	Universal wheel	Maintenance as required	/
	Sensors	Clean once every two weeks	/
	Sewage box	Clean after every cleaning task completed (recommended)	/
	Charging contact	Clean once every two weeks	/
	Mop scraper	Clean once every week	Replace as needed
	Sewage filter element	Clean once every two weeks	Every 3-6 months
Station	Cleaning filter	Clean once every two weeks	/
	Clean water tank	Clean once every three months	/
	Sewage tank	Clean after every cleaning task completed (recommended)	/
	Charging sheet, signal emitting area, and station body	Clean once every two weeks	/

Robot | Mop support & mop

Removal

1. Press the gray buttons on both sides of the mop support. Flip the support upwards and remove it.
2. Clench the mop support to remove the mop.

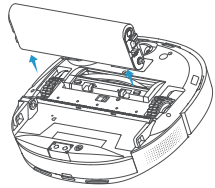

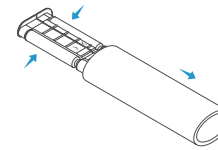

Installation

1. Put a mop on the mop support from an end of it.
2. Hold both sides of the mop support.
3. Fasten it downwards to the robot. After you hear a click sound, it indicates that the mop has been installed properly.

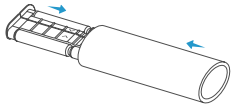

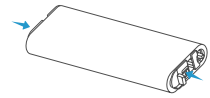

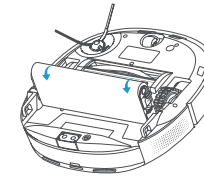

Cleaning and maintenance

1. Remove the mop based on the guiding steps in [Installation/Removal].
2. Based on mop humidity, flush the mop with tap water, and put it back into the robot.

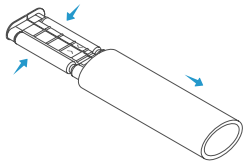

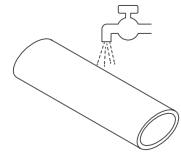

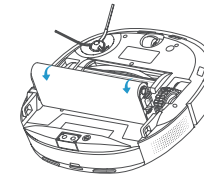

Robot | Sewage filter element

Removal

1. Please remove the mop support first.
2. Lift the sewage filter element upwards.

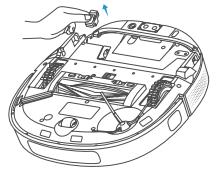

Installation

1. Align and install the sewage filter element downwards.

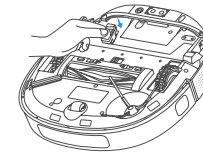

Cleaning and maintenance

1. It is recommended to replace it in 3-6 months.

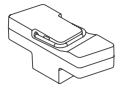

Robot | Sewage water box

Removal

1. Open the robot upper cover.
2. Press [Pop-up] button

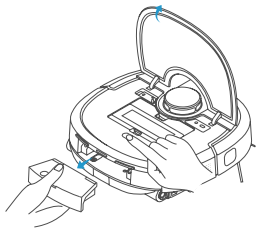

Installation

1. Push the shorter side of the sewage water box into the robot.
2. After you hear a click sound, it indicates that the box has been installed properly.

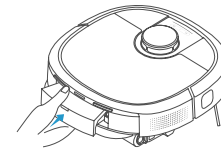

Cleaning and maintenance

1. Wipe it with soft cloth or flush it with tap water before putting it back.
2. Replace it with a new one based on actual condition.

Robot | Mop scraper

Removal

1. To remove mop scraper, make sure that the mop support has been removed first.
2. Buckle two sides with two fingers and push the mop scraper inwards gently to remove it.

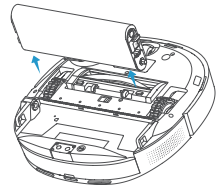

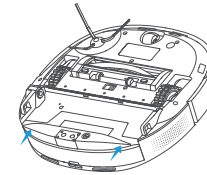

Installation

1. Align the locating rod with locating box [1] and then put it downwards.
2. Press the places indicated by arrows with thumbs and push the locating rod to locating box [2].

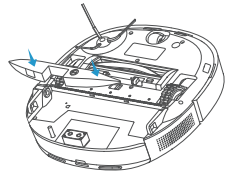

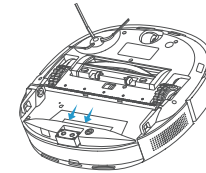

Cleaning and maintenance

1. When you notice that sewage has reached the max line, clean the mop scraper immediately.
2. Flush it with tap water before putting it back.
3. Replace it with a new one based on actual condition.

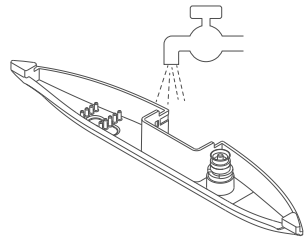

Robot | Dust bin & Dust bin filter

Removal

1. Press the dust bin buckle, and remove the dust bin from the top.
2. Press the release button of dust bin to dump garbage.
3. Open the filter upper cover on one side of the dust bin to remove the filter.

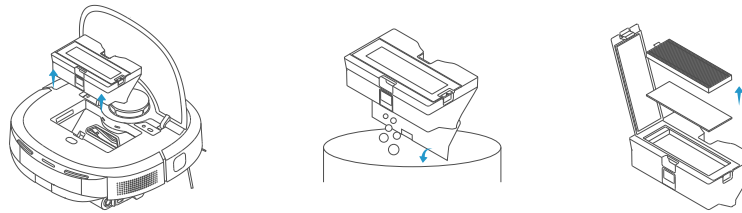

Installation

1. Open the upper cover on one side of the dust bin to put the filter back.
2. Open the robot upper cover, and put the dust bin back.

Cleaning and maintenance

1. Flush the dust bin filter with clean water, and dry it before next use.
2. It is recommended to use at least two filters alternatively.
3. Replace it with a new one based on actual condition.

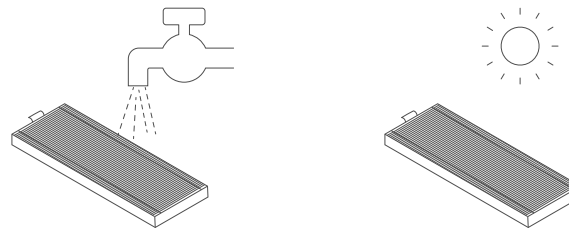

Robot | Mid brush

Removal

1. Press the release button on mid brush upper cover with two hands. Remove the upper cover and take out the mid brush.

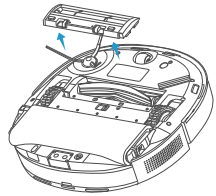

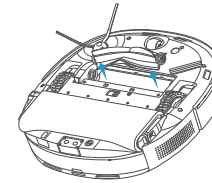

Installation

1. Align the mid brush with the bearing reserved port and put it inside.
2. Insert the 3 teeth on the mid brush upper cover into the reserved port.
3. Press the release button tightly downwards.

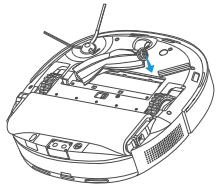

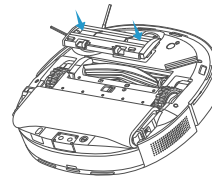

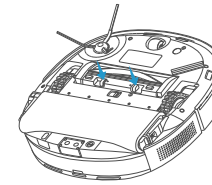

Cleaning and maintenance

1. Use the small cleaning tool that comes with the robot to clean tangled hair.
2. Flush dirt with water, and dry it before next use.
3. Replace it with a new one based on actual condition.

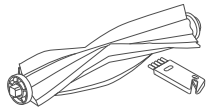

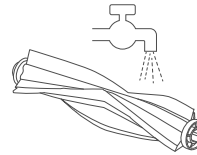

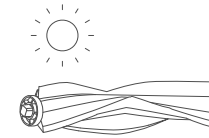

Robot | Side brush

Removal

1. Slightly snap the side brush and lift it up.

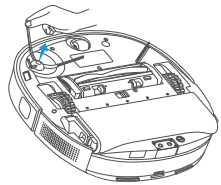

Installation

1. Align and press the side brush with the convex surface downwards. After you hear a click sound, it indicates that the side brush has been installed properly.

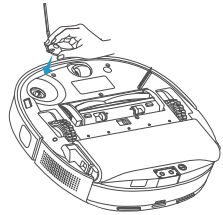

Cleaning and maintenance

1. Use the small cleaning tool that comes with the robot to clean tangled hair.
2. Flush dirt with water, and dry it before next use.
3. Replace it with a new one based on actual condition.

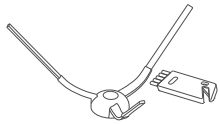

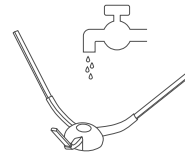

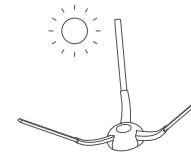

Robot | Side bar

Removal

1. Remove the fixed screws with a screwdriver.
2. Remove the side bar and soft rubber.

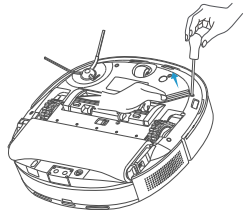

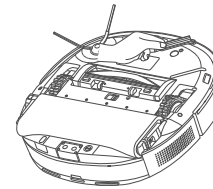

Installation

1. Install the side bar and soft rubber into the reserved groove.
2. Tighten the fixed screws with a screwdriver.

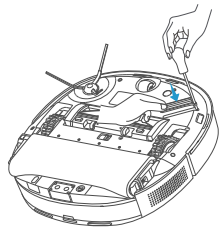

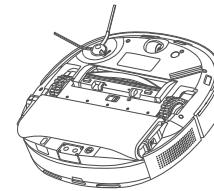

Cleaning and maintenance

1. Replace it with a new one based on actual condition.

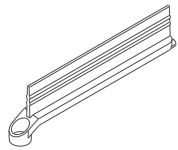

Robot | Drive wheel & Universal wheel & Sensors

Cleaning and maintenance

1. The drive wheel & universal wheel & all of sensors cannot be removed. Please wipe them with soft cloth.

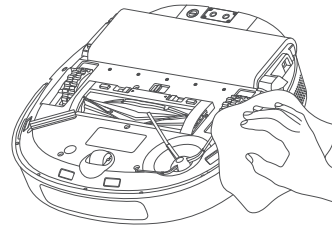

Station | Cleaning filter & station bottom shell

Cleaning and maintenance

1. Please use a cleaning brush to clean the filter.
2. Wipe the charging sheet with a soft cloth to ensure good contact.

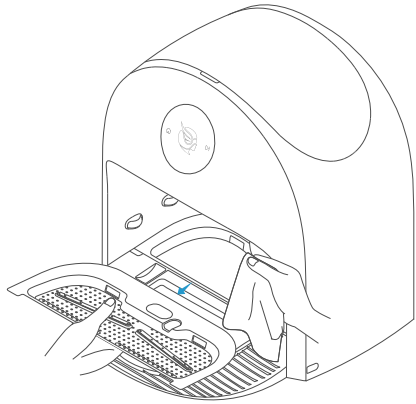

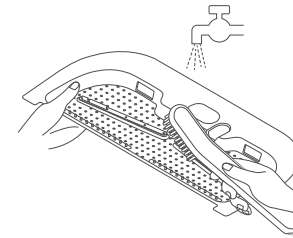

Station | Clean water tank & Sewage tank

Removal

1. Open the cover plate on the top of the station, and lift tank up.

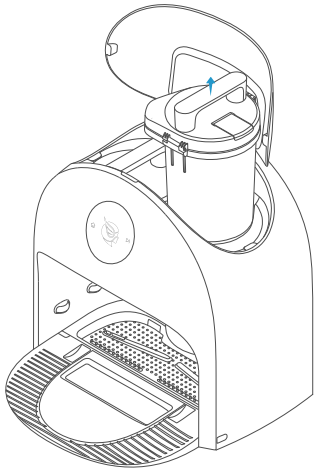

Installation

1. Open the cover plate on the top of the station.
2. Align and install the clean water tank to the left side, and the sewage tank to the right side.

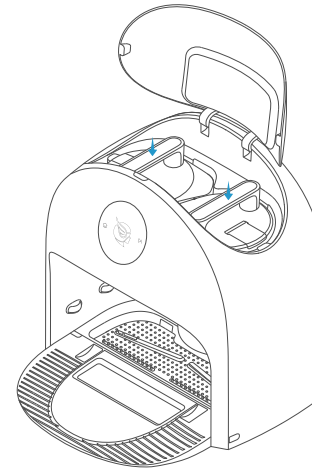

Cleaning and maintenance

1. Flush it with tap water, fasten the water tank, and put it back before use.

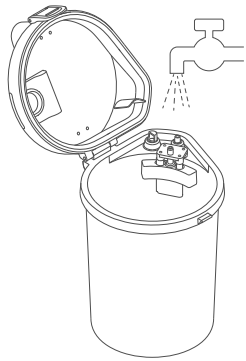

COMMON ISSUES ANALYSIS

Common issues

Issue type	Possible reasons	Solution
App installation and use	The operation system version of the phone is too old.	The operation system version of the phone is too old.
	The app is not authorized to access to internet.	Allow the app to access to the internet on phone settings.
App account registration	The phone number has been bound through a third-party login method.	Log into the app by texting a verification code to the phone number.
App network connection process	1. There is an order of clicking buttons. 2. The robot is not in standby status. 3. There is an internal error with the robot system.	1. Press the Charge Button and Start Button on the robot at the same time. 2. Make sure that the robot is not executing a task when connecting it to network. 3. Restart the robot.
	1. Fail to allow the app to access to location. 2. Fail to enable the phone's GPS location.	1. Allow the app to access to the location information on phone settings. 2. Enable the phone's GPS locating function.
	1. Fail to enter network connection mode. 2. If the network connection exceeds 2 minutes, the robot will exit network connection mode.	1. Press and hold the Charge Button and Start Button on the robot at the same time to connect to network. 2. Please redo the network connection process, and finish network connection within two minutes.
	1. Return to the app before connecting to the hotspot started with XWOW. 2. The phone system detects that the hotspot started with XWOW has no internet.	1. Please connect to the hotspot started with XWOW. 2. After manually device search, connect to the internet at home and select the hotspot started with XWOW. Then, return to the app to continue network connection.
	1. The Wi-Fi password is incorrect. 2. The Wi-Fi at home is a 5GHz network. 3. The Wi-Fi connected to the robot has poor signals.	1. Please enter a correct Wi-Fi password. 2. The robot only supports 2.4GHz network for network connection. 3. Please make sure that the robot is covered by the router network and the connected Wi-Fi has strong signals.

Common issues

Issue type	Possible reasons	Solution
Robot offline	1. When the robot is turned off, the app cannot connect to the robot. 2. The location of the robot has poor signals or the network is unstable.	1. Please press and hold the power button to turn on the robot. 2. When the robot is functioning, the offline status will not affect the cleaning progress. When network signals become strong, the robot will automatically restore to online status.
Fail to turn on/off	1. The robot battery level is insufficient. 2. There is an internal error with the robot system.	1. Please put the robot back into the station to charge. 2. Please restore the robot to factory setting. If the issue persists, please contact customer services.
Fail to connect to the robot	1. The robot isn't turned on. 2. There is an internal error with the robot system.	1. Please press the power button to turn on the robot. 2. Restart the robot. If the issue persists, please contact customer services.
There is no response after pressing the buttons	1. There is an internal error with the robot system. 2. There is an error with the robot radar system, which cannot rotate smoothly and release signals.	1. Restart the robot. If the issue persists, please contact customer services. 2. If it is confirmed that the radar fails to rotate and release red light, please contact customer services.
The robot has an abnormal sound	The mid brush or side brush may be tangled by foreign matters.	Please check whether the mid brush or side brush have been tangled with foreign matters. If so, clean them. If abnormal sound persists after cleaning, please detach the mid brush and side brush for further cleaning.
Fail to charge	1. The power button on the robot is not turned on. 2. The station is not connected to the power supply. 3. The charging sheet is not correctly connected after you manually put the robot in the station. 4. The battery has been idle for a long time.	1. Make sure that the power button on the robot has been turned on. 2. Make sure that station has been powered on. 3. Please press the charge button on the station to control the robot return to the station for charging. 4. It is recommended NOT to leave XWOW in idle status for a long time. If it cannot be charged for a long time, contact customer services.

Common issues

Issue type	Possible reasons	Solution
Fail to return to the station	1. The station is put in an incorrect position. 2. The station is powered off or moved. 3. The robot is stuck by obstacles on the ground or the door of the room in which the station locates is closed. 4. The robot does not depart from the station to start a cleaning task. 5. The station is placed on an uneven ground.	1. Please refer to the guideline to put the station in a correct position. 2. Please check whether the station has connected to an available power supply. Do not move the station. 3. Please refer to the guideline to clean up objects on the ground before starting a cleaning task. 4. It is recommended to depart the robot from the station to start a cleaning task. 5. Please put the station on a flat ground.
Fail to complete mapping	1. Fail to complete automatic cleaning. 2. Fail to return to the station automatically. 3. Fail to reach any area at home.	1. During initial cleaning task, make sure that the mop has been installed properly and the environment is unobstructed. Do not manually end the cleaning task. 2. Please refer to the guideline to put the station in a correct position. 3. To facilitate robot mapping, please open the door of each room during first use.

PRODUCT SPECIFICATIONS

Product specifications

Robot		Station	
Dimensions: 35×35×10 cm		Dimensions: 44×44×45 cm	
Color: White		Color: White	
Weight: 3.95 kg		Weight: 7.6 kg	
Battery: 14.4V,6000mAh		Rated input: 100-240V ~ 50-60Hz	
Rated voltage: 24V DC		Rated output: 24V DC	
Rated power: 36 W		Rated power: 96 W	
Type of battery	Number of battery packs per package	Number of battery units in each battery string	The battery information
Rechargeable Li-ion battery	1pcs	8pcs	14.4Vdc,6000mAh,86.4Wh

Component name	Hazardous substance					
	Lead (Pb) and its compounds	Mercury (Hg) and its compounds	Cadmium (Cd) and its compounds	Hexavalent chromium (Cr (VI)) and its compounds	Polybrominated biphenyls (PBB)	Polybrominated diphenyl ethers (PBDE)
Plastic parts	○	○	○	○	○	○
Hardware	×	○	○	○	○	○
Circuit module	×	○	○	○	○	○
Electron components and parts	○	○	×	○	○	○
Battery	○	○	○	○	○	○
Plug cord (Metal parts)	×	○	○	○	○	○

Notice: This table is prepared in accordance with SJ/T11364.

O: Indicates that this hazardous substance contained in all of the homogeneous materials for this part is below the limit requirement in the current version of GB/T26572.

X: Indicates that this hazardous substance contained in at least one of the homogeneous materials for this part is above the limit requirement in the current version of GB/T26572, however, meets the environmental requirements of the EU ROHS directive. Beaware that there is no mature alternative in this industry.

This appliance is not intended for use by persons (including children) with reduced physical, sensory or mental capabilities, or lack of experience and knowledge, unless they have been given supervision or instruction concerning use of the appliance by a person responsible for their safety.
Children should be supervised to ensure that they do not play with the appliance.
This appliance can be used by children aged from 8 years and above and persons with reduced physical, sensory or mental capabilities or lack of experience and knowledge if they have been given supervision or instruction concerning use of the appliance in a safe way and understand the hazards involved.
Children shall not play with the appliance. Cleaning and user maintenance shall not be made by children without supervision.

FCC Compliance Statement

This device complies with part 15 of the FCC Rules. Operation is subject to the following two conditions: (1) This device may not cause harmful interference, and (2) this device must accept any interference received, including interference that may cause undesired operation.
Any changes or modifications not expressly approved by the party responsible for compliance could void the user's authority to operate the equipment.
This equipment has been tested and found to comply with the limits for a Class B digital device, pursuant to part 15 of the FCC Rules. These limits are designed to provide reasonable protection against harmful interference in a residential installation. This equipment generates, uses and can radiate radio frequency energy and, if not installed and used in accordance with the instructions, may cause harmful interference to radio communications. However, there is no guarantee that interference will not occur in a particular installation. If this equipment does cause harmful interference to radio or television reception, which can be determined by turning the equipment off and on, the user is encouraged to try to correct the interference by one or more of the following measures:
—Reorient or relocate the receiving antenna.
—Increase the separation between the equipment and receiver.
—Connect the equipment into an outlet on a circuit different from that to which the receiver is connected.
—Consult the dealer or an experienced radio/TV technician for help

FCC Radiation Exposure Statement

This equipment complies with FCC radiation exposure limits set forth for an uncontrolled environment . This equipment should be installed and operated with minimum distance 20cm between the radiator &you body. This transmitter must not be co-located or operating in conjunction with any other antenna or transmitter.

Environment friendly disposal

This marking indicates that this product should not be disposed with other household wastes throughout the EU. To prevent possible harm to the environment or human health from uncontrolled waste disposal, recycle it responsibly to promote the sustainable reuse of material resources. To return your used device, please use the return and collection systems or contact the retailer where the product was purchased. They can take this product for environmental safe recycling.

For indoor use only.

V1.0.0