WAINLUX

K8

UESER MANUAL

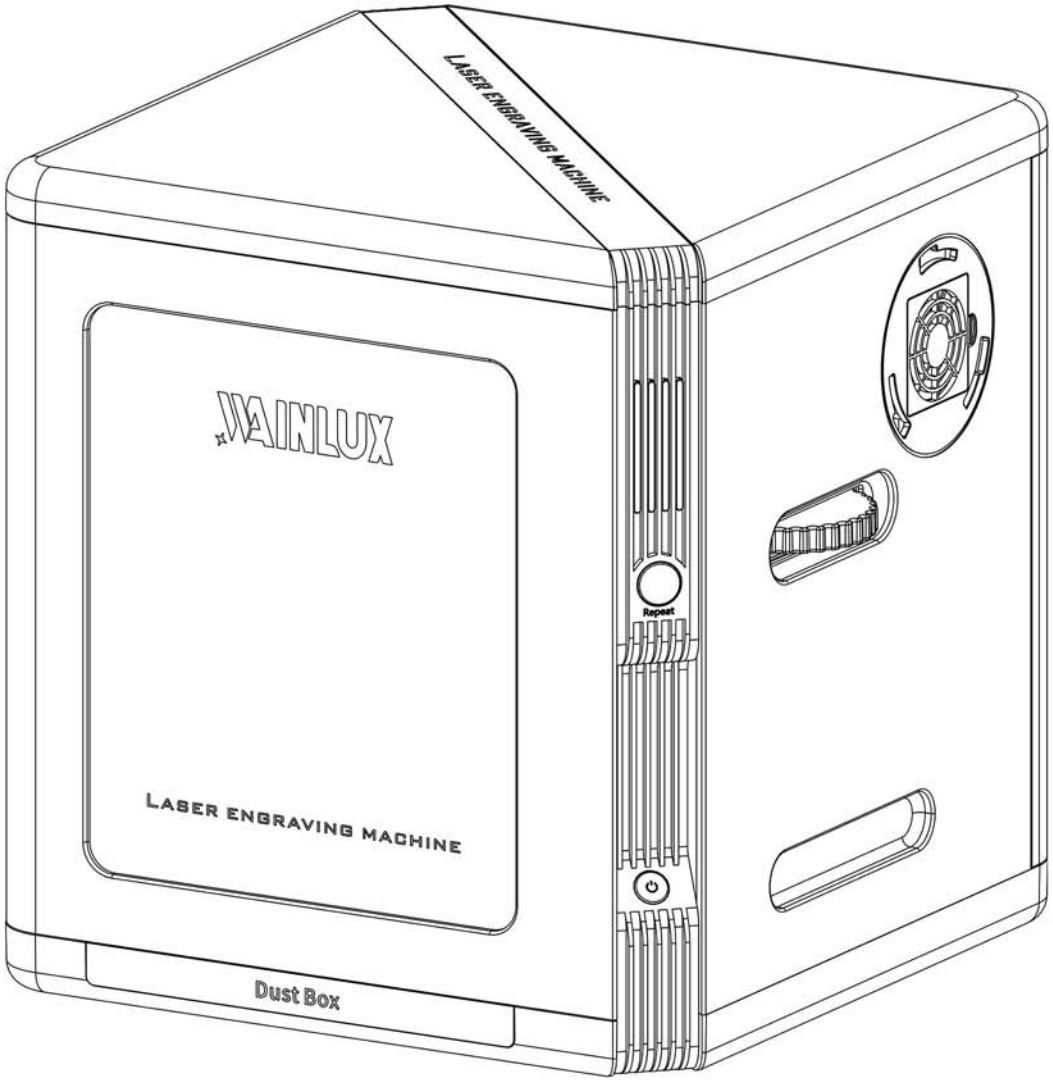

Please read the ueser manual carefully before use

Thank you for choosing WAINLUX laser engraver

Please read the user manual carefully before using and keep it for further reference.
For warranty and any technical support,kindly contact with our service team at:

team@wainlux.com
Or visit our website:
https://www.wainlux.com

Note:For a quicker response and assistance please send your order ID when contacting with us, thank you!

Safety Instructions

Thank you for purchasing WAIINLUX laser engraving machine. For a better use and maintain of this equipment, please read the manual carefully and follow the steps in the manual.

CAUTION

All risks caused by improper use or failure to follow the steps in the manual are borne by the individual. The final interpretation right of the manual belongs to the company, and has the right to modify all materials, data, technical details, etc. in this manual.

WARNNING

★Before operating the equipment, please read the user manual carefully and strictly abide by the operating procedures.

★Laser processing may have risks, users should carefully consider whether the object to be processed is suitable for laser operation.

★Processing objects and discharges should comply with local laws and regulations.

*This device uses Class IV lasers (intense laser radiation), which may cause the following conditions:

① Ignite the surrounding combustibles;

② During laser processing, other radiation and toxic and harmful gases may be produced due to different processing objects;

③ Direct irradiation of laser radiation will cause human injury. The place of use must be equipped with fire-fighting equipment. It is forbidden to pile up flammable and explosive materials on and around the workbench, and at the same time, it must be well ventilated.

*The environment where the equipment is located should be dry, free from pollution, vibration, strong electricity, strong magnetism and other interference and influence. The working environment temperature is 5-30℃, and the working environment humidity is 35-65%RH.

★Equipment working voltage: AC100-240V.

*The engraving machine and other associated equipment must be safely grounded before it can be turned on for operation.

★When the equipment is turned on, it needs to be on duty all the time. All power must be cut off before leaving to prevent abnormal situations. If any abnormal situation occurs, please cut off the power immediately!

*It is strictly forbidden to place any irrelevant total reflection or diffuse reflection objects in the device to prevent the laser from reflecting onto the human body or flammable objects.

*The device should be far away from electrical equipment sensitive to electromagnetic interference, which may cause electromagnetic interference.

* There is high voltage or other potential dangers inside the laser equipment, non-professionals are strictly forbidden to disassemble.

(V01-23030630)

Safety Instructions

Pay attention!

1.When the laser is turned on, it is prohibited to aim at humans, animals and flammables to avoid skin burns and fire.

2.The laser brightness is harmful to the eyes. Do not look directly at the laser.

3.Keep hands away from the machine during operation to avoid injury.

4.Turn off the machine when it is not in use to avoid misoperation.

Maintenance

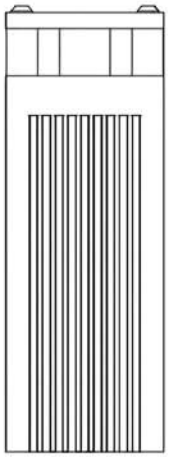

Laser module is consumable. It's recommended to keep the machine power off for 10 minutes after 4-hour engraving and keep the machine power off for 10 minutes after 1-hour cutting.

Contents

01 Product parameters 01

02 Products and accessories 02

03 Product structure and assembly 03

04 Product operation instructions 07

05 Software Connection 08

06 Software user instructions 11

07 Frequently Asked Questions 12

01 Product Parameters

Model	K8		
Material	ABS		
Laser Module	2.5W	5W	10W
Engraving speed	5000mm/min	12000mm/min	15000mm/min
One Pass	2mm Pine wood	5-7mm Pine wood	10mm Pine wood
One Pass	1mm Plywood	3-5mm Plywood	8mm Plywood
Power Supply	DC12V/4A	DC12V/4A	DC12V/5A
Output Power	<60W		
Laser wavelength	455nm		
Data Interface	WIFI, USB-Type C, support MAC &Windows		
Cooling method	Air cooling		
Laser class	Class 1		
Laser Service Time	>10000 hours		
Engraving Size	130*130mm		
Engraving Accuracy	0.01mm		
Engraving material	Paper, wood, plastic, leather, cloth, cardboard, leather, stone, ceramics, stainless steel, coated metals and other non-transparent materials		
Support Systerm	Windows/MAC/Android/IOS		
Image Format	JPEG/BMP/PNG/JPG/GIF/DXF/PLT/HPGL		
Product Size	272*272*294mm		
Package Size	323*323*395mm		

02 Products and Accessories

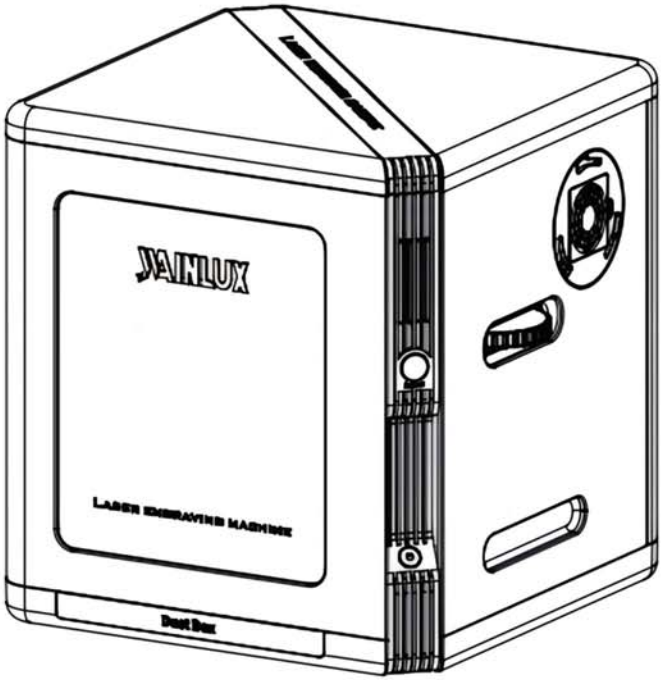

K8 Laser Engraver

【Optional Parts】

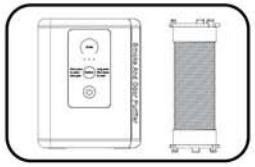

Air Purifier

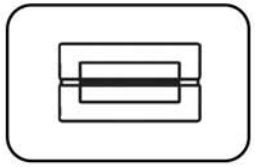

Rotary roller

【Standard Parts】

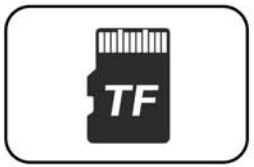

TF card

Card reader

Power supply

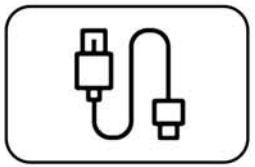

Type-C cable

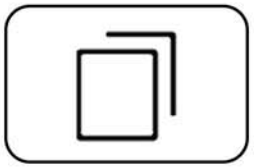

Kraft paper*2

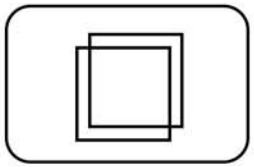

Wood board*2

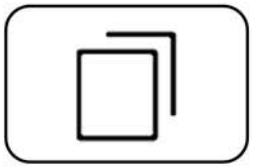

PVC*2

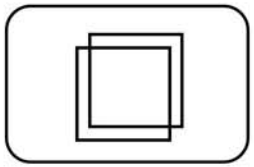

Leather*2

User manual

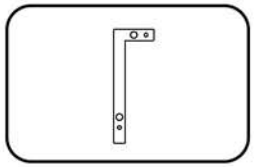

L-shaped locator

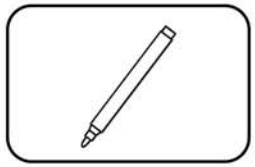

Maker pen

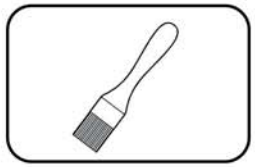

Brush

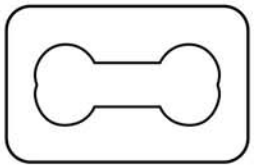

Dog tag

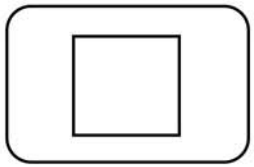

Cellophane

03 Product Structure and Assembly

Front View

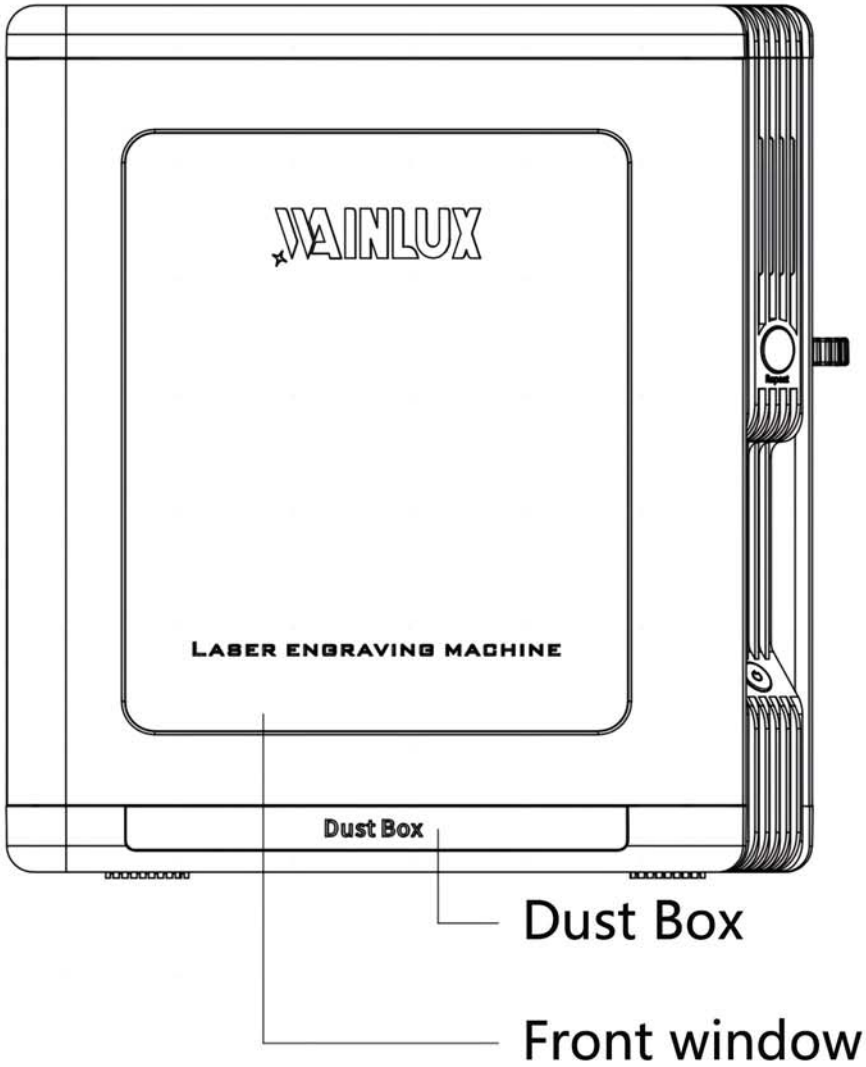

Rear View

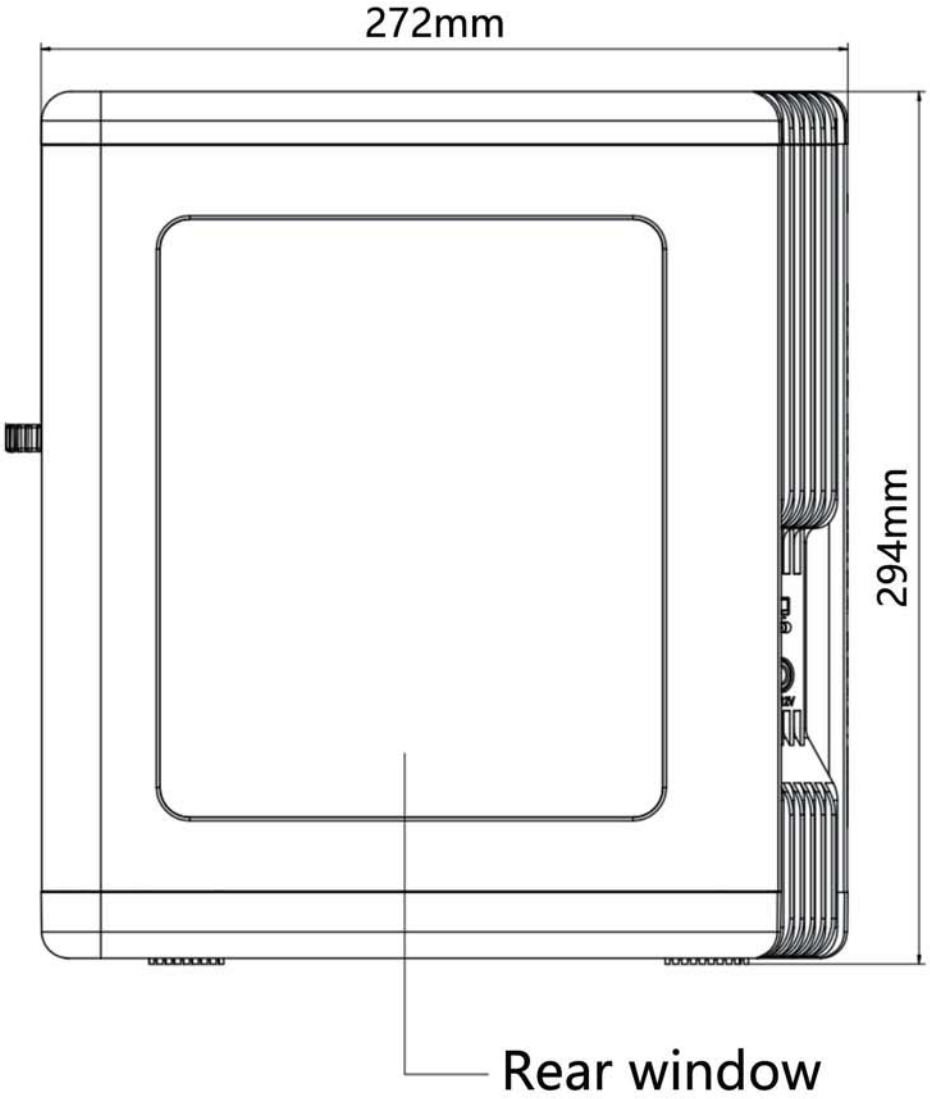

03 Product Structure and Assembly

Right view

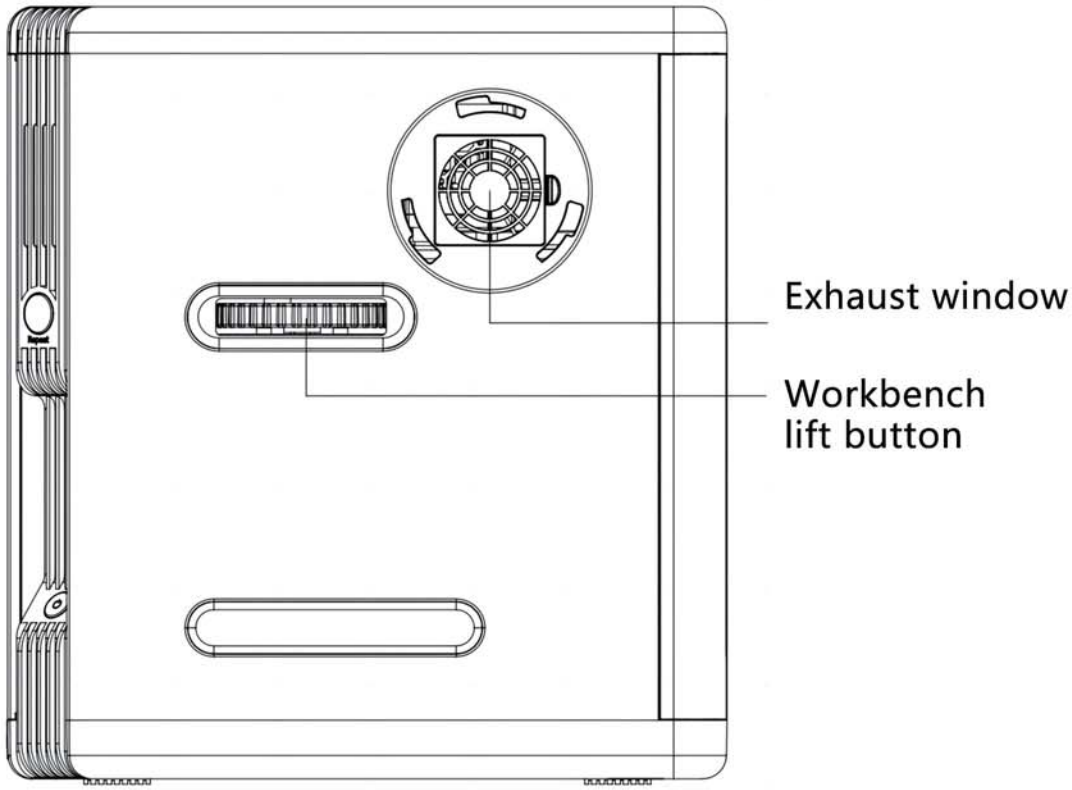

Top view

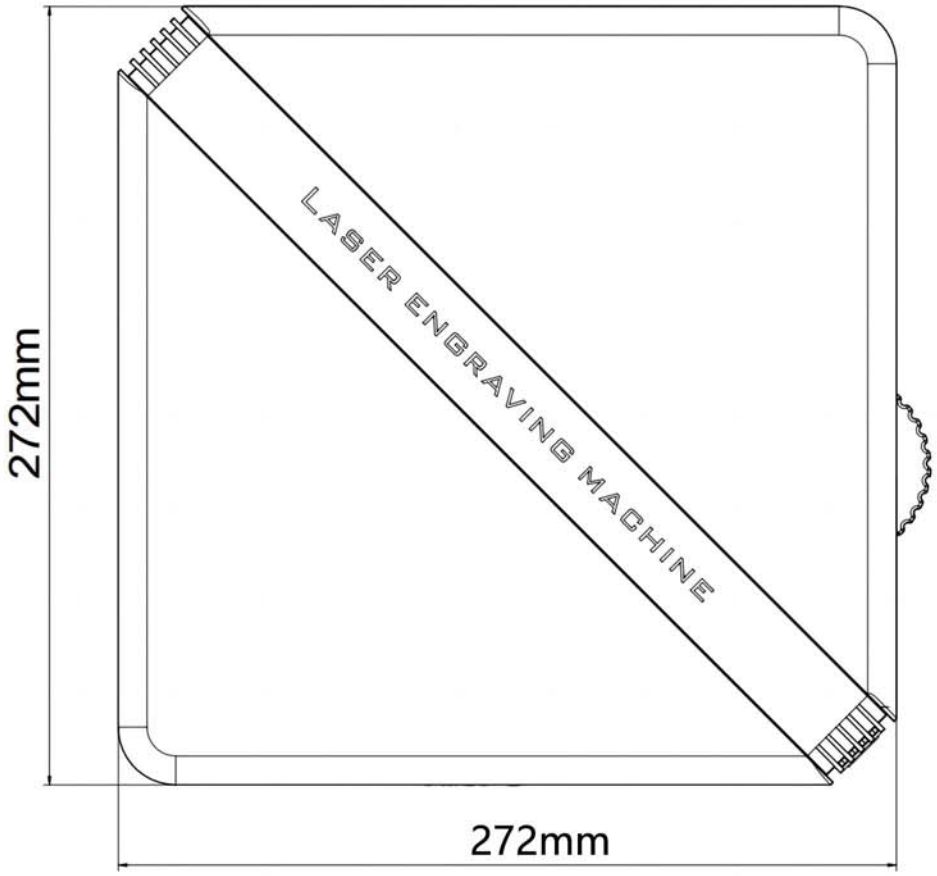

03 Product Structure and Assembly

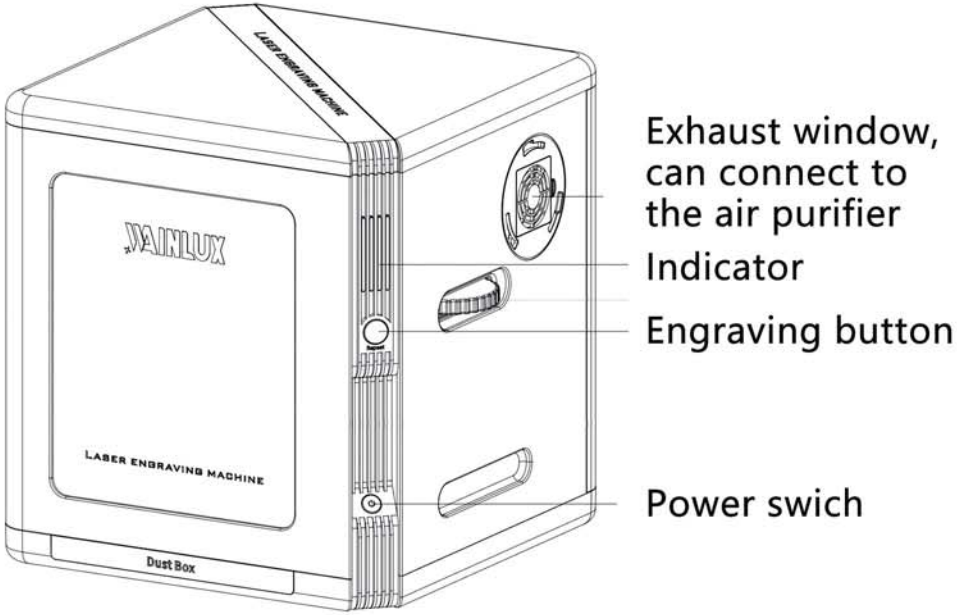

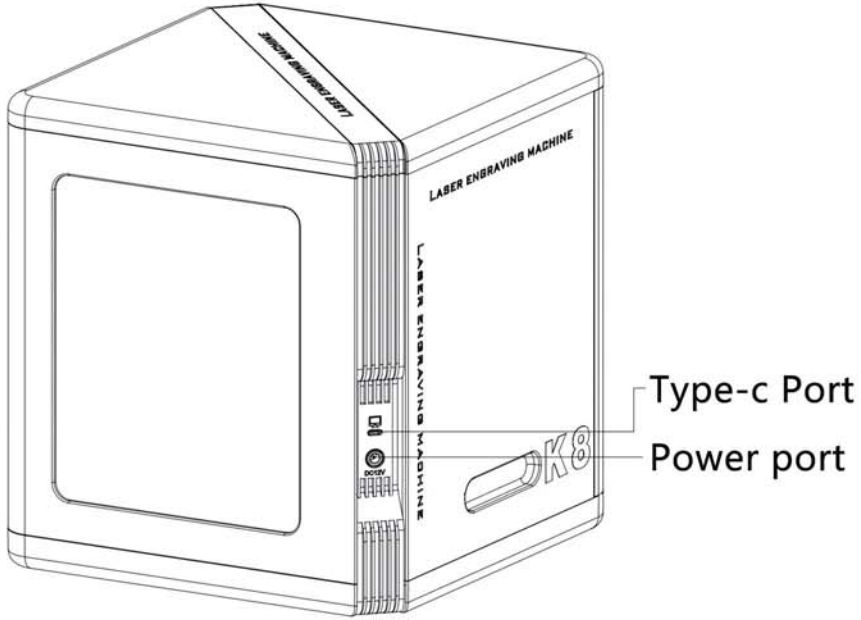

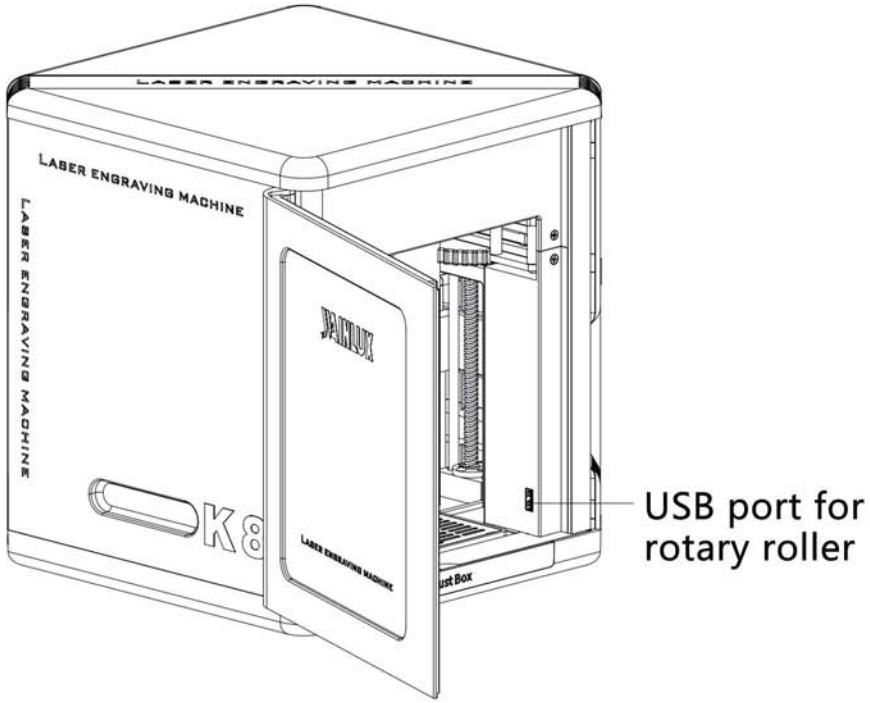

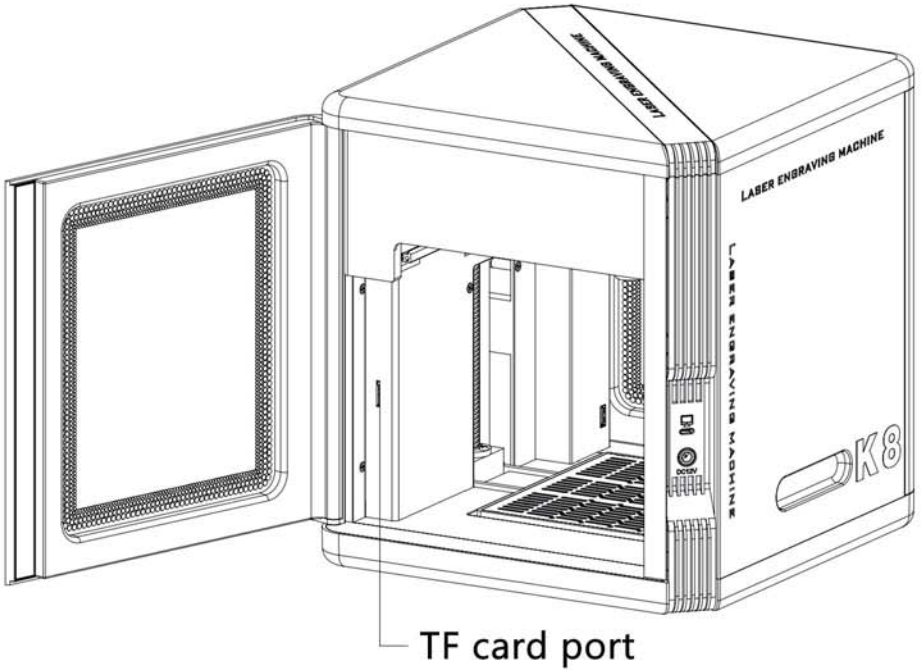

【Manual focus】

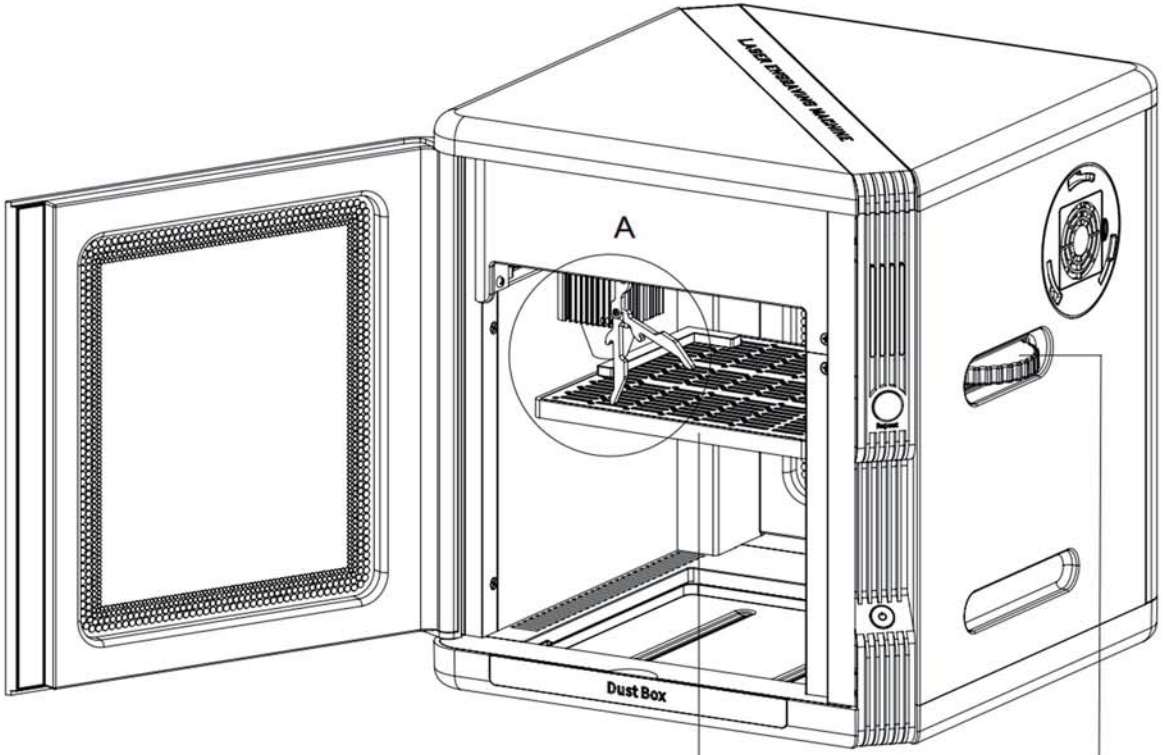

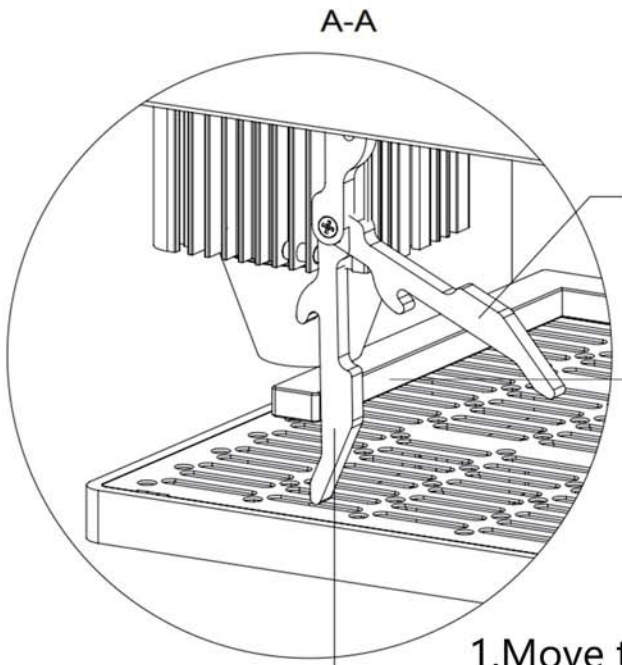

focus lever

1.Move the focus lever down

Workbench

2.Turn the knob,the workbench will rise or fall so that the engraved object matches the focus lever, and finally turn the focus lever back to its original position.

3.Adjust the position of the L-shaped locator to fix the position of the engraved object.

04 Product operation instructions

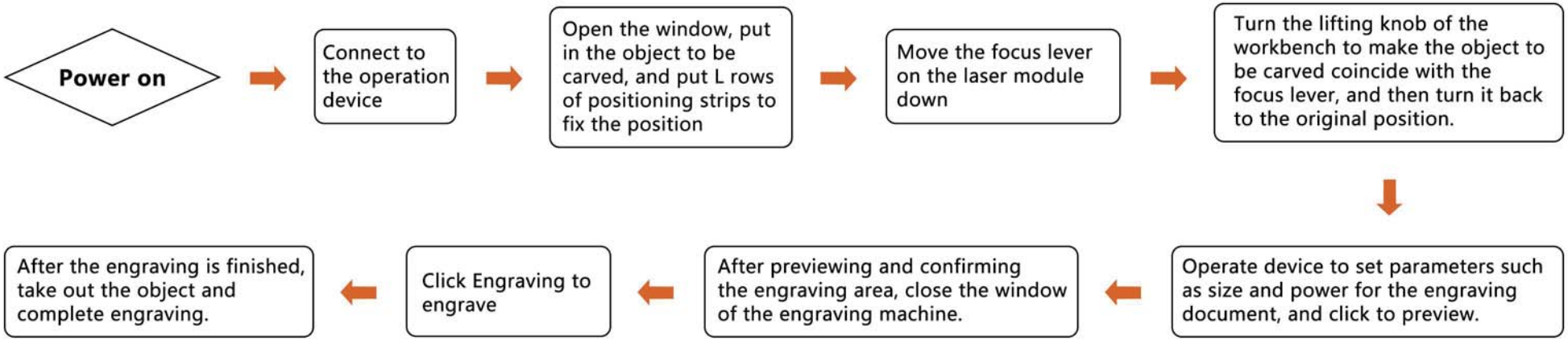

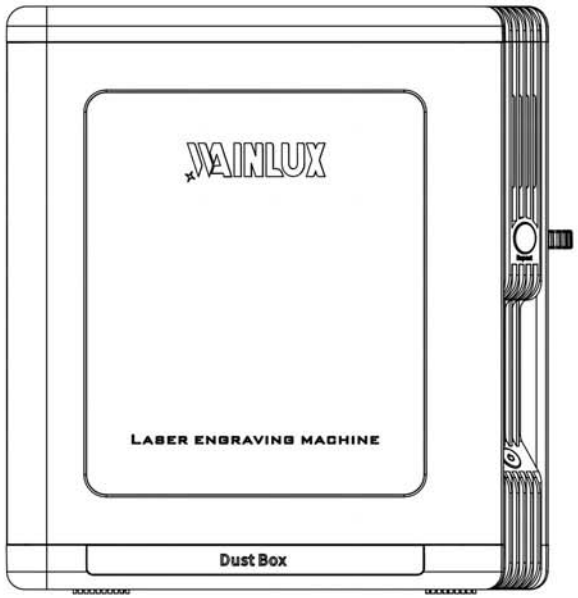

※ LED indicator status:

1. Standby: The white light of the indicator light is always on.
2. Working: The blue light of the indicator light is flashing.
3. Alarm: the white light of the indicator light flashes.

※ Engraving button tips:

1. Tap to preview, then tap to close the preview.
2. Press and hold for 3 seconds to start engraving,
   and then press and hold for 3 seconds to pause engraving.
3. Press and hold for 5 seconds to enter the roller mode.

※ Windows prompts:

Open the window to stop engraving,
close the window door to continue engraving.

Instructions for connecting the computer to the machine via USB

Power On → Connect the USB cable to the computer

↓

Open CutLabX software and enter Screening type → Click connection icon Connect

↓

Select USB and click connect button Connect → Connected is displayed, indicating that the connection is successful.

Instructions for using mobile phone to connect to the machine: AP mode

Note: AP mode is the default factory mode, when using the machine in this mode, the mobile phone will be in a state of no network.

Power On

→ Open the CutLabX APP settings page and search for wifi, connect to "GRBL_ESP", password: 12345678

↓

Open the CutLabX APP and enter Screening type

← Click connection icon Connect

↓

Enter the ip address 192.168.0.1 and click button Connect

→ Connected is displayed, indicating that the connection is successful.

Instructions for connecting the mobile phone to the machine: STA mode

(Configure the machine to connect to the home wifi network)

Power On

↓

Connect the USB cable to the computer

↓

Open CutLabX software and enter Screening type

↓

Click the connect Connect

↓

Select USB and click connect button Connect

↓

Click the "set wifi" button set wifi

↓

Select STA mode

↓

Enter the WIFI name and password of the home network (please be sure to enter correctly, pay attention to case sensitivity)

↓

Click the OK button OK

↓

Restart the machine and software

↓

Enter the set wifi page again, and record the displayed ip address

↓

Select STA mode

↓

Mobile phone connected to wifi

↓

Open CutLabX APP and enter Screening type

↓

Click on the connect Connect

↓

Enter the recorded ip address

↓

Click connect button Connect

↓

Connected is displayed, indicating that the connection is successful.

【Please read the software's in-line manual】

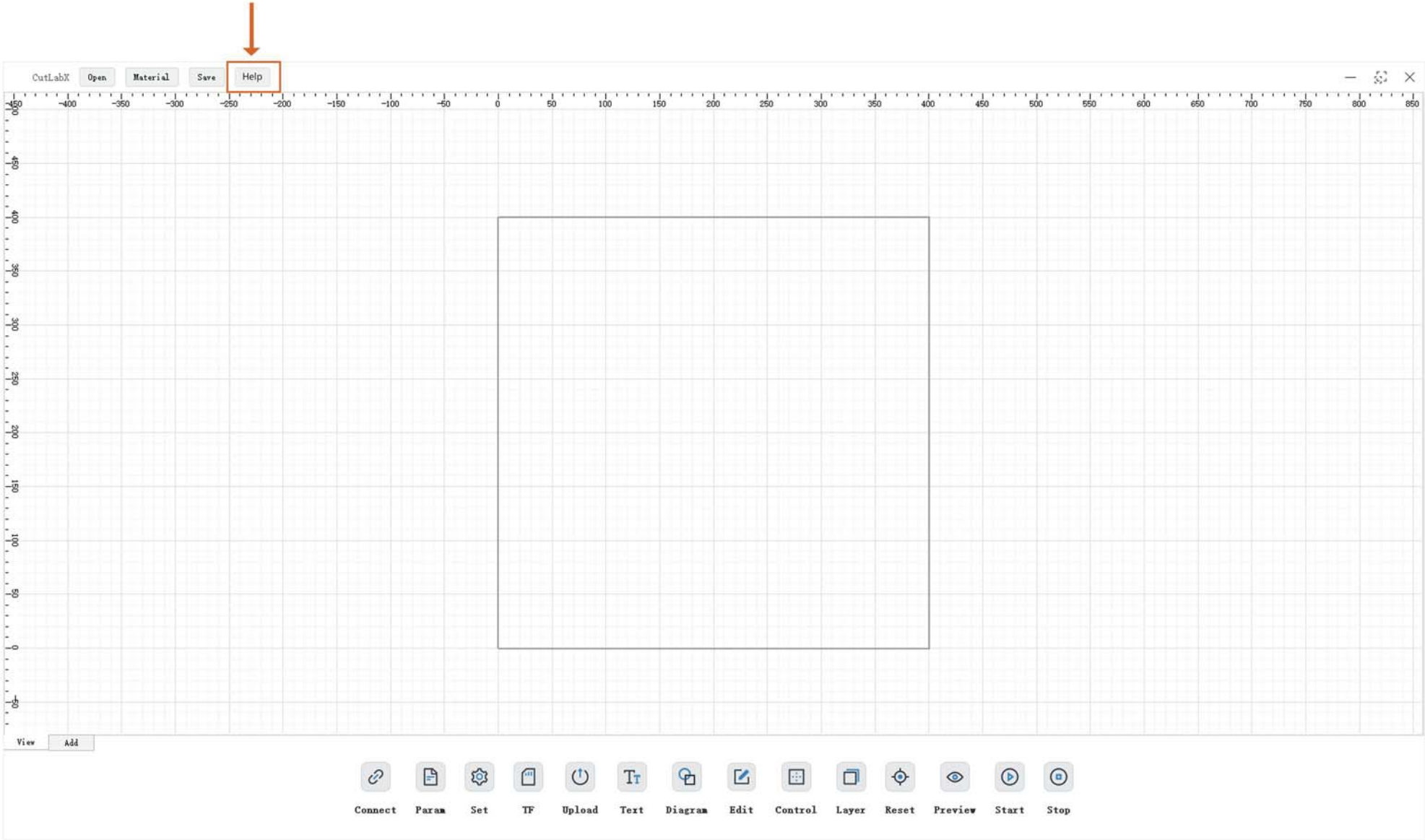

07 Frequently Asked Questions

FAQ	POSSIBLE CAUSES	SOLUTION
Machine Related Questions	How large format can the WAINLUX K8 laser engraving machine engrave?	130mm*130mm
	What type of laser source is the machine? What is the laser power?	Belongs to semiconductor lasers, the laser power is 2.5W, 5W, 10W 3 levels.
	What will happen if the machine is powered off during work?	When the power is cut off during the engraving task, the laser head will stay in place. When the power is turned on again, the machine will be initialized and will not continue to perform the original task.
	Why can't the pattern be engraved at all (or the engraving is very shallow)?	The imported picture should be clear, and the color should not be too light; make sure that the focus is normal before engraving, and the power, speed and times are set appropriately.
	What should I do if the pattern engraving is incomplete (or the depth is inconsistent)?	Please make sure that the object to be engraved is flat, observe the spirit level on the machine to ensure that the machine is in a level state, and has been adjusted normally according to the operation method of the user manual.
	How does WAINLUX K8 laser engraving machine focus?	Place the material on the stage, put down the fixed focus needle, and turn the right adjustment knob by hand (clockwise for up, counterclockwise for down). For example engraving or cutting 2mm thick basswood boards.

07 Frequently Asked Questions

FAQ	POSSIBLE CAUSES	SOLUTION
	Is the working platform damaged during laser engraving?	During engraving or cutting, the laser may penetrate the object and leave marks on the work surface. Be sure to place an object that the laser cannot penetrate under the engraved object, such as: stainless steel plate, aluminum alloy plate, etc.
	When engraving offline, why can' t engraving be started even after pressing the button on the control box?	Make sure there are engraving files in the root directory of the TF card, and the TF card is inserted. Notice: a. The machine reads the engraving file with the latest modification date in the root directory of the TF card by default. It is recommended to delete other irrelevant files in the root directory. b. The file can only be generated by LightBurn software, and the compatible format is gcode. If gc is generated by default, please manually modify the file suffix to gcode.
	Why does the machine not respond after being powered on?	a. Check whether the power plug at the machine end is inserted in place. b. Check the electrical status of the power socket. c. Check whether the power switch on the machine and the magnetic door are closed.

07 Frequently Asked Questions

FAQ	POSSIBLE CAUSES	SOLUTION
	Why can't the machine connect to the computer after it is powered on?	a. Reinstall the driver, the driver display has been installed, which means the driver is OK. When the driver display is pre-installed, you need to check whether it is the original wiring or not connected to the machine. Please use another port on the computer. b. Is the port selection correct? Some computers will have 2 ports when connected. Please ignore com1 and choose another com port. (The port number of MAC must start with Wchusbserial to work normally) c. Close other software that occupies the com port. When you use Lasergrbl to connect, you cannot connect when you open CutLabX. You need to close Lasergrbl to use it normally. Note: In Lightburn, the machine can store multiple machine information, please select the appropriate configuration information according to the model.
	Why can't I use the mobile phone after the machine is powered on?	a. Please use the mobile phone according to the manual. b. If the connection is abnormal due to the incompatibility of the newly released mobile phone or the upgraded system, please provide a screenshot of the mobile phone configuration and contact our customer service to get technical support as soon as possible.

FAQ	POSSIBLE CAUSES	SOLUTION
Engraving/ Cutting Related Questions	What non-transparent materials can Wailnux K8 laser engraving machine engrave or cut?	Engraving: cardboard, wood, bamboo, rubber, leather, fabric, acrylic, painted metal, plastic, etc.; Cutting: cardboard, wood, bamboo, cloth, leather, fabric, acrylic (cannot cut clear acrylic), plastic, etc.
	Can it be engraved on curved surface materials?	Yes, but the radian of the material and the engraved graphic area should not be too large, otherwise there will be slight deformation.
	Can it be engraved on reflective/transparent materials such as ceramics/glass?	Yes, but before engraving, it is necessary to coat the surface of the material with anti-reflective material (such as laser color paper, black marker pen), to ensure the engraving effect and prevent the reflected light from damaging the laser module.
	Why is there a big difference in the processing effect of materials with the same material but different colors using the same G-code file?	Materials of different colors have different optical properties, and the absorption and reflection of laser energy are different. It is recommended to set different power and speed in the software when engraving materials of the same material but different colors.
	There is a lot of smoke and dust on the material after cutting, how to deal with it?	Please reduce the laser power appropriately and increase the speed.

FAQ	POSSIBLE CAUSES	SOLUTION
	Why can't the material be cut through?	1. Make sure that the machine and engraving materials are parallel to the work surface; 2. Make sure that the protective lens of the laser module is clean; 3. Make sure to focus in the correct way; 4. Confirm the material thickness again, and set it according to the recommended parameters in the random data; 5. Gradually increase the number of cuts, or reduce the cutting speed appropriately.
Software Related Issues	What software does the Wailnux K8 laser engraving machine support?	LaserGRBL (Free) - Real time LightBurn (paid) - Real time/Offline 30-day trial CutLabX (Free) - Real time/Offline/Mobile When engraving in real time, pay attention to the computer not to freeze, and not to enter the standby state (do not lock the screen), so as not to affect the engraving.
	Where can I download these software?	LaserGRBL (https://lasergrbl.com/download/) LightBurn (https://lightburnsoftware.com/pages/trial-version-try-before-you-buy) CutLabX (download from the attached U disk)

07 Frequently Asked Questions

FAQ	POSSIBLE CAUSES	SOLUTION
	What image formats does the software support?	LaserGRBL (bmp/png/jpg/gif/svg) LightBurn (bmp/png/jpg/jpeg/gif/tif/tiff/tga/ai/pdf/sc/dxf/hpgl/plt/rd/svg) CutLabX (AI, PDF, SVG, DXF, PLT, PNG, JPG, GIF, BMP)
	Where can I get software-related tutorials?	LaserGRBL (https://lasergrbl.com/usage/) LightBurn (https://lightburnsoftware.github.io/NewDocs/) CutLabX (In the attached U disk)

WAINLUX

Laser engraving machine

Mail：team@wainlux.com
Website：https://www.wainlux.com

FCC Requirement

changes or modifications not expressly approved by the party responsible for compliance could void the user’ s authority to operate the equipment.

This device complies with Part 15 of the FCC Rules. Operation is subject to the following two conditions:

(1) this device may not cause harmful interference, and

(2) this device must accept any interference received, including interference that may cause undesired operation.

Note: This equipment has been tested and found to comply with the limits for a Class B digital device, pursuant to Part 15 of the FCC Rules. These limits are designed to provide reasonable protection against harmful interference in a residential installation. This equipment generates, uses, and can radiate radio frequency energy, and if not installed and used in accordance with the instructions, may cause harmful interference to radio communications. However, there is no guarantee that interference will not occur in a particular installation. If this equipment does cause harmful interference to radio or television reception, which can be determined by turning the equipment off and on, the user is encouraged to try to correct the interference by one or more of the following measures:

– Reorient or relocate the receiving antenna.

– Increase the separation between the equipment and receiver.

– Connect the equipment into an outlet on a circuit different from that to which the receiver is connected.

– Consult the dealer or an experienced radio/TV technician for help.

This equipment complies with FCC radiation exposure limits set forth for an uncontrolled
environment. This equipment should be installed and operated with a minimum distance of 20cm
between the radiator & your body. This transmitter must not be co-located or operating in
conjunction with any other antenna or transmitter.