intertek
Total Quality. Assured.

DOKE COMMUNICATION (HK) LIMITED

TEST REPORT

SCOPE OF WORK
FCC TESTING–BV6200 Plus

REPORT NUMBER
250219088SZN-004

ISSUE DATE	**[REVISED DATE]**
21 April 2025	[----------]

PAGES
24

DOCUMENT CONTROL NUMBER
FCC 15C_Tx_b
© 2017 INTERTEK

RF
TEST REPORT

Report No.	**: 250219088SZN-004**
Product	**: Smart phone**
Model No.	**: BV6200 Plus**
Brand Name	**: Blackview**
Sample ID	**: Z250219088-001**
FCC ID	**: 2A7DX-BV6200PLUS**

Applicant:	**DOKE COMMUNICATION (HK) LIMITED** **19H MAXGRAND PLAZA NO 3 TAI YAU STREET SAN PO KONG KL**
Test Method/ Standard:	**FCC Part 15 Subpart E;** **KDB 789033 D02 v02r01;** **KDB 662911 D01 v02r01;** **KDB 905462 D02 v02;** **ANSI C63.10-2013**
Test By:	**Intertek Testing Services Shenzhen Ltd. Longhua Branch** **101, 201, Building B, No. 308 Wuhe Avenue, Zhangkengjing Community, GuanHu Subdistrict, LongHua District, Shenzhen, P.R. China.**

Prepared and Checked by:

Tony Tang
Engineer

Approved by:

Johnny Wang
Project Engineer
Date: 21 April 2025

- The test results reported in this test report shall refer only to the sample actually tested and shall not refer or be deemed to refer to bulk from which such a sample may be said to have been obtained.
- This report is for the exclusive use of Intertek's Client and is provided pursuant to the agreement between Intertek and its Client. Intertek's responsibility and liability are limited to the terms and conditions of the agreement. Intertek assumes no liability to any party, other than to the Client in accordance with the agreement, for any loss, expense or damage occasioned by the use of this report. Only the Client is authorized to copy or distribute this report. Any use of the Intertek name or one of its marks for the sale or advertisement of the tested material, product or service must first be approved in writing by Intertek. The observations and test results referenced from this report are relevant only to the sample tested. This report by itself does not imply that the material, product, or service is or has ever been under an Intertek certification program.
- For Terms And Conditions of the services, it can be provided upon request.
- The evaluation data of the report will be kept for 3 years from the date of issuance.

Table of Contents

Summary of Tests **3**

1. General information **4**
1.1 Identification of the EUT 4
1.2 Additional information about the EUT 5
1.3 Antenna description (15.203) 5
1.4 Peripherals equipment 5

2. Test specifications **5**
2.1 Test standard 5
2.2 Operation mode 6
2.3 EUT Exercising Software 7

3. Maximum Output Power test (FCC 15.407) **8**
3.1 Operating environment 8
3.2 Test setup & procedure 8
3.3 Limit 8
3.4 Measured data of Maximum Output Power test results 8

4. Power Spectrum Density test (FCC 15.407) **9**
4.1 Operating environment 9
4.2 Test setup & procedure 9
4.3 Limit 9
4.4 Measured data of Power Spectrum Density test results 9

5. Minimum 6 dB RF Bandwidth (FCC 15.407) **10**
5.1 Operating environment 10
5.2 Test setup & procedure 10
5.3 Limit 10
5.4 Measured data of 6dB down Emission Bandwidth test results 11

6. Radiated Emission test (FCC 15.205 & 15.209 & 15.407) **12**
6.1 Operating environment 12
6.2 Test setup & procedure 12
6.3 Limit 14
6.4 Radiated spurious emission test data 16
6.4.1 Measurement results: frequencies equal to or less than 1 GHz 16
6.4.2 Measurement results: frequency above 1GHz 18

7. Power Line Conducted Emission test **20**
7.1 Operating environment 20
7.2 Test setup & procedure 20
7.3 Limit 20
7.4 Power Line Conducted Emission test data 21

8. Frequency Stability Test **23**
8.1 Test setup & procedure 23
8.2 Frequency Stability Test Data 23

Summary of Tests

FCC Parts	Test	Section	Results
15.203	Antenna Requirement	1.3	Pass
15.407 a (1)/(3)	Maximum output power test	3	Pass
15.407 a (1)/(3)	Power Spectrum Density test	4	Pass
15.407 e	6dB Bandwidth	5	Pass
15.407 b, 15.205, 15.209	Radiated spurious emission test	6	Pass
15.207	AC line conducted emission test	7	Pass
15.407 g	Frequency Stability	8	Pass
15.407 h	DFS: Channel Closing Transmission Time	9.3	Not Applicable
15.407 h	DFS: Channel Move Time	9.3	Not Applicable
15.407 h	DFS: Non-Occupancy Period	9.3	Not Applicable

1. General information

1.1 Identification of the EUT

Product:	Smart phone
Model No.:	BV6200 Plus
Type of Device:	Slave device
Nominal Channel Bandwidth:	802.11a/n-HT20(20MHz), 802.11n-HT40(40MHz), 802.11ac(20/40/80MHz)
Operating Frequency:	5150MHz~5250 MHz, 5725MHz~5850MHz
Channel Number:	4 channels for 5180 MHz ~ 5240 MHz (802.11 a/n20/ac-HT20); 2 channels for 5190 MHz ~ 5230 MHz (802.11 n40/ac-HT40); 1 channels for 5210 MHz (802.11ac-HT80); 5 channels for 5745 MHz ~ 5825 MHz (802.11a/n20/ac-HT20); 2 channels for 5755 MHz ~ 5795 MHz (802.11n40/ac-HT40); 1 channels for 5775 MHz (802.11ac-HT80);
Modulation:	802.11a: OFDM (BPSK, QPSK, 16QAM, 64QAM) 802.11n: OFDM (BPSK, QPSK, 16QAM, 64QAM) 802.11ac: OFDM (BPSK, QPSK, 16QAM, 64QAM, 256QAM)
Rated Power:	DC 3.85V from battery
Test Date(s):	19 February 2025 to 10 April 2025
Note 1:	This report is for the exclusive use of Intertek's Client and is provided pursuant to the agreement between Intertek and its Client. Intertek's responsibility and liability are limited to the terms and conditions of the agreement. Intertek assumes no liability to any party, other than to the Client in accordance with the agreement, for any loss, expense or damage occasioned by the use of this report. Only the Client is authorized to permit copying or distribution of this report and then only in its entirety. Any use of the Intertek name or one of its marks for the sale or advertisement of the tested material, product or service must first be approved in writing by Intertek. The observations and test results in this report are relevant only to the sample tested. This report by itself does not imply that the material, product, or service is or has ever been under an Intertek certification program.
Note 2:	When determining the test conclusion, the Measurement Uncertainty of test has been considered.

1.2 Additional information about the EUT

The equipment under test (EUT) is a Smart phone with Bluetooth 5.0 (dual-mode) function operating in 2402-2480MHz, 2.4G Wi-Fi function operating in 2412-2462MHz, 5G Wi-Fi function operating in 5150MHz~5250 MHz, 5725MHz~5850MHz, NFC function and GSM, WCDMA, LTE function. For more detail information pls. refer to the user manual.

For more detail features, please refer to User's description as file name “descri.pdf”.

Related Submittal(s) Grants
This is an application for certification of U–NII device (5GHz Wi-Fi transmitter portion).
For the BT EDR function was tested and demonstrated in report 250219088SZN-001.
For the BT BLE function was tested and demonstrated in report 250219088SZN-002.
For the 2.4GHz Wi-Fi function was tested and demonstrated in report 250219088SZN-003.
For the GSM, WCDMA, LTE function was tested and demonstrated in report 250219088SZN-005.
For the NFC function was tested and demonstrated in report 250219088SZN-006.

1.3 Antenna description (15.203)

The EUT uses Integral Antenna which in accordance to Section 15.203 is considered sufficient to comply with the provisions of this section.
Antenna Gain: 2.64dBi Max.

1.4 Peripherals equipment

Description	Manufacturer	Model No.
Adaptor (Provided by applicant)	N/A	Model: QZ-0180AAA00 Input: 100-240V~, 50/60Hz, 0.5A Output: 5.0V⎓3.0A, 9.0V⎓2.0A, 12.0V⎓1.5A
USB Cable (Provided by applicant)	N/A	Shielded, Length: 100cm

2. Test specifications

2.1 Test standard

The EUT was performed according to the procedures in FCC Part 15 E, Section15.203, 15.207, 15.209, 15.407 and ANSI C63.10/2013, method of measurement: KDB 789033.

The test of radiated measurements according to FCC Part15 Section 15.33(a) had been conducted and the field strength of this frequency band was all meet limit requirement, thus we evaluate the EUT pass the specified test.

The AC power conducted emissions was invested over the frequency range from 0.15 MHz to 30 MHz using a receiver bandwidth of 9 kHz (15.207 paragraph).

Radiated emissions were invested cover the frequency range from 9KHz to 30MHz using a receiver RBW of 9kHz, from 30 MHz to 1000 MHz using a receiver RBW of 120 kHz record QP reading, and the frequency over 1 GHz using a spectrum analyzer RBW of 1 MHz, VBW of 3MHz, Detector=Peak record for Peak reading, RBW of 1 MHz, VBW of 3MHz, Detector=RMS record for Average reading recorded on the report.

The EUT setup configurations please refer to the photo of radiated setup photos.pdf & conducted setup photos.pdf.

2.2 Operation mode

The EUT was supplied by and it was run in TX mode that was controlled by client provided RF testing program.

The EUT was transmitted continuously during the test. The worst case test result was showed in the report.

With individual verifying, the maximum output power was found at 6 Mbps data rate for 802.11a mode, 6.5 Mbps data rate for 802.11n-HT20/ac-HT20 mode, 13.5 Mbps data rate for 802.11n-HT40/ac-HT40 mode, 29.3 Mbps data rate for 802.11ac-HT80 mode. The final tests were executed under these conditions and recorded in this report individually.

2.3 EUT Exercising Software

The EUT exercise program (provided by client) used during radiated and conducted testing was designed to exercise the various system components in a manner similar to a typical use. The worst case configuration is used in all specified testing.

Table for Parameters of Test Software Setting
During testing, Channel & Power Controlling Software provided by the customer was used to control the operating channel as well as the output power level. The RF output power selection is for the setting of RF output power expected by the customer and is going to be fixed on the firmware of the final end product.

Testing Software: Nonsignaling operation platform

2.4 Special Accessories

N/A

3. Maximum Output Power test (FCC 15.407)

3.1 Operating environment

Temperature: 25 ℃
Relative Humidity: 55 %
Atmospheric Pressure: 1011 hPa

3.2 Test setup & procedure

The power output per FCC §15.407(a) was measured on the EUT using a 50 ohm SMA cable connected to Power Meter and the measurement method refer to 789033 D02. Power was read directly and cable loss correction (0.5dB) was added to the reading to obtain power at the EUT antenna terminals.

3.3 Limit

Operating Frequency (MHz)	Max Conducted TX Power	Max EIRP
5150~5250	30dBm (1W) for master device	4W (36dBm) with 6dBi antenna
	24dBm (250mW) for client device	
5250~5350	24dBm (250mW) or 11dBm+ 10logB*	1W (30dBm) with 6dBi antenna
5470~5725	24dBm (250mW) or 11dBm+ 10logB*	
5725~5850	30dBm (1W)	4W (36dBm) with 6dBi antenna

Remark:
1) *Where B is the 26dB emission Bandwidth in MHz.
2) The device was declared as Slave device.
3) Tx Power Reduction (dBm-by-dBi) required when antenna exceeds 6dBi.

3.4 Measured data of Maximum Output Power test results

Max Conducted TX Power

The more detail please refer to Appendix B1 of “250219088SZN-004_Appendix”.

Max EIRP

The more detail please refer to Appendix B2 of “250219088SZN-004_Appendix”.

4. Power Spectrum Density test (FCC 15.407)

4.1 Operating environment

Temperature:	25	℃
Relative Humidity:	50	%
Atmospheric Pressure:	1013	hPa

4.2 Test setup & procedure

Method of Measurement:

The power spectrum density per FCC §15.407(a) was measured from the antenna port of the EUT using a 50 ohm spectrum analyzer with the resolution bandwidth set at 1MHz/500KHz, the video bandwidth set at 3 MHz/2MHz (measurement method refer to KDB 789033 D02). Power spectrum density was read directly and cable loss reading to obtain power at the EUT antenna terminals.

4.3 Limit

Operating Frequency (MHz)	Max Conducted Power Spectral Density
5150~5250	*17dBm/MHz for master device
	11dBm/MHz for mobile/portable client device
5250~5350	11dBm/MHz
5470~5725	11dBm/MHz
5725~5850	30dBm/500KHz

Remark: 1) The device was declared as Slave device.
2) Tx Power Reduction (dBm-by-dBi) required when antenna exceeds 6dBi.

4.4 Measured data of Power Spectrum Density test results

The more detail please refer to “Appendix of 250219088SZN-004” Appendix C.

5. Minimum 6 dB RF Bandwidth (FCC 15.407)

5.1 Operating environment

Temperature:	25	℃
Relative Humidity:	50	%
Atmospheric Pressure:	1011	hPa

5.2 Test setup & procedure

The Minimum 6 dB RF Bandwidth per 789033 D02 was measured from the antenna port of the EUT using a 50 ohm spectrum analyzer with the resolution bandwidth set at 100KHz, and set the video bandwidth (VBW) ≥ 3 x RBW. For each RF output channel investigated, the spectrum analyzer center frequency was set to the channel carrier. A PEAK output reading was taken, a DISPLAY line was drawn 6 dB lower than PEAK level. The 6dB bandwidth was determined from where the channel output spectrum intersected the display line.

For 26dB down Emission Bandwidth

The 26dB down Emission Bandwidth per 789033 D02 was measured from the antenna port of the EUT using a 50 ohm spectrum analyzer with the resolution bandwidth set RBW = approximately 1% of the emission bandwidth. Set the VBW > RBW, Detector = Peak, Trace mode = max hold (Measure the maximum width of the emission that is 26 dB down from the maximum of the emission. Compare this with the RBW setting of the analyzer. Readjust RBW and repeat measurement as needed until the RBW/EBW ratio is approximately 1%).

For 99% Occupied Bandwidth

The 99% Occupied Bandwidth per 789033 D02 was measured from the antenna port of the EUT using a 50 ohm spectrum analyzer with the resolution bandwidth set center frequency to the nominal EUT channel center frequency, set span = 1.5 times to 5.0 times the OBW, set RBW = 1 % to 5 % of the OBW, set VBW ≥ 3x RBW, The 99% occupied bandwidth was determined from where the channel output spectrum intersected the display line.

5.3 Limit

Operating Frequency (MHz)	Minimum 6 dB RF Bandwidth Limit
5150~5250	N/A
5250~5350	N/A
5470~5725	N/A
5725~ 5850	≥500KHz

5.4 Measured data of 6dB down Emission Bandwidth test results

The more detail please refer to “Appendix of 250219088SZN-004” Appendix A3.

Note: 99% Occupied Bandwidth within the U-NII-1 band and 26dB Emission Bandwidth for reference. The more detail please refer to “Appendix of 250219088SZN-004” Appendix A2 and Appendix A1.

6. Radiated Emission test (FCC 15.205 & 15.209 & 15.407)

6.1 Operating environment

Temperature:	21.9	℃
Relative Humidity:	43	%
Atmospheric Pressure	1011	hPa

6.2 Test setup & procedure

The Diagram below shows the test setup, which is utilized to make these measurements.

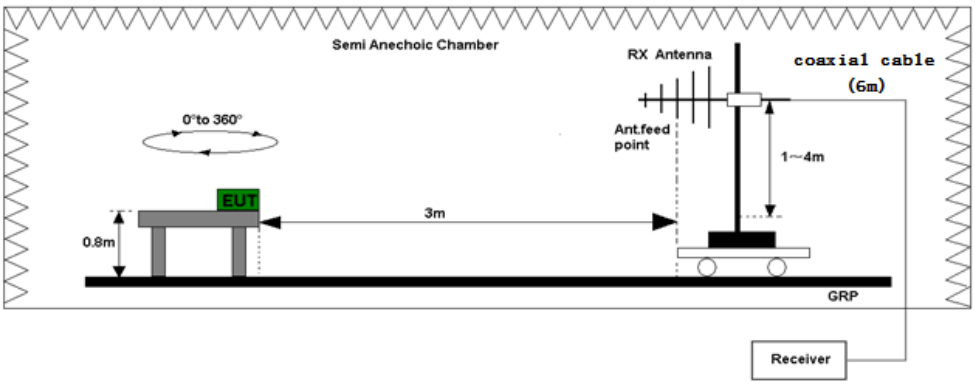

Test set-up of radiated disturbance (Up to 1GHz)

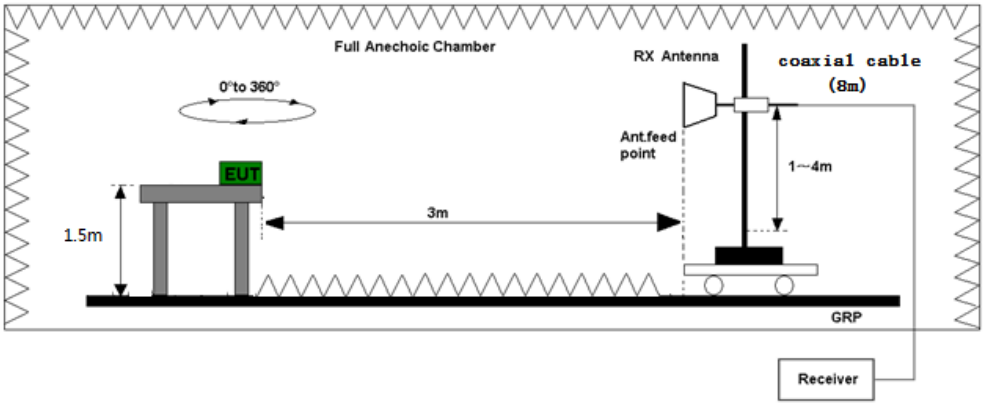

Test set-up of radiated disturbance (Above 1GHz)

Radiated emission measurements were performed from 9KHz to tenth harmonic or 40GHz.

The EUT for testing is arranged on a styrene turntable with the height of 0.8m up to 1GHz and 1.5m above 1GHz. If some peripherals apply to the EUT, the peripherals will be connected to EUT and the whole system. During the test, all cables were arranged to produce worst-case emissions. The signal is maximized through rotation. The height of antenna and polarization is changing constantly for exploring for maximum signal level. The height of antenna can be up to 4 meters and down to 1 meter.

The measurement for radiated emission will be done at the distance of three meters unless the signal level is too low to measure at that distance. In the case of the reading under noise floor, a pre-amplifier is used and/or the test is conducted at a closer distance. And then all readings are extrapolated back to the equivalent three meter reading using inverse scaling with distance.

Testing settings (refer to KDB 789033 D02)
Peak Measurements below 1GHz
1, Analyzer center frequency was set to the frequency of the radiated spurious emission.
2, Span=encompass the entire emission
3, RBW=120KHz
4, Detector=Quasi-Peak
5, Trace was allowed to stabilize

Peak Measurements above 1GHz
1, Analyzer center frequency was set to the frequency of the radiated spurious emission.
2, Span=encompass the entire emission
3, RBW=1MHz
4, VBW=3MHz
4, Detector= Peak (Max-hold)
5, Trace was allowed to stabilize

Average Measurements above 1GHz
1, Analyzer center frequency was set to the frequency of the radiated spurious emission.
2, Span=encompass the entire emission
3, RBW=1MHz
4, VBW=3MHz
4, Detector= RMS (Max-hold)
5, Trace was allowed to stabilize

6.3 Limit

The spurious Emission shall test through the 10th harmonic or 40GHz (whichever is lower). In addition, radiated emissions which fall in the restricted bands, as defined in §15.205(a), must also comply with the radiated emission limits specified in §15.209(a).

Notes:

1, All emission out-side of the 5.15-5.35GHz band shall not exceed an EIRP of -27dBm/MHz (68.2dBuV/m, test distance: 3 meter), For the band 5.725-5.85GHz, all emissions shall be limited to a level of −27 dBm/MHz at 75 MHz or more above or below the band edge increasing linearly to 10 dBm/MHz at 25 MHz above or below the band edge, and from 25 MHz above or below the band edge increasing linearly to a level of 15.6 dBm/MHz at 5 MHz above or below the band edge, and from 5 MHz above or below the band edge increasing linearly to a level of 27 dBm/MHz at the band edge.

2, The spectrum is measured from 9KHz to the 10th harmonic of the fundamental frequency of the transmitter using QP detector below 1GHz, above 1GHz, average & peak measurements were taken using for test. The worst-case emission are reported however emission whose levels were not within 20dB of the respective limited were not reported.

3, The test was performed on EUT under 802.11a/n-HT20/n-HT40/ac-HT20/HT40/HT80 continuously transmitting mode. Simultaneous transmitting was considered during the testing. All mode had been tested, but only the worst-case is recorded in the following graph and table.

6.3.1 Field Strength Calculation

The field strength is calculated by adding the reading on the Spectrum Analyzer to the factors associated with preamplifiers (if any), antennas, cables, pulse desensitization and average factors (when specified limit is in average and measurements are made with peak detectors). A sample calculation is included below.

FS = RA + AF + CF - AG + PD

Where FS = Field Strength in dBμV/m
RA = Receiver Amplitude (including preamplifier) in dBμV
CF = Cable Attenuation Factor in dB
AF = Antenna Factor in dB
AG = Amplifier Gain in dB
PD = Pulse Desensitization in dB

In the radiated emission table which follows, the reading shown on the data table may reflect the preamplifier gain. An example of the calculations, where the reading does not reflect the preamplifier gain, follows:

FS = RA + AF + CF - AG + PD

Example

Assume a receiver reading of 62.0 dBμV is obtained. The antenna factor of 7.4 dB and cable factor of 1.6 dB is added. The amplifier gain of 29 dB is subtracted. The pulse desensitization factor of the spectrum analyzer was 0 dB. The net field strength for comparison to the appropriate emission limit is 32 dBμV/m. This value in dBμV/m was converted to its corresponding level in μV/m.

RA = 62.0 dBμV
AF = 7.4 dB
CF = 1.6 dB
AG = 29.0 dB
PD = 0 dB
FS = 62 + 7.4 + 1.6 - 29 + 0 = 42 dBμV/m

Level in mV/m = Common Antilogarithm [(42 dBμV/m)/20] = 125.9 μV/m

6.4 Radiated spurious emission test data

6.4.1 Measurement results: frequencies equal to or less than 1 GHz

Applicant: DOKE COMMUNICATION (HK) LIMITED
Date of Test: 20 March 2025 Model: BV6200 Plus
Worst Case Operating Mode: Transmit (5190MHz)

Radiated Emissions

ANT Polarity: Horizontal

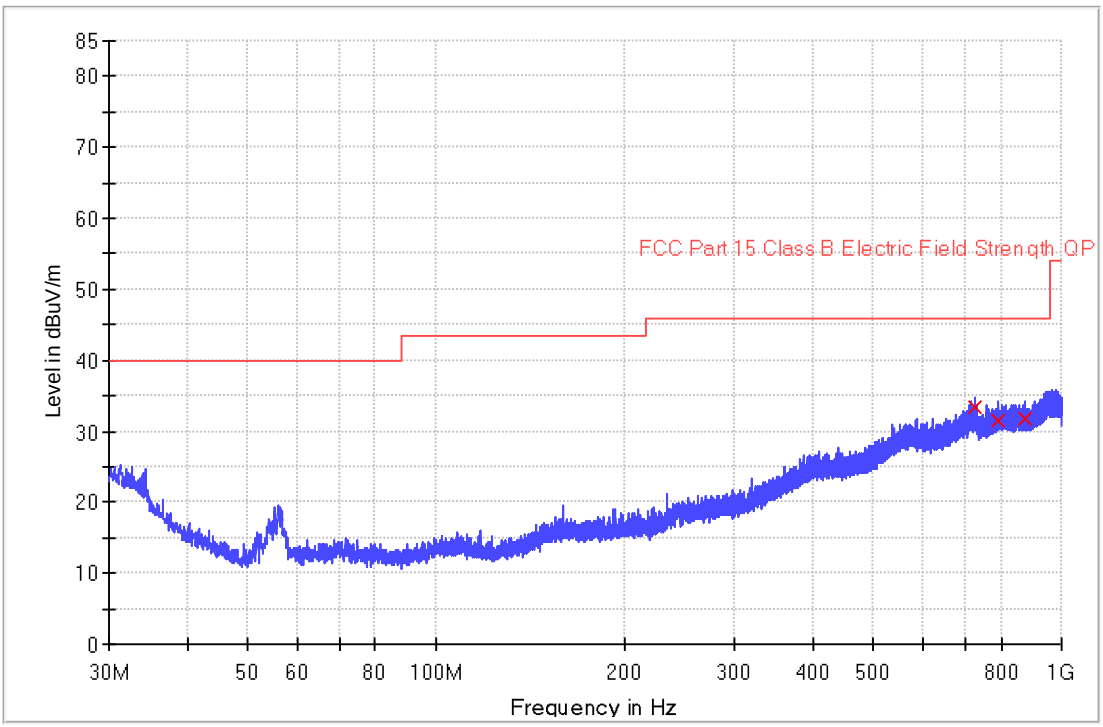

Limit and Margin

Frequency (MHz)	Quasi Peak (dBµV/m)	Meas. Time (ms)	Bandwidth (kHz)	Polarization	Corr. (dB/m)	Margin - QPK (dB)	Limit - QPK (dBµV/m)
729.531667	33.4	1000.0	120.000	H	31.0	12.6	46.0
790.480000	31.5	1000.0	120.000	H	32.0	14.5	46.0
871.572000	31.8	1000.0	120.000	H	31.8	14.2	46.0

NOTES:

1. Quasi-Peak detectors are used for frequency below 1GHz.
2. All measurements were made at 3 meters. Harmonic emissions not detected at the 3-meter distances were measured at 0.3-meter and an inverse proportional extrapolation was performed to compare the signal level to the 3-meter limit. No other harmonic emissions than those reported were detected at a test distance of 0.3-meter.
3. Negative value in the margin column shows emission below limit.
4. All emissions are below the QP limit.

Applicant: DOKE COMMUNICATION (HK) LIMITED
Date of Test: 20 March 2025 Model: BV6200 Plus
Worst Case Operating Mode: Transmit (5190MHz)

Radiated Emissions

ANT Polarity: Vertical

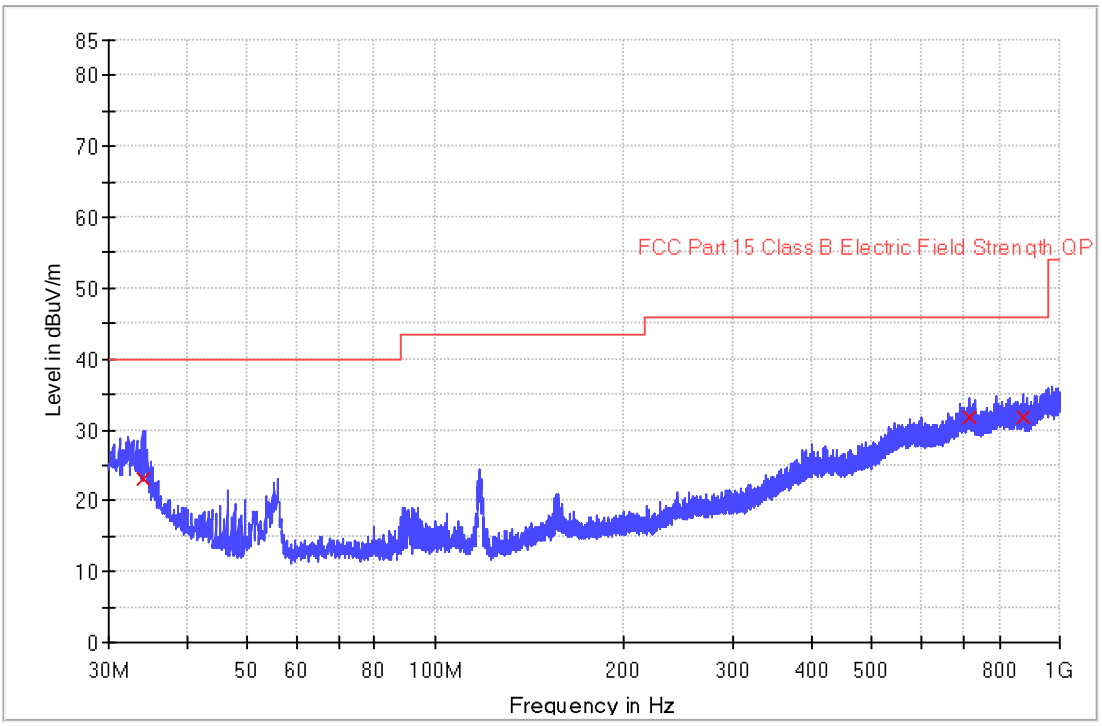

Limit and Margin

Frequency (MHz)	Quasi Peak (dBµV/m)	Meas. Time (ms)	Bandwidth (kHz)	Polarization	Corr. (dB/m)	Margin - QPK (dB)	Limit - QPK (dBµV/m)
33.977000	23.0	1000.0	120.000	V	20.5	17.0	40.0
715.046333	31.7	1000.0	120.000	V	31.0	14.3	46.0
872.833000	31.6	1000.0	120.000	V	31.8	14.4	46.0

NOTES:

1. Quasi-Peak detectors are used for frequency below 1GHz.
2. All measurements were made at 3 meters. Harmonic emissions not detected at the 3-meter distances were measured at 0.3-meter and an inverse proportional extrapolation was performed to compare the signal level to the 3-meter limit. No other harmonic emissions than those reported were detected at a test distance of 0.3-meter.
3. Negative value in the margin column shows emission below limit.
4. All emissions are below the QP limit.

6.4.2 Measurement results: frequency above 1GHz

The worst case occurred at 802.11n-HT40

Channel 38

Polarization	Frequency (MHz)	Reading (dBµV)	Pre-Amp Gain (dB)	Antenna Factor (dB)	Net at 3m (dBµV/m)	Peak Limit at 3m (dBµV/m)	Margin (dB)
Horizontal	10380.000	48.6	36.3	38.9	51.2	68.2	-17.0
Horizontal	15570.000	40.5	34.7	41.0	46.8	68.2	-21.4
Horizontal	5150.000	62.1	33.5	32.9	61.5	68.2	-6.7

Polarization	Frequency (MHz)	Reading (dBµV)	Pre-Amp Gain (dB)	Antenna Factor (dB)	Net at 3m (dBµV/m)	Average Limit at 3m (dBµV/m)	Margin (dB)
Horizontal	10380.000	43.6	36.3	38.9	46.2	54.0	-7.8
Horizontal	15570.000	37.3	34.7	41.0	43.6	54.0	-10.4
Horizontal	5150.000	46.2	33.5	32.9	45.6	54.0	-8.4

Channel 46

Polarization	Frequency (MHz)	Reading (dBµV)	Pre-Amp Gain (dB)	Antenna Factor (dB)	Net at 3m (dBµV/m)	Peak Limit at 3m (dBµV/m)	Margin (dB)
Horizontal	10460.000	46.1	36.3	38.9	48.7	68.2	-19.5
Horizontal	15690.000	44.4	34.7	41.0	50.7	68.2	-17.5
Horizontal	5350.000	50.9	33.4	33.2	50.7	68.2	-17.5

Polarization	Frequency (MHz)	Reading (dBµV)	Pre-Amp Gain (dB)	Antenna Factor (dB)	Net at 3m (dBµV/m)	Average Limit at 3m (dBµV/m)	Margin (dB)
Horizontal	10460.000	42.2	36.3	38.9	44.8	54.0	-9.2
Horizontal	15690.000	39.3	34.7	41.0	45.6	54.0	-8.4
Horizontal	5350.000	42.2	33.4	33.2	42.0	54.0	-12.0

Channel 151

Polarization	Frequency (MHz)	Reading (dBµV)	Pre-Amp Gain (dB)	Antenna Factor (dB)	Net at 3m (dBµV/m)	Peak Limit at 3m (dBµV/m)	Margin (dB)
Horizontal	11510.000	46.4	36.3	39.0	49.1	68.2	-19.1
Horizontal	17265.000	45.1	34.7	41.2	51.6	68.2	-16.6
Horizontal	5725.000	66.3	33.9	32.9	65.3	122.2	-56.9

Polarization	Frequency (MHz)	Reading (dBµV)	Pre-Amp Gain (dB)	Antenna Factor (dB)	Net at 3m (dBµV/m)	Average Limit at 3m (dBµV/m)	Margin (dB)
Horizontal	11510.000	40.8	36.3	39.0	43.5	54.0	-10.5
Horizontal	17265.000	40.4	34.7	41.2	46.9	54.0	-7.1

Channel 159

Polarization	Frequency (MHz)	Reading (dBµV)	Pre-Amp Gain (dB)	Antenna Factor (dB)	Net at 3m (dBµV/m)	Peak Limit at 3m (dBµV/m)	Margin (dB)
Horizontal	11590.000	46.5	36.3	39.0	49.2	68.2	-19.0
Horizontal	17385.000	44.8	34.7	41.2	51.3	68.2	-16.9
Horizontal	5850.000	53.1	33.4	34.5	54.2	122.2	-68.0

Polarization	Frequency (MHz)	Reading (dBµV)	Pre-Amp Gain (dB)	Antenna Factor (dB)	Net at 3m (dBµV/m)	Average Limit at 3m (dBµV/m)	Margin (dB)
Horizontal	11590.000	40.9	36.3	39.0	43.6	54.0	-10.4
Horizontal	17385.000	38.3	34.7	41.2	44.8	54.0	-9.2

* Emission within the restricted band meets the requirement of section 15.205. The corresponding limit as per 15.209 is based on Quasi peak limit for frequencies below 1000 MHz and average limit for frequencies over 1000 MHz. The radio frequency emissions above 1GHz also meet the corresponding 20dB permitted peak limit with a peak detector function. All unwanted emissions outside of the 5.15-5.35GHz & 5725-5850 bands are complied with the limit.

7. Power Line Conducted Emission test

7.1 Operating environment

Temperature:	21.9	℃
Relative Humidity:	43	%
Atmospheric Pressure	1011	hPa

7.2 Test setup & procedure

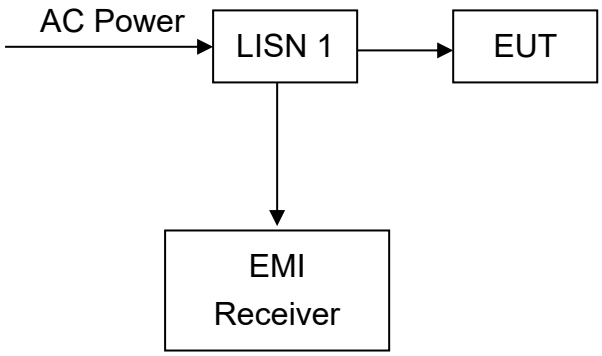

The EUT are connected to the main power through a line impedance stabilization network (LISN). This provides a 50 ohm/50 uH coupling impedance for the measuring equipment. The peripheral devices are also connected to the main power through a LISN that provides a 50 ohm/50 uH coupling impedance with 50 ohm termination.

Both sides (Line and Neutral) of AC line are checked for maximum conducted interference. In order to find the maximum emission, the relative positions of equipment and all of the interface cables must be changed according to ANSI C63.10/2013 on conducted measurement.

The bandwidth of the field strength meter (R & S Test Receiver ESCI 30) is set at 9 kHz.

7.3 Limit

Frequency (MHz)	Conducted Limit (dBuV)	
	Q.P.	Ave.
0.15~0.50	66 – 56*	56 – 46*
0.50~5.00	56	46
5.00~30.0	60	50

*Decreases with the logarithm of the frequency.

7.4 Power Line Conducted Emission test data

Applicant: DOKE COMMUNICATION (HK) LIMITED
Date of Test: 07 March 2025 Model: BV6200 Plus
Worst Case Operating Mode: Transmit (5190MHz)
Phase: Live

Conducted Emission Test

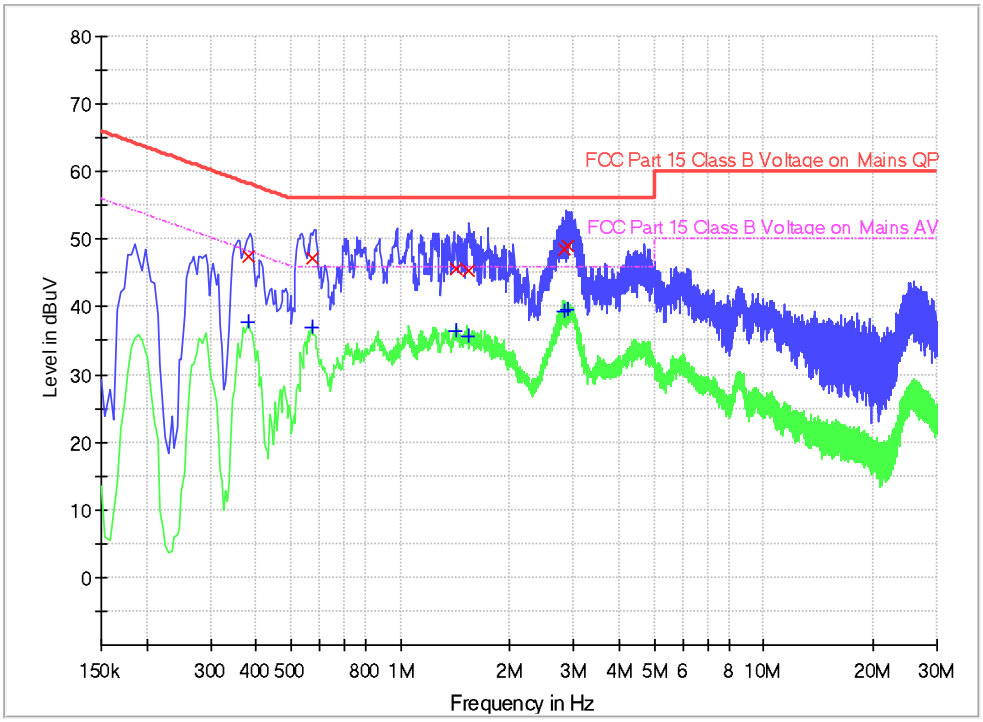

Limit and Margin QP

Frequency (MHz)	Quasi Peak (dBµV)	Bandwidth (kHz)	Line	Corr. (dB)	Margin (dB)	Limit (dBµV)
0.382000	47.4	9.000	L1	9.6	10.8	58.2
0.570000	47.3	9.000	L1	9.6	8.7	56.0
1.430000	45.7	9.000	L1	9.6	10.3	56.0
1.546000	45.5	9.000	L1	9.6	10.5	56.0
2.818000	48.4	9.000	L1	9.7	7.6	56.0
2.894000	49.0	9.000	L1	9.7	7.0	56.0

Limit and Margin AV

Frequency (MHz)	Average (dBµV)	Bandwidth (kHz)	Line	Corr. (dB)	Margin (dB)	Limit (dBµV)
0.382000	37.8	9.000	L1	9.6	10.4	48.2
0.570000	36.9	9.000	L1	9.6	9.1	46.0
1.430000	36.5	9.000	L1	9.6	9.5	46.0
1.546000	35.6	9.000	L1	9.6	10.4	46.0
2.818000	39.3	9.000	L1	9.7	6.7	46.0
2.894000	39.6	9.000	L1	9.7	6.4	46.0

Remark:
1. Corr. Factor (dB) = LISN Factor (dB) + Cable Loss (dB)
2. Margin (dB) = Limit (dBµV) – Level (dBµV)

Applicant: DOKE COMMUNICATION (HK) LIMITED
Date of Test: 07 March 2025
Model: BV6200 Plus
Worst Case Operating Mode:
Transmit (5190MHz)
Phase: Neutral

Conducted Emission Test

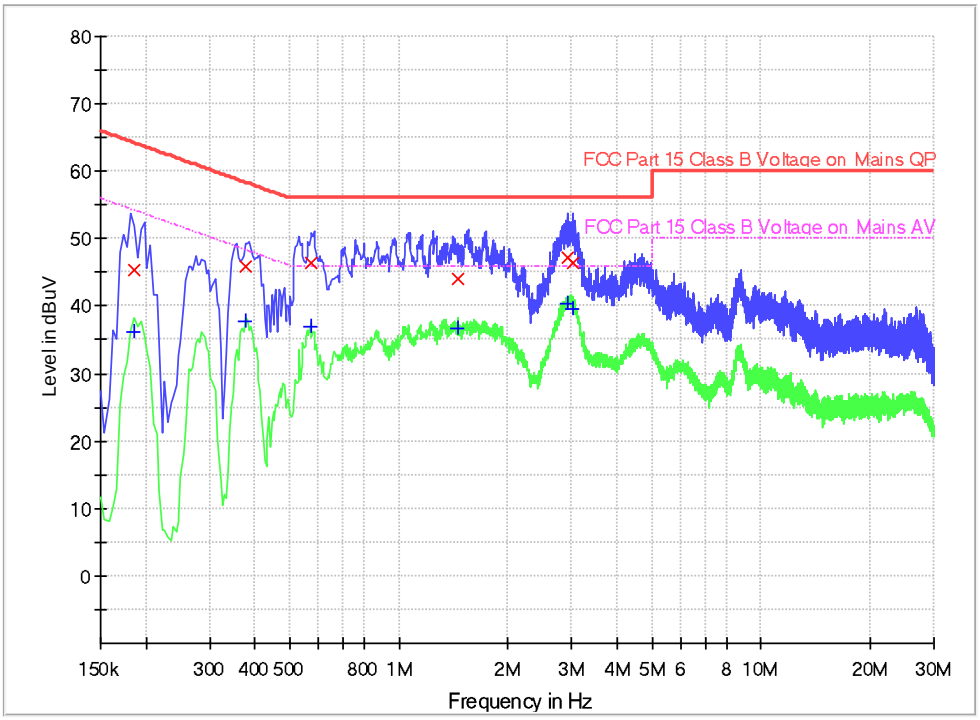

Limit and Margin QP

Frequency (MHz)	Quasi Peak (dBµV)	Bandwidth (kHz)	Line	Corr. (dB)	Margin (dB)	Limit (dBµV)
0.186000	45.5	9.000	N	9.6	18.7	64.2
0.378000	45.8	9.000	N	9.6	12.5	58.3
0.570000	46.4	9.000	N	9.6	9.6	56.0
1.454000	44.0	9.000	N	9.6	12.0	56.0
2.914000	47.3	9.000	N	9.7	8.7	56.0
3.022000	46.3	9.000	N	9.7	9.7	56.0

Limit and Margin AV

Frequency (MHz)	Average (dBµV)	Bandwidth (kHz)	Line	Corr. (dB)	Margin (dB)	Limit (dBµV)
0.186000	36.2	9.000	N	9.6	18.0	54.2
0.378000	37.9	9.000	N	9.6	10.4	48.3
0.570000	36.9	9.000	N	9.6	9.1	46.0
1.454000	36.7	9.000	N	9.6	9.3	46.0
2.914000	40.5	9.000	N	9.7	5.5	46.0
3.022000	39.7	9.000	N	9.7	6.3	46.0

Remark:
1. Corr. Factor (dB) = LISN Factor (dB) + Cable Loss (dB)
2. Margin (dB) = Limit (dBµV) – Level (dBµV)

8. Frequency Stability Test

8.1 Test setup & procedure

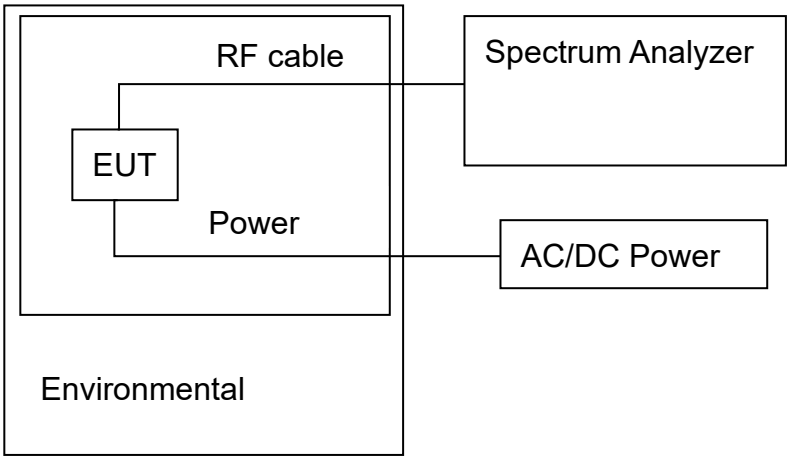

Note1: The frequency stability is measured with the temperature variation range of -10℃ to +60℃, and voltage supply variation range of 85% to 115% of nominal DC supply voltage.

Note2: To ensure emission at the band-edge is maintained within the authorized band, the frequency 802.11a/n-HT20/n-HT40/ac-HT20/HT40/HT80 channel 36, 40, 48, 149, 157, 165, 38, 46, 151, 159, 42, 155 are selected to test and the worst case was reported.

8.2 Frequency Stability Test Data

20℃ is taken as temperature in normal condition (NT).

3.8 VDC is normal voltage (NV)

3.23 VDC is low voltage (LV)

4.37 VDC is high voltage (HV)

The more detail please refer to Appendix D of “250219088SZN-004_Appendix”.

Note: All emissions are maintained within the band of operation under all conditions of normal operation as specified in the user manual. It fulfills the requirement of 15.407(g).

Appendix A: Test equipment list

Equipment No.	Equipment	Manufacturer	Model No.	Serial No.	Cal. Date	Due Date
SZ182-02	RF Power Meter	Anritsu	ML2496A	1302005	2024-04-22	2025-04-22
SZ182-02-01	Power Sensor	Anritsu	MA2411B	1207429	2024-04-22	2025-04-22
SZ061-13	BiConiLog Antenna	ETS	3142E	00217919	2022-07-13	2025-07-13
SZ061-06	Active Loop Antenna	Electro-Metrics	EM-6876	217	2021-05-18	2025-05-18
SZ185-03	EMI Receiver	R&S	ESR7	101975	2024-04-23	2025-04-23
SZ061-08	Double - Ridged Waveguide Horn Antenna	ETS	3115	00092346	2024-09-13	2027-09-13
SZ056-06	Signal Analyzer	R&S	FSV 40	101101	2024-12-06	2025-12-06
SZ181-08	Microwave System Amplifier	keysight	83017A	MY57280108	2024-07-29	2025-07-29
SZ188-05	Anechoic Chamber	ETS	FACT 3-2.0	CT001880-Q13914102	2021-05-25	2026-05-25
SZ062-02	RF Cable	RADIALL	RG 213U	--	2024-11-01	2025-05-01
SZ062-05	RF Cable	RADIALL	0.04-26.5GHz	0833254	2024-11-01	2025-05-01
SZ062-12	RF Cable	RADIALL	0.04-26.5GHz	083387	2024-11-01	2025-05-01
SZ185-02	EMI Test Receiver	R&S	ESCI	100692	2024-07-09	2025-07-09
SZ187-02	Two-Line V-Network	R&S	ENV216	100073	2024-04-23	2025-04-23
SZ188-03	Shielding Room	ETS	RFD-100	4100	2022-12-20	2025-12-20
SZ062-16	RF Cable	HUBER+SUHNER	CBL2-BN-1m	110127-2231000	2024-07-10	2025-07-10
SZ016-12	Programmable Temperature & Humidity Chamber	Taili	MHK-120NK	AB0105	2024-12-04	2025-12-04

Expanded uncertainty of radiated emission measurement is ±4.9 dB.

Expanded uncertainty of conducted emission measurement is ±3.2 dB.

********** End of Report**********