PCB ANT Antenna Test Report

Customer	原图
Project	PCB ANT
Antenna BAND	
Product Description	PIFA(PCB ANT)
Product No	V1.0(PCB)

Product Overview & Dimension

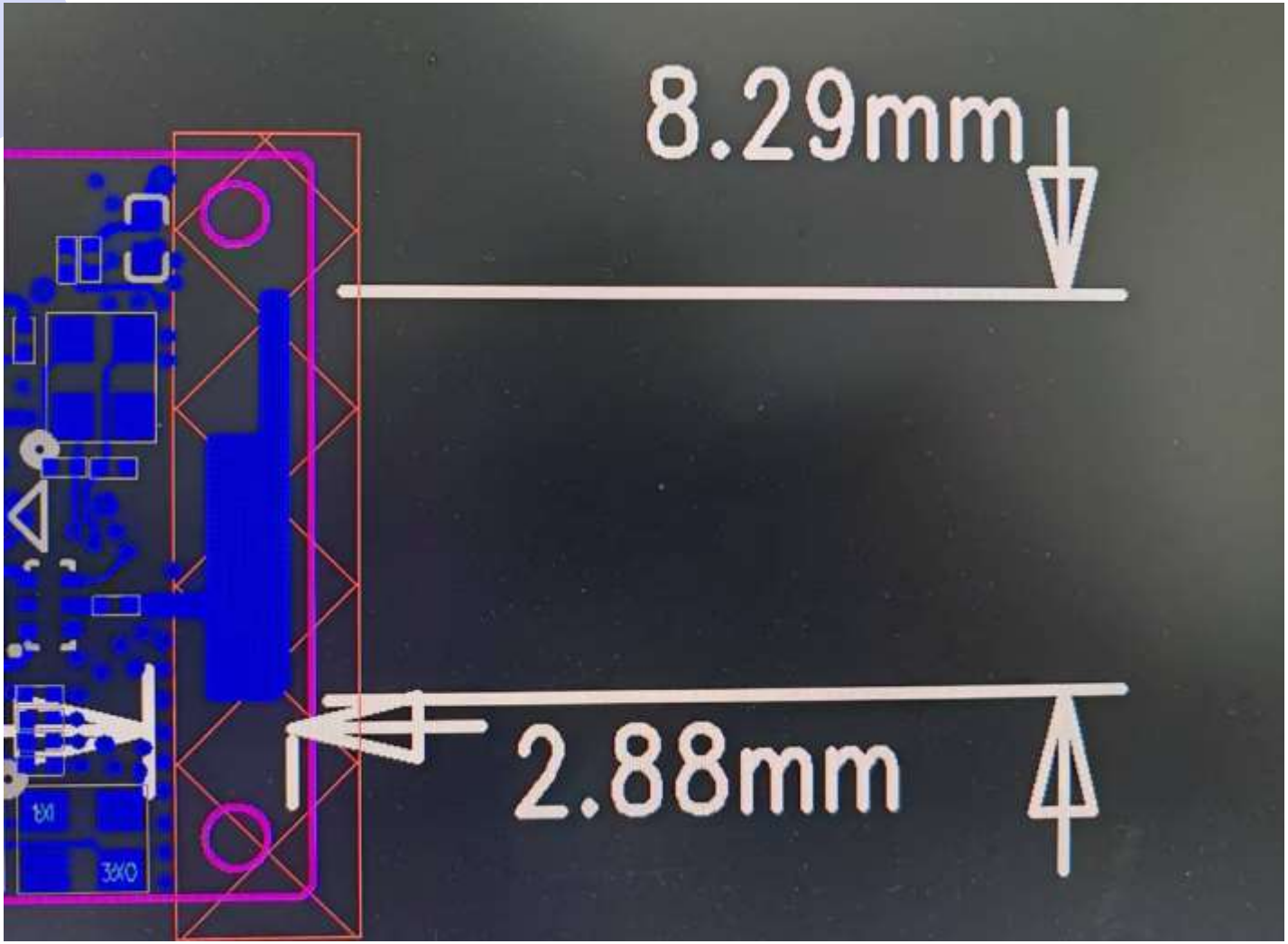

This report is to measure the performance of BT antenna for **PCB ANT**.The antennaoperating frequency at (2400-2500MHZ) , All test data are showed as below.

Content

1. Product Overview & Dimension
2. Test system
3. Antenna Matching Network
4. Test Result
   - 4.1 S11 Parameter
   - 4.2 Gain & Efficiency
   - 4.3 Test coordinate
   - 4.4 2D Pattern
   - 4.5 OTA Data
   - 4.6 BT Boot measured
5. Antenna Assembly & environmental processing

2.Test System

Sequence Number	Test Item	equipment
S parameter	VSWR	Agilent 5071C & HP 8753
OTA Test	TRP&TIS	CMW500 &CMW270 ETS& FT SG24
Gain & Efficiency	Gain & Efficiency	ETS&FT SG24 Agilent 5071C

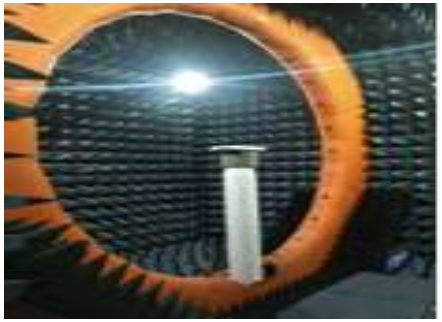

Test Result

Sample status & coordinates

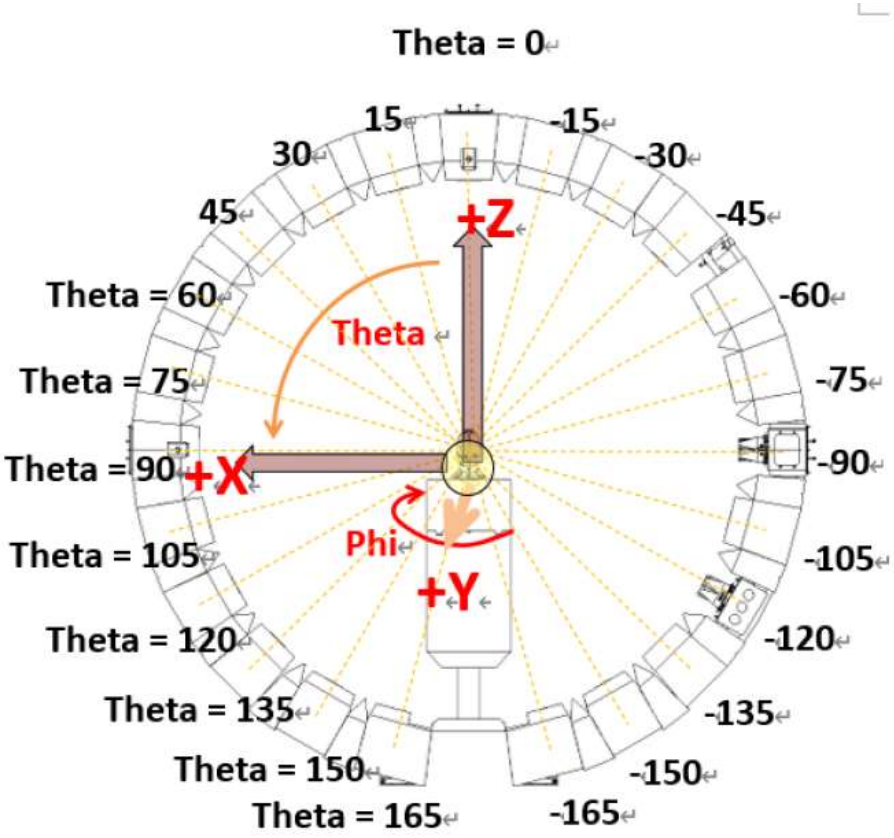

S11

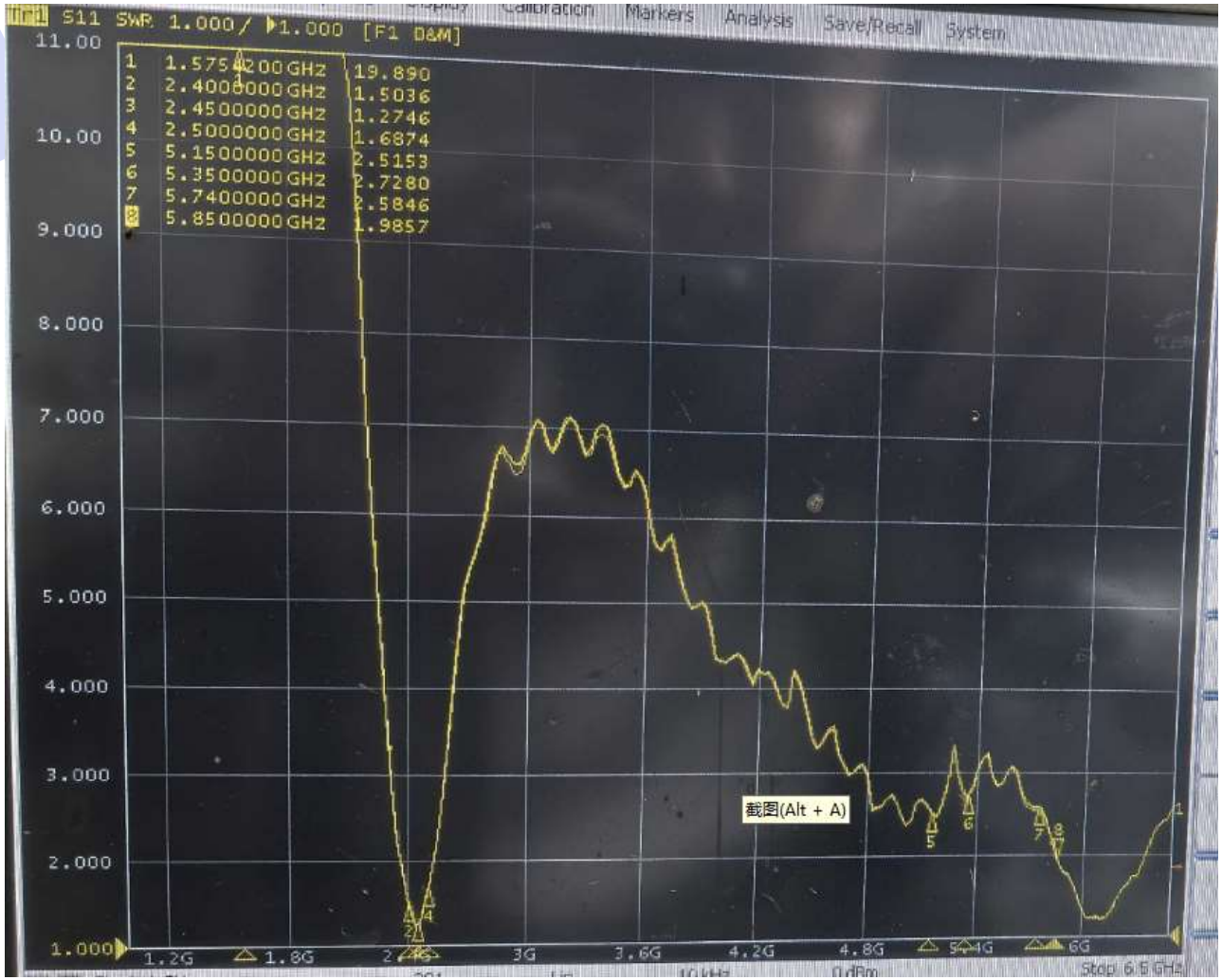
S11 SWR 1.000/ 1.000 [F1 D&M]
Calibration
Markers
Analysis
Save/Recall
System
1 1.5754200GHz 19.890
2 2.4000000GHz 1.5036
3 2.4500000GHz 1.2746
4 2.5000000GHz 1.6874
5 5.1500000GHz 2.5153
6 5.3500000GHz 2.7280
7 5.7400000GHz 2.5846
8 5.8500000GHz 1.9857
11.00
10.00
9.000
8.000
7.000
6.000
5.000
4.000
3.000
2.000
1.000
1.2G
1.8G
3G
3.6G
4.2G
4.8G
6G
截图(Alt + A)

Match network parameters

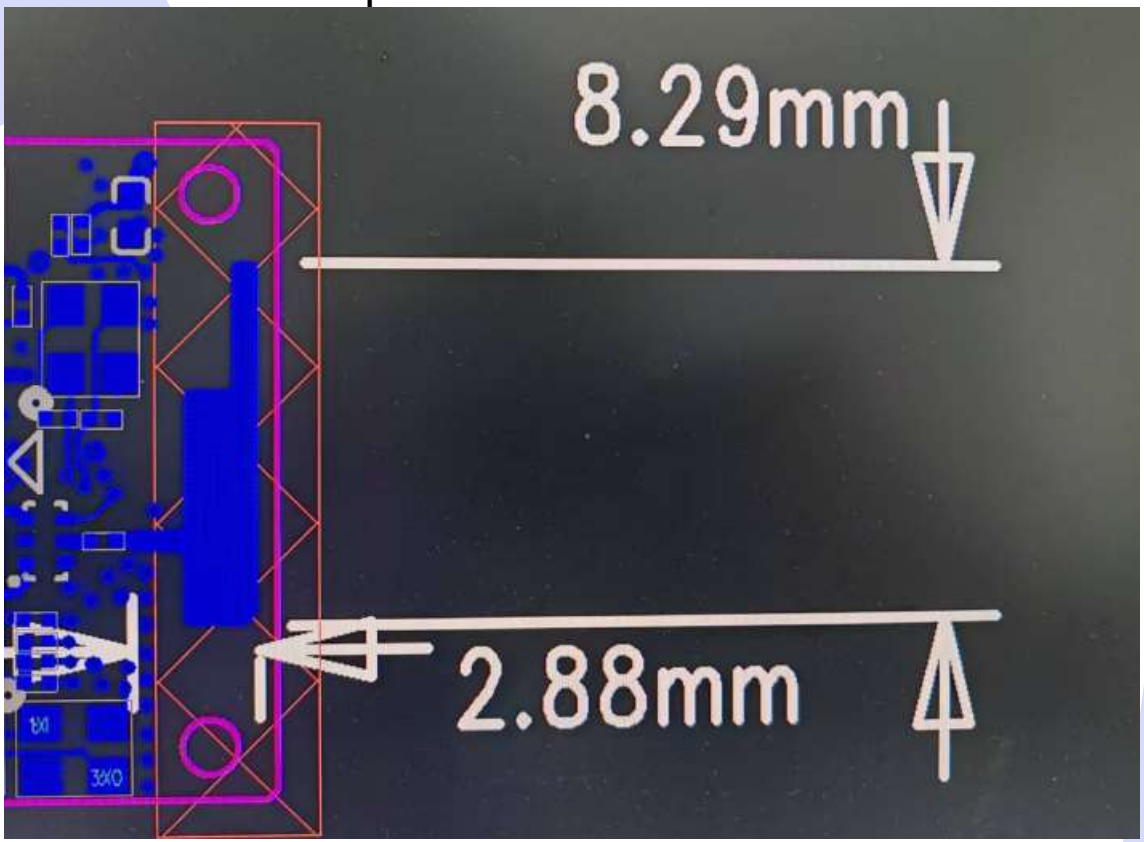

Suggest using Murata brand high-precision capacitors, resistors, and inductors，The packaging specification is 0402

Frequency (MHz)	Efficiency (%)	Gain (dBi)
2400	46.6	0.7
2420	47.3	0.75
2440	48.8	0.89
2460	48	0.8
2480	46.9	0.6
2500	45.9	0.54
5700	46.3	1.2
5750	48.5	1.3
5800	50.1	1.5
5850	47.2	1.5
5900	47.5	1.4

OTA DATA-BT ANT

Shenzhen Hetuo Technology Co., Ltd

3D Pattern

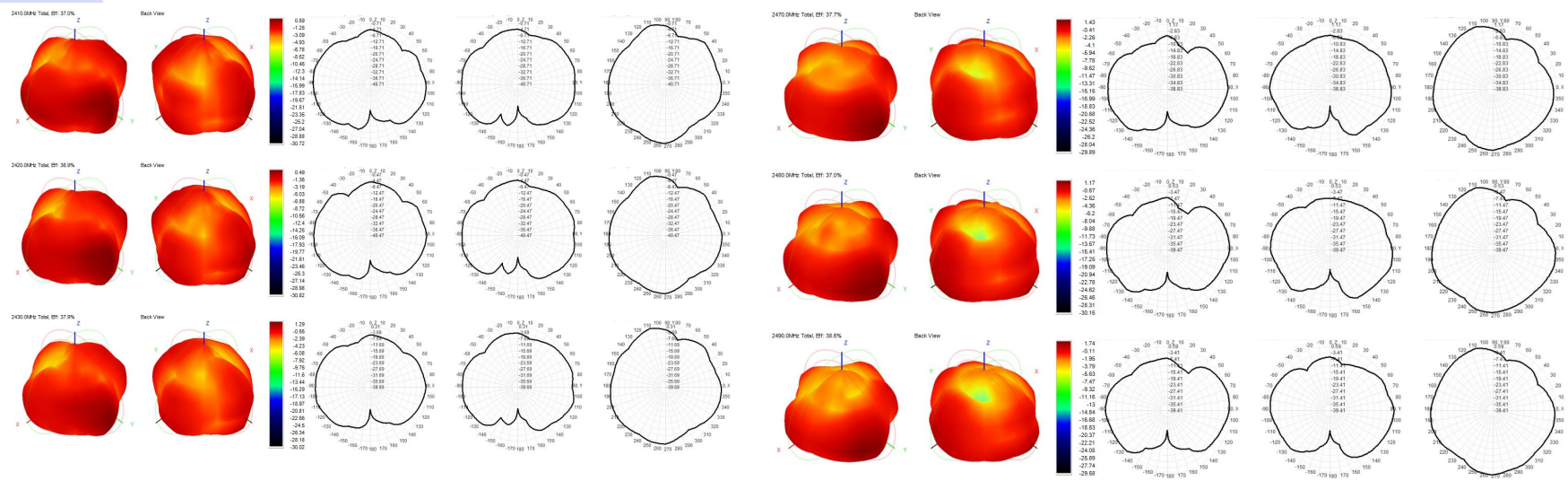

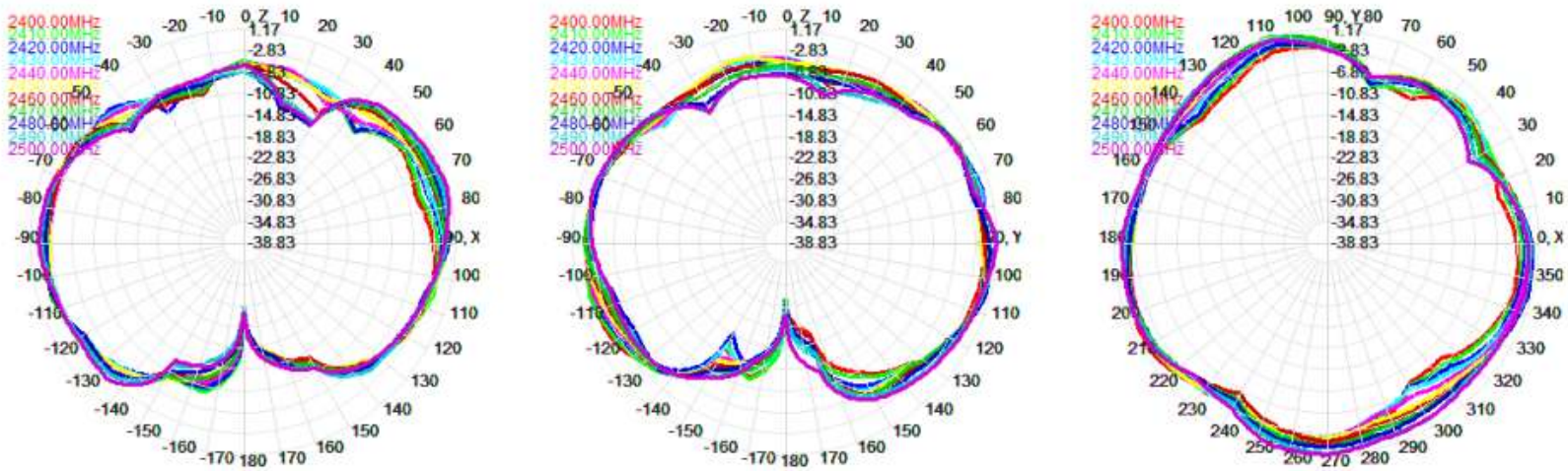

OTA DATA- WIFI-ANT

Shenzhen Hetuo Technology Co., Ltd

3D Pattern

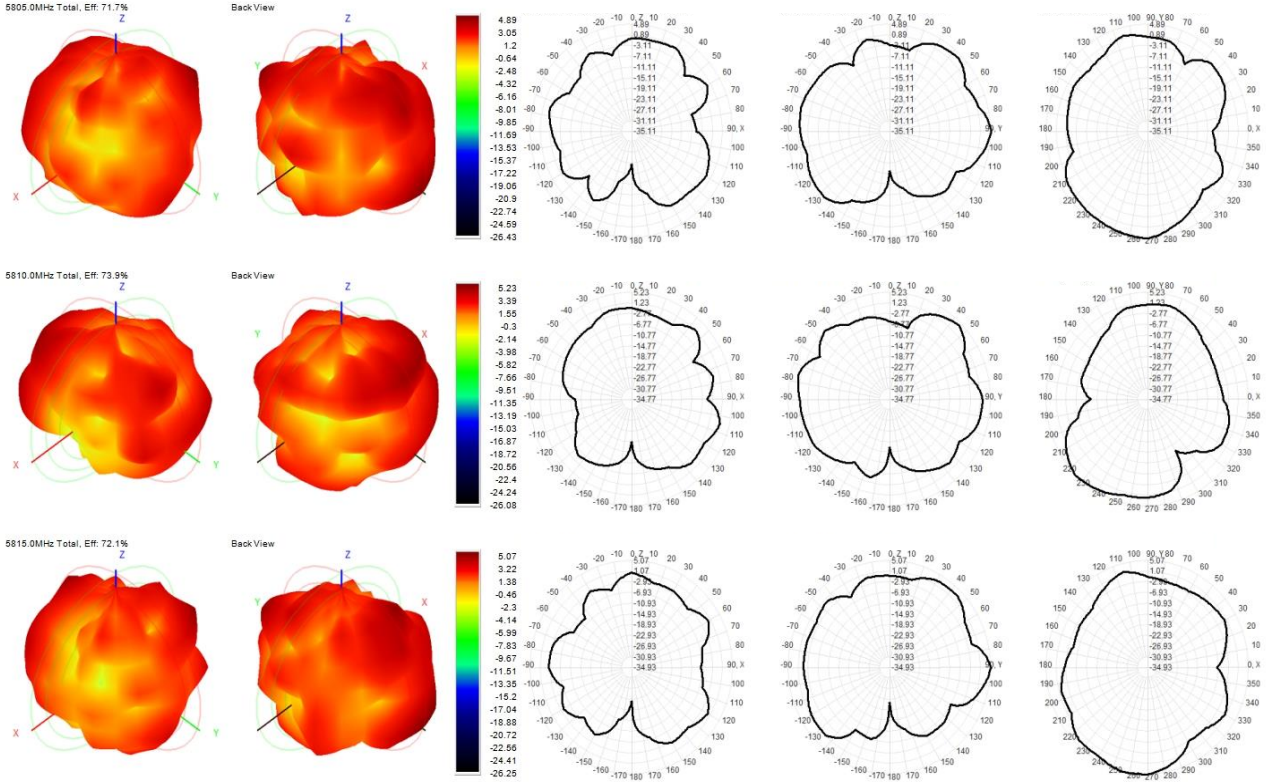

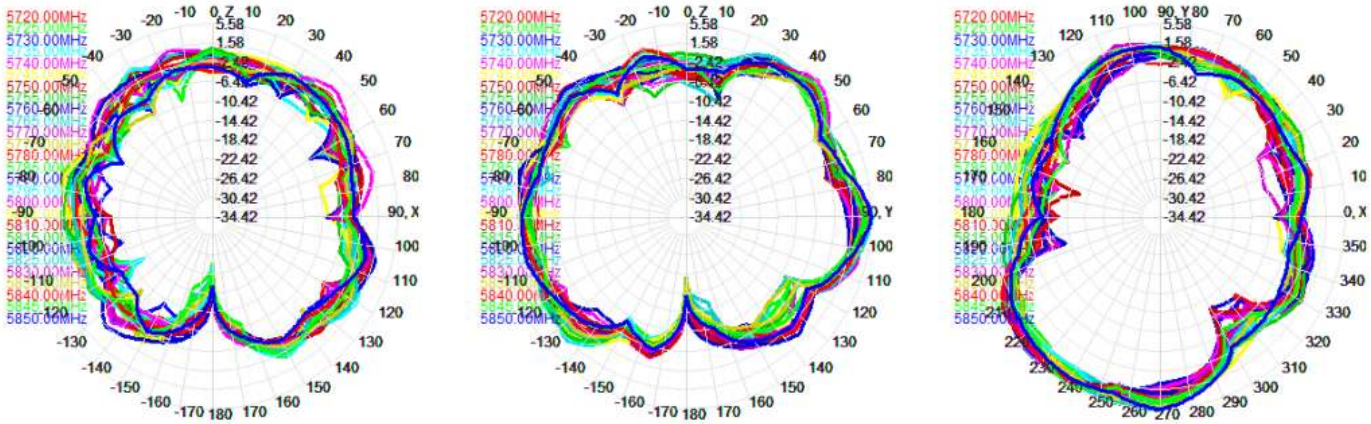

Thanks for your comment!

- Shenzhen Hetuo Technology Co., Ltd
- 1202B, Building C6, Hengfeng Industrial City, Xixiang, Bao'an District, Shenzhen
- DT;15302757983