ARC2.33
77GHz Corner Radar
Product Specification

<customer version>

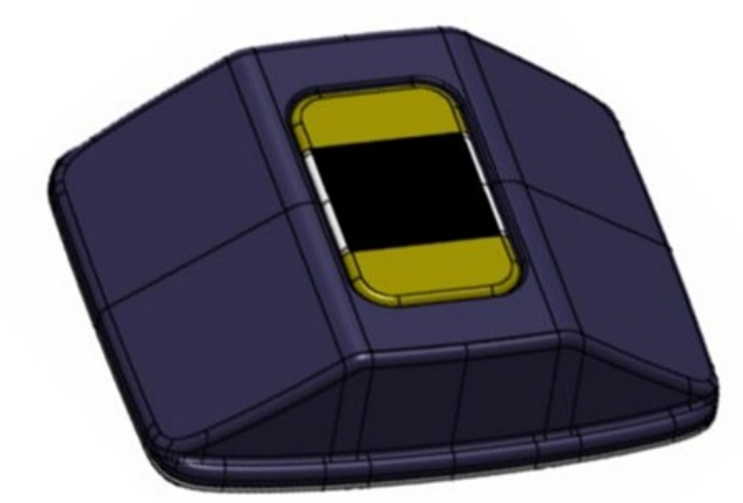

Nanjing Chuhang Technology Co., Ltd.

© Nanjing Chuhang Technology Co., Ltd. 2020. All rights reserved, also regarding any disposal, exploitation, reproduction, editing, distribution, as well as in the event of applications for industrial property rights.

1 General description....4
1.1 Introduction....4
1.2 Terms and abbreviations....4
2 Radar system description....4
2.1 Functional principle....4
2.1.1 FMCW radar principle....4
2.1.2 Angular determination by phase measurement method....6
2.2 System structure....7
2.3 Mechanical structure....8
2.3.1 Radar exploded view....8
2.3.2 Radar dimension....8
2.3.3 Product materials....9
2.3.4 Connector specification....9
2.4 Software architecture....10
2.5 Algorithm structure....11
2.5.1 Signal Processing Module....11
2.5.2 Data Processing Module (Tracker)....12
2.5.3 Function Application Module....13
2.6 Radar characteristics....13
2.6.1 General characteristics....13
2.6.2 Operational supply voltage....14
2.6.3 Supplementary information....14
3 System functions....16
3.1 Basic functions....16
3.1.1 Object output list....16
3.1.2 Fault diagnosis....17
3.2 Application functions....17
3.2.1 Blind Spot Detection (BSD)....17
3.2.2 Lane Change Assistant (LCA)....17
3.2.3 Door Opening Warning (DOW)....18
3.2.4 Rear Cross Traffic Alert (RCTA)/Rear Cross Traffic Assist with Braking (RCTB) 18
3.2.5 Traffic Jam Assistance (TJA)....18
3.2.6 High Way Assistant (HWA)....19
4 Installation specification....19
4.1 Installation requirements....19
5 Angular alignment/calibration....21

© Nanjing Chuhang Technology Co., Ltd. 2020. All rights reserved, also regarding any disposal, exploitation, reproduction, editing, distribution, as well as in the event of applications for industrial property rights.

5.1 End-of-line calibration 21
5.2 Post-sales calibration 22
6 Design verification 23
6.1 Design standards 23
6.2 DV test verification 25

© Nanjing Chuhang Technology Co., Ltd. 2020. All rights reserved, also regarding any disposal, exploitation, reproduction, editing, distribution, as well as in the event of applications for industrial property rights.

1 General description

1.1 Introduction

This document describes the ARC2.33 corner radar of Nanjing Chuhang Technology Co., Ltd. (hereinafter referred to as Chuhang Tech). It includes product specification, functional principle, product function, installation, and calibration method.

1.2 Terms and abbreviations

Abbreviation	Full name
CAN	Controller Area Network
VCAN	Vehicle CAN
PCAN	Private CAN
FMCW	Frequency Modulated Continuous Wave
LCW	Lane Change Warning
TTC	Time to Collision
dB	Decibel
dBm	Decibel milliwatts
dBsm	Decibel square meters
RCS	Radar Cross Section

2 Radar system description

2.1 Functional principle

2.1.1 FMCW radar principle

Electromagnetic (EM) waves within frequency range between 300 MHz to 300 GHz are defined as microwaves. The propagation velocity of microwaves in the air is almost equal to the speed of light in vacuum, which is $3 \times 10^8 \mathrm{m/s}$. A radar system generally consists of transmitter-receiver module, transmitting and receiving antenna (TX-RX Antenna) and processing unit. Microwaves are radiated by the transmitting antenna, reflected by the target object, and received by the receiving antenna. During this process, the time delay of the microwave between TX and RX antenna can be measured, the distance between the target object and radar is then calculated. The measurement principle of the radial distance between radar antenna and object is shown in Figure 1. Assuming the distance between radar and object is R, the travel time of EM wave between transmitter and receiver is $\mathrm{t_d}$, the travel distance of microwave from radar transmitter

© Nanjing Chuhang Technology Co., Ltd. 2020. All rights reserved, also regarding any disposal, exploitation, reproduction, editing, distribution, as well as in the event of applications for industrial property rights.

to the target object and reflected to radar receiver is thus 2R, the speed of light is c, $c = 3 \times 10^8 m/s$; therefore, R is calculated by equation $R = \frac{1}{2} \cdot c \cdot t_d$.

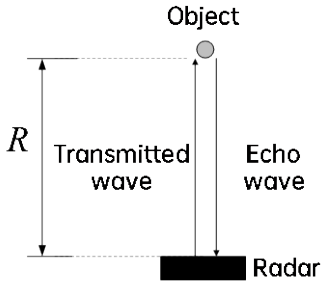

Figure 1 Radar distance detecting principle

FMCW radar generates a saw-tooth wave form, see Figure 2. The radiated EM wave will be reflected/scattered by the target object, part of the EM wave will be captured by the receiving antenna of the radar. The received signal will be down-converted in the mixer with local oscillator (LO). For saw-tooth wave, frequency is linearly changing with time, so is the LO of the radar. Due to the delay t_d, the received signal has the frequency at time $t - t_d$ while the LO has the frequency at time t. In this way, after the mixer an intermediate frequency (IF) is obtained, the IF is equal to the difference between received frequency and LO. After LNA, filter, ADC and baseband processing, the distance of the target object can be extracted.

In addition, to obtain the radial velocity of the target object, the radar has to transmit the single sawtooth signal (Chirp) in a periodical way (frame). The radial velocity is calculated by in-time phase shift of the adjacent chirp signals. By equal interval sampling, the sampled data will be processed with FFT and the outcome is saved in the storage matrix (radar data cube). The processor combines all received chirp signals in one frame and sequentially performs FFT to each single chirp.

The combination of distance FFT and doppler/velocity FFT can be considered as a 2-D (two-dimensional) FFT processing of the digital sampling data in each frame. The 2-D FFT enables the simultaneous measurement of target distance and velocity.

© Nanjing Chuhang Technology Co., Ltd. 2020. All rights reserved, also regarding any disposal, exploitation, reproduction, editing, distribution, as well as in the event of applications for industrial property rights.

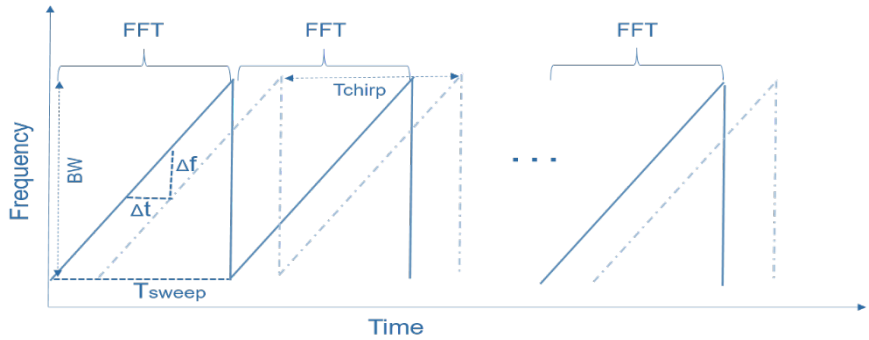

Figure 2 RF sawtooth wave

The correlation between distance and its resolution can be expressed by:

$$R = \frac{cT_{sweep}}{2BW} f_{IF} \qquad R_{res} = \frac{c}{2BW}$$

where BW is the sweeping bandwidth, T_{sweep} is the sweeping period, f_{IF} is the IF frequency, c is the speed of light.

The correlation between velocity and its resolution can be expressed by:

$$V = \frac{c}{2f} f_d \qquad V_{res} = \frac{c}{2f \cdot N \cdot T_{chirp}}$$

where c is the speed of light, f_d is the doppler frequency, f is the center frequency of the chirp, N is the number of chirps, T_{chirp} is the period of the chirp.

2.1.2 Angular determination by phase measurement method

The phase measurement method is used to measure the angle of the target object based on the phase difference among various receiving signals. As shown in Figure 3, the angle between the radar and the target object is θ. After reflection and transmission, the receiving wave can be considered as plane wave. Assuming the antenna spacing is d, due to the different transmitting distance ΔR, there must be a phase difference between the two receiving signals at adjacent antenna. The phase difference $\Delta\varphi$ can be expressed by:

$$\Delta\varphi = \frac{2\pi}{\lambda}\Delta R = \frac{2\pi}{\lambda} d \sin\theta$$

where λ is the wavelength. In this way, the angle of the object can be derived by:

$$\theta = \arcsin\left(\frac{\Delta\varphi\lambda}{2\pi d}\right)$$

© Nanjing Chuhang Technology Co., Ltd. 2020. All rights reserved, also regarding any disposal, exploitation, reproduction, editing, distribution, as well as in the event of applications for industrial property rights.

In digital processing of radar system, the phase difference will be obtained by IQ data. If φ_1, φ_2 are defined as the phases of the two receiving signals, phase difference can be derived by:

$$\begin{cases} \varphi_1 = \arctan\dfrac{Q_1}{I_1} \\ \varphi_2 = \arctan\dfrac{Q_2}{I_2} \\ \Delta\varphi = \varphi_2 - \varphi_1 \end{cases}$$

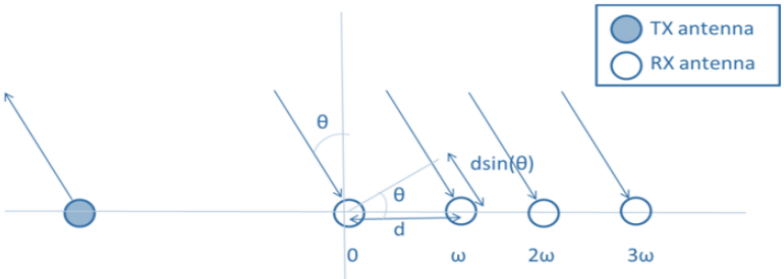

Figure 3 Angular determination by phase measurement method

2.2 System structure

The system structure of ARC2.33 corner radar is shown in Figure 4. There are 3 TX antennas and 4 RX antennas. The radar supports

This radar supports KL30 (power-up supply).

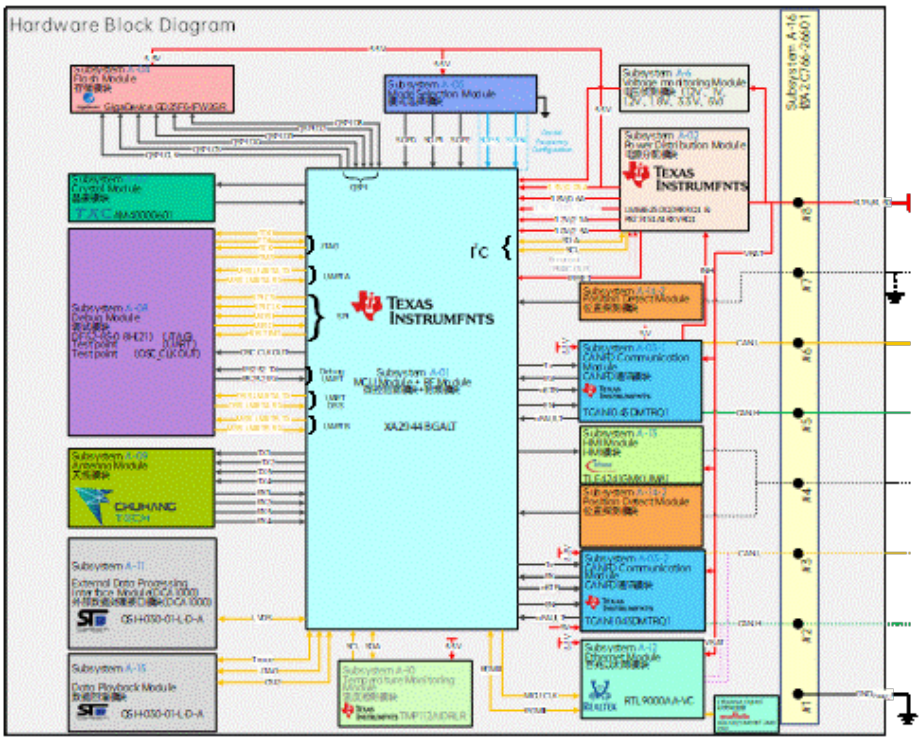

Figure 4 System hardware structure

© Nanjing Chuhang Technology Co., Ltd. 2020. All rights reserved, also regarding any disposal, exploitation, reproduction, editing, distribution, as well as in the event of applications for industrial property rights.

Main module type:

Module	Manufacturer	Type
SOC	TI	AWR2944ABGALT
Flash	Giga Device	GD25B32ETAG
CAN	TI	TCAN1043DMTRQ1
PMIC	TI	LP877451A1RXVRQ1

2.3 Mechanical structure

2.3.1 Radar exploded view

ARC2.33 offers a compact solution, with antennas and SOC integrated into one PCB and packaged in radar housings, see Figure 5.

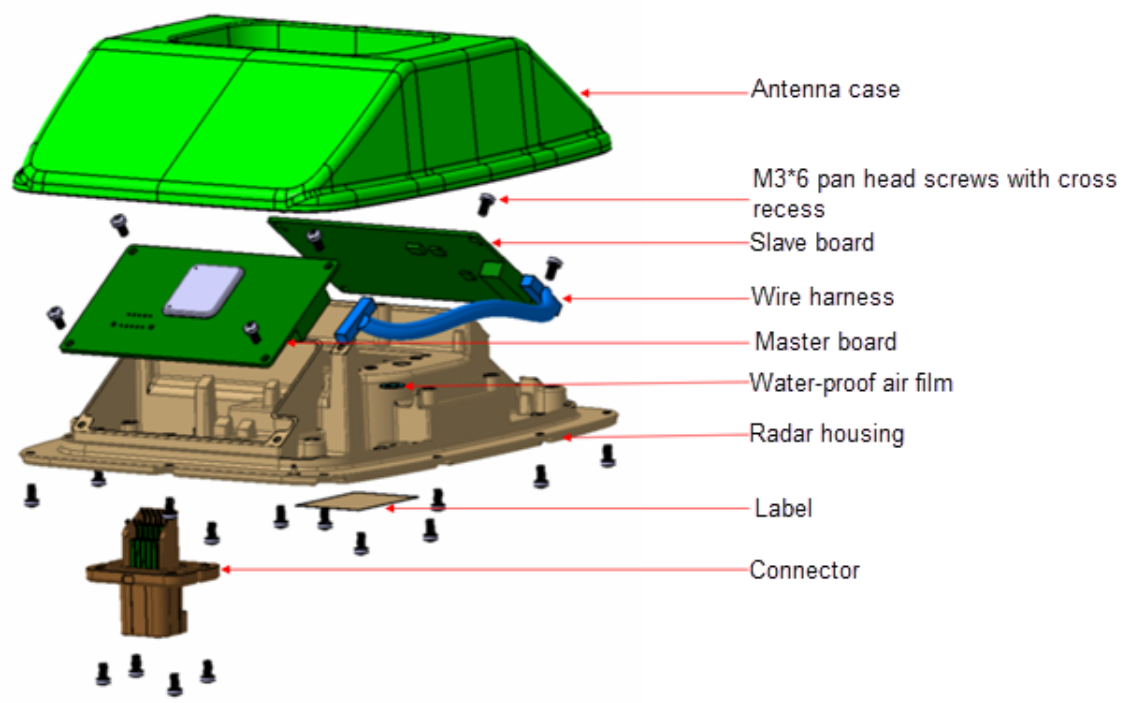

Figure 5 Radar structure

2.3.2 Radar dimension

© Nanjing Chuhang Technology Co., Ltd. 2020. All rights reserved, also regarding any disposal, exploitation, reproduction, editing, distribution, as well as in the event of applications for industrial property rights.

Figure 6 shows the dimension of radar housing.

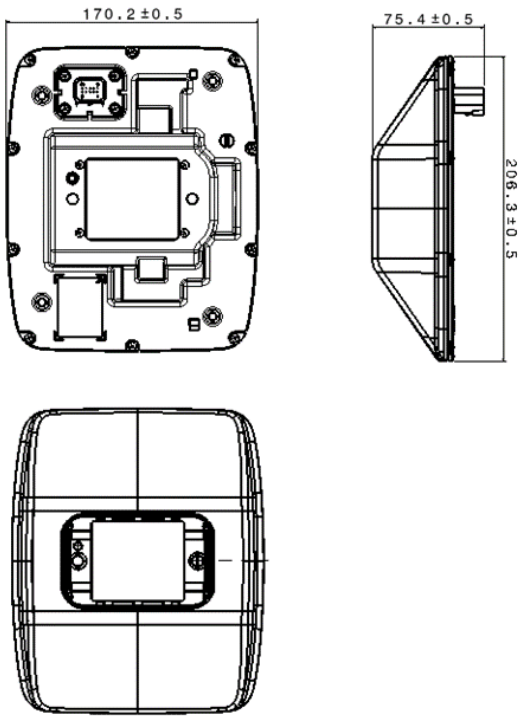

Figure 6 Radar 2D drawing

2.3.3 Product materials

Name	Quantity	Material
Antenna case	1	PBT+GF30
M3*6 pan head screws with cross recess	26	SUS 304
Slave board	1	FR4
Wire harness	1	/
Master board	1	FR4
Water-proof air film	1	/
Radar housing	1	ADC12
Connector	1	PBT+GF30

2.3.4 Connector specification

Specifications and types of connectors to cables are as follows:

Type	TE 3-2098269-1
Perviousness	IP67

© Nanjing Chuhang Technology Co., Ltd. 2020. All rights reserved, also regarding any disposal, exploitation, reproduction, editing, distribution, as well as in the event of applications for industrial property rights.

Radar pin definition is shown as follows:

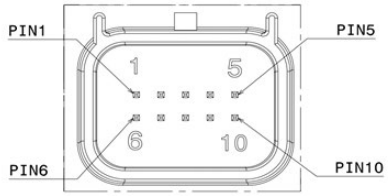

Number	Radar pin	Function
1	GND	Ground
2	CAN_L	Vehicle CAN_L
3	CAN_H	Vehicle CAN_H
4	NC	
5	NC	
6	KL30	Supply KL30
7	NC	
8	Position	Left or right, grounded on the left
9	NC	
10	NC	

2.4 Software architecture

The operation software of ARC2.33 corner radar is developed based on ASPICE Level2 requirements. By using AutoSAR architecture, see Figure 7, the modular design not only realizes an agile development, but also makes further maintenance and upgrade very easy.

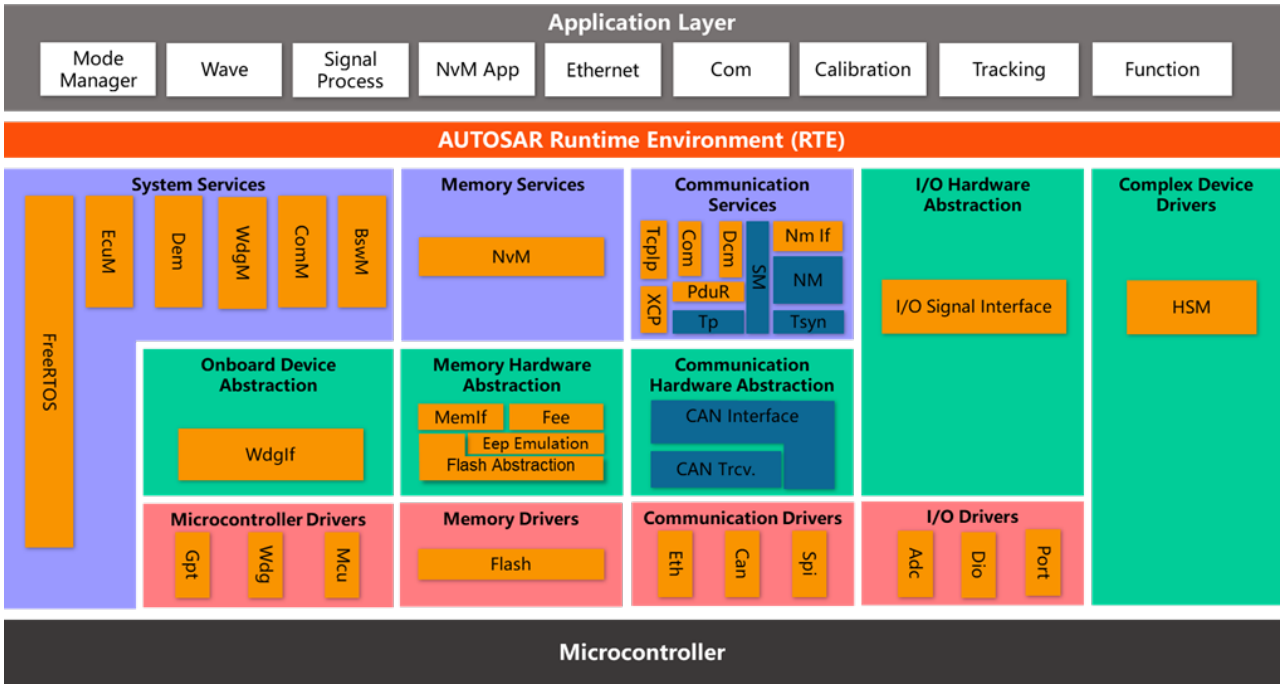

© Nanjing Chuhang Technology Co., Ltd. 2020. All rights reserved, also regarding any disposal, exploitation, reproduction, editing, distribution, as well as in the event of applications for industrial property rights.

Figure 7 Software architecture

2.5 Algorithm structure

The software module in application layer mainly includes signal processing, data processing and function application.

2.5.1 Signal Processing Module

The Signal Processing Module focuses on processing the radar ADC raw signals and converting them to point cloud data, see Figure 8.

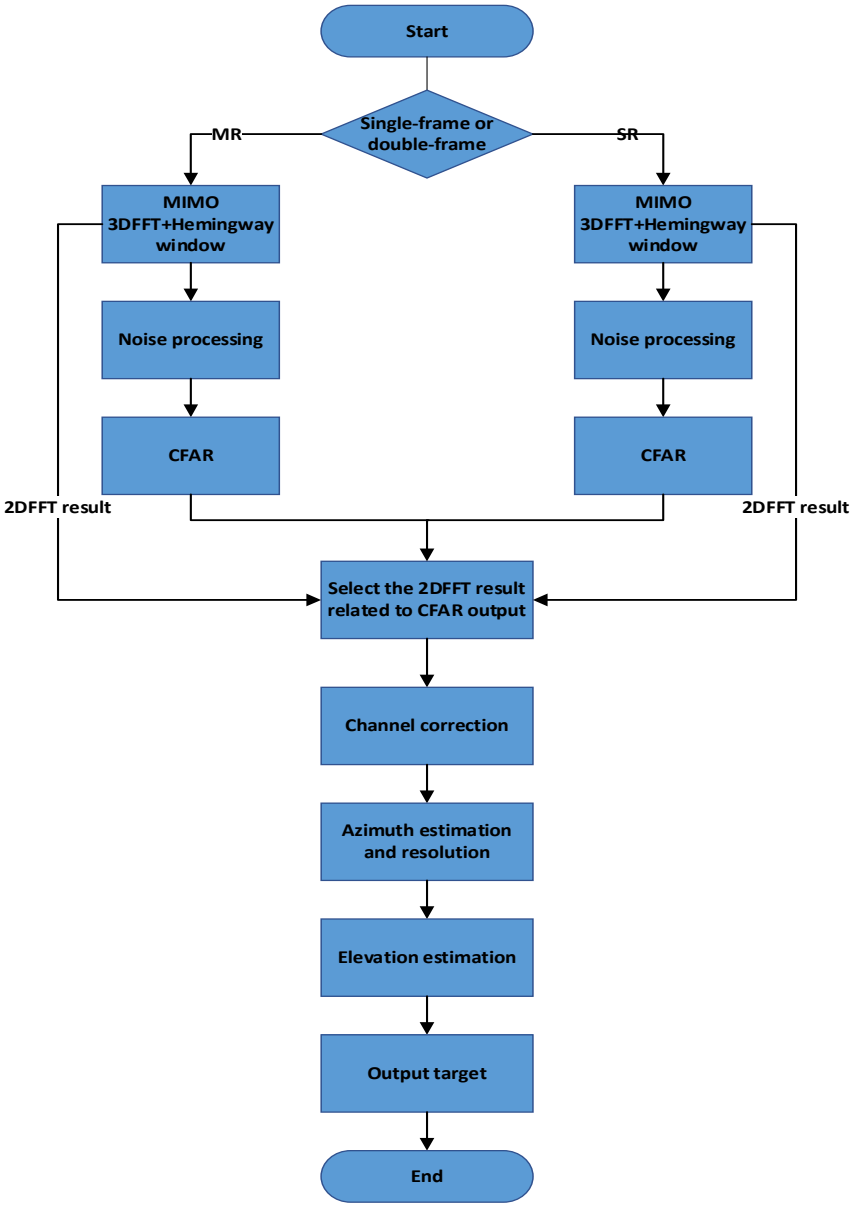

Figure 8 Signal processing flow chart

© Nanjing Chuhang Technology Co., Ltd. 2020. All rights reserved, also regarding any disposal, exploitation, reproduction, editing, distribution, as well as in the event of applications for industrial property rights.

2.5.2 Data Processing Module (Tracker)

The Data Processing Module processes the point cloud data, by using cluster tracking algorithm to convert point cloud data into target object.

The Chuhang Tech self-developed target tracking algorithm realizes the detection and stable tracking of either dynamic or static objects based on their point cloud generated by ARC2.33 radar product. It provides a series of kinematic and non-kinematic values, such as position, velocity, acceleration, direction, classification (i.e., truck, car, motorcycle, pedestrian), possibility of exist and dimension. In order to achieve an agile algorithm development and process management, Chuhang Tech uses a hierarchical software framework in the tracking algorithm module. It successfully achieves fast development and fast integration of the software.

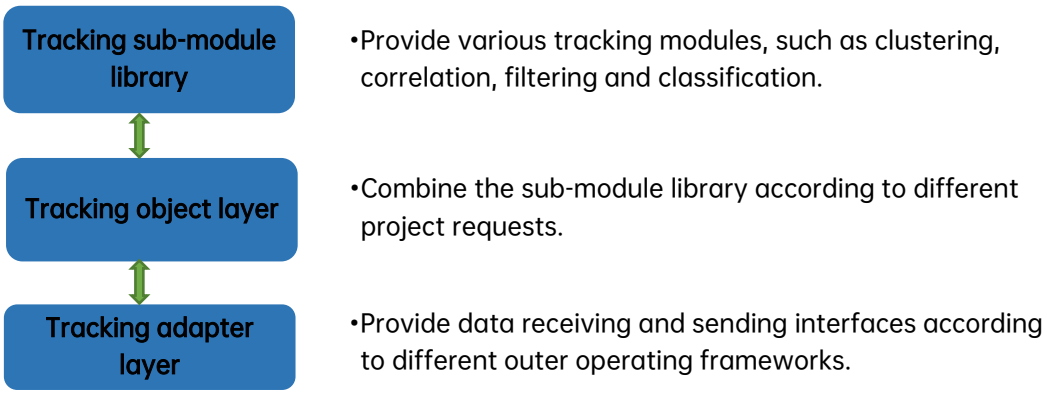

Figure 9

A standard algorithm framework is used in the tracking module, which consists of four modules: clustering, correlation, filtering and tracking management, see in Figure 10.

© Nanjing Chuhang Technology Co., Ltd. 2020. All rights reserved, also regarding any disposal, exploitation, reproduction, editing, distribution, as well as in the event of applications for industrial property rights.

Clustering

- Module function: Detect and cluster the dynamic objects in point cloud.
- Module content: According to the computing power and clustering granularity request, provide DBSCAN, HDBSCAN and other algorithms, and optimize the algorithm to reduce complexity.

Correlation

- Module function: Associate existing trajectory and clustered dynamic objects.
- Module content: Provide Hungarian, JPDA, JIPDA and other classical algorithms, and optimize the algorithms based on mmWave radar characteristics.

Filtering

- Module function: Kinematic filtering and non-kinematic filtering (object classification, dimension estimation) on associated trajectory.
- Module content: According to the computing demand, the kinematics module provides KF, EKF, UKF, IMM and other filtering algorithms, the non-kinematics module provides object classification, object dimension estimation and other algorithms.

Tracking management

- Module function: Combine, split, create, or delete the existing trajectory.
- Module content: Provide optimized tracking management algorithms based on mmWave characteristics.

Figure 10 Tracking algorithm framework

2.5.3 Function Application Module

The Function Application Module includes target object data processing, vehicle level functional application development based on the required feature.

2.6 Radar characteristics

2.6.1 General characteristics

Operating frequency		77 GHz to 79 GHz
Data cycle		100 ms
Distance	Range	0.2 m~150 m
	Accuracy	±0.1 m
	Resolution	0.2 m
Velocity	Range	-66.7 ~ +66.7 m/s
	Accuracy	±0.1 m/s
	Resolution	0.2 m/s
Angle	Range	-90° ~ +90° (horizontal) -15° ~ +15° (vertical)
	Accuracy	< 1°
	Resolution	3° (horizontal)

© Nanjing Chuhang Technology Co., Ltd. 2020. All rights reserved, also regarding any disposal, exploitation, reproduction, editing, distribution, as well as in the event of applications for industrial property rights.

		7° (vertical)
Antenna channels		3Tx 4Rx
Number of detectable objects		32
Operating voltage		9.0 V ~ 32 V DC
Power consumption		6.0 W
Operating temperature		-40℃ ~ +85℃
IP degree		IP 67

2.6.2 Operational supply voltage

The table below shows the communication status of the radar system at different supply voltages.

Supply voltage	Operating mode	Performance
<9V (± 0.6V hysteresis)	Safe mode	- No communication with vehicle - No fault detection
9V – 18V (±0.6V hysteresis)	Low voltage mode	- Normal communication with vehicle - Normal hardware monitoring - Partial fault monitoring, low voltage fault memory - Restricted functionality
18V – 32V (±0.6V hysteresis)	Normal voltage mode	- Normal communication with vehicle - Normal hardware monitoring - Full fault monitoring
32V – 37V (±0.6V hysteresis)	High voltage mode	- Normal communication with vehicle - Normal hardware monitoring, not including chassis related DTC - Overvoltage fault memory only - Restricted functionality
>37V (± 0.6V hysteresis)	Safe mode	- No communication with vehicle - No fault detection

2.6.3 Supplementary information

2.6.3.1 Manufacturer's name and address

Nanjing Chuhang Technology Co., Ltd.

12th Floor, Inter-Space, No. 9, Yunzheng Street,

Jiangbei New Area, Nanjing,

P.R. China

© Nanjing Chuhang Technology Co., Ltd. 2020. All rights reserved, also regarding any disposal, exploitation, reproduction, editing, distribution, as well as in the event of applications for industrial property rights.

2.6.3.2 Regulations compliance

Changes or modifications not expressly approved by the party responsible for compliance could void the user's authority to operate the equipment.

This equipment has been tested and found to comply with the limits for a Class B digital device, pursuant to Part 15 of the FCC Rules. These limits are designed to provide reasonable protection against harmful interference in a residential installation. This equipment generates, uses and can radiate radio frequency energy and, if not installed and used in accordance with the instructions, may cause harmful interference to radio communications. However, there is no guarantee that interference will not occur in a particular installation.

If this equipment does cause harmful interference to radio or television reception, which can be determined by turning the equipment off and on, the user is encouraged to try to correct the interference by one or more of the following measures:

-- Reorient or relocate the receiving antenna.

-- Increase the separation between the equipment and receiver.

-- Connect the equipment into an outlet on a circuit different from that to which the receiver is connected.

-- Consult the dealer or an experienced radio/TV technician for help.

© Nanjing Chuhang Technology Co., Ltd. 2020. All rights reserved, also regarding any disposal, exploitation, reproduction, editing, distribution, as well as in the event of applications for industrial property rights.

This device complies with FCC radiation exposure limits set forth for an uncontrolled environment. This device should be installed and operated with minimum distance 20cm between the radiator & your body.

3 System functions

The ARC2.33 corner radar supports both target output and point cloud output working modes. The working mode can be set up by diagnosis command.

3.1 Basic functions

3.1.1 Object output list

The radar can stably and simultaneously track 32 objects and output all the target data at customer's disposal for further development.

Output object information	Description
Dist_Long	Longitude distance (X)
Dist_Lat	Latitude distance (Y)
Vrel_Long	Longitude relative velocity (Vx)
Vrel_Lat	Latitude relative velocity (Vy)
Height	Height (H)
Obj_Status	Object status
Obj_Class	Object classification
Possibility of exist	Object exist possibility
RCS	Object radar cross section

To enable the normal working mode of the radar system, the information below is needed from the vehicle:

No.	Signal name	Purpose
1	Vehicle velocity	Determine working mode
2	Wheel speed	Determine working mode
3	Gear	Determine working mode
4	Yaw angle	Determine working mode
5	Steering wheel angle	Determine working mode
6	Turning light status	Function development
7	Distance from radar to vehicle rear	Coordinate system conversion

© Nanjing Chuhang Technology Co., Ltd. 2020. All rights reserved, also regarding any disposal, exploitation, reproduction, editing, distribution, as well as in the event of applications for industrial property rights.

	axle center	

3.1.2 Fault diagnosis

The system works at monitoring status. When a fault is detected, the system will report fault information promptly.

3.2 Application functions

3.2.1 Blind Spot Detection (BSD)

Blind spot detection assistant is an L2 function in automated driving. It is designed to assist the driver in monitoring the traffic situation at the blind spot of vehicle's rear side.

Function description:

When a target vehicle is detected in the rear of subject vehicle, the first-level alarm will be triggered on human-machine interface (i.e., rearview mirror LED light, driver monitoring screen). When a target vehicle is detected in the rear of subject vehicle, and the driver gives a steering command to the same side, the second-level alarm will be triggered on human-machine interface (i.e., rearview mirror LED light, driver monitoring screen). When the target vehicle moves away from or overtakes the vehicle, the alarm will be cleared.

3.2.2 Lane Change Assistant (LCA)

Lane change assistant is an L2 function in automated driving. It is designed to assist the driver in monitoring the traffic situation from the blind spot of vehicle's rear side.

Function description:

When a target vehicle is detected trying to overtake the subject vehicle from the rear side, the first-level function alarm will be triggered on human-machine interface (i.e., rearview mirror LED light, driver monitoring screen). When a target vehicle is detected trying to overtake the subject vehicle from the rear side, and the driver gives the steering command to the same side, the second-level function alarm will be triggered on human-machine interface (i.e., rearview mirror LED light, driver monitoring screen). When the target vehicle moves away from or overtakes the subject vehicle, the alarm will be cleared.

© Nanjing Chuhang Technology Co., Ltd. 2020. All rights reserved, also regarding any disposal, exploitation, reproduction, editing, distribution, as well as in the event of applications for industrial property rights.

3.2.3 Door Opening Warning (DOW)

Door opening warning is an L2 function in automated driving. It is designed to prevent collision with upcoming vehicles from behind, at the time when the driver attempts to open the door.

Function description:

When the subject vehicle is parked and a target vehicle is trying to overtake the subject vehicle from the rear, the first-level alarm will be triggered on the human-machine interface (i.e., LED indicator on rearview mirror, driver monitoring screen). When the subject vehicle is parked, a target vehicle is trying to overtake the subject vehicle from the rear, and the driver of the subject driver is opening the door on the same side, the second-level alarm will be triggered on the human-machine interface (i.e., LED indicator on rearview mirror, driver monitoring screen). When the target vehicle leaves the adjacent lane or overtakes the subject vehicle, the alarm will be cleared.

3.2.4 Rear Cross Traffic Alert (RCTA)/Rear Cross Traffic Assist with Braking (RCTB)

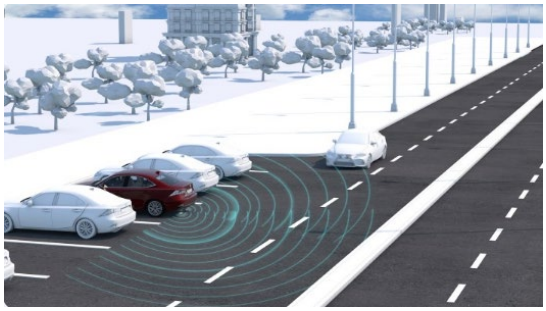

Rear cross traffic alert is an L2 function in automated driving. It is designed to help the driver in monitoring the rear side traffic when reversing. Rear Cross Traffic Brake is an upgraded version of RCTA. It is designed to trigger an emergency braking when detecting potential hazards of collision while the subject vehicle is reversing.

Function description:

When the subject vehicle is reversing, and a target vehicle is approaching from the rear, the alarm will be triggered on the human-machine interface (LED indicator on the rearview mirror, driver's monitor screen). When the target vehicle drives away from the rear of the subject vehicle, the alarm will be cleared.

3.2.5 Traffic Jam Assistance (TJA)

Traffic jam assistance is a system designed to reduce the burden on drivers in the congested road section with radars monitoring moving targets in front of the vehicle, collecting and analyzing

© Nanjing Chuhang Technology Co., Ltd. 2020. All rights reserved, also regarding any disposal, exploitation, reproduction, editing, distribution, as well as in the event of applications for industrial property rights.

target information and delivering accurate target data to the domain controller for decision-making or with master sensor detecting following distance, following speed and braking situation. When the subject vehicle is moving forward at a relatively low speed and comes across a traffic jam, TJA function can be triggered to decide road situations and even take over the vehicle to follow the target vehicle. The TJA function can be turned off at any times by the driver.

3.2.6 High Way Assistant (HWA)

High Way Assistant is a system designed to alleviate driver fatigue in highways and improve general safety with radars monitoring moving targets surrounding the subject lane, collecting and analyzing target information and delivering accurate target data to domain controller for decision-making or with master sensor detecting following distance, following speed, braking and lane changing situations. When the subject vehicle is moving forward at a required speed, HWA function can be triggered to decide road situations and even take over the vehicle to follow the target vehicle or change the lane. The HWA function can be turned off at any times by the driver.

4 Installation specification

4.1 Installation requirements

The installation position of the corner radar is shown in Figure 11 .

© Nanjing Chuhang Technology Co., Ltd. 2020. All rights reserved, also regarding any disposal, exploitation, reproduction, editing, distribution, as well as in the event of applications for industrial property rights.

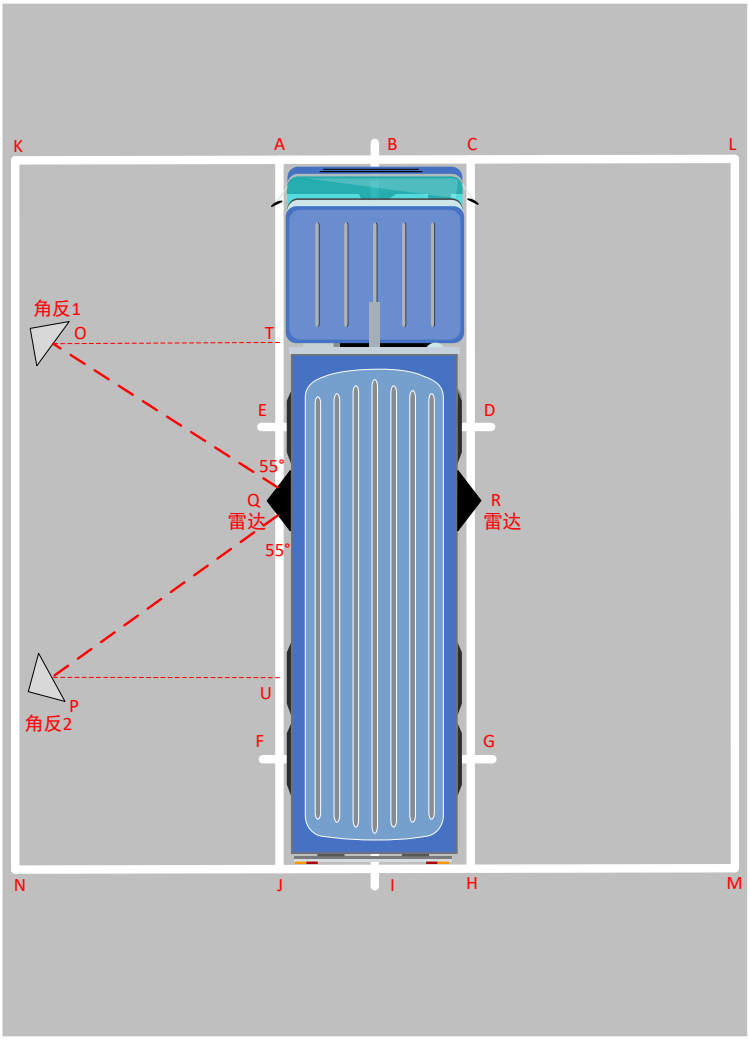

Figure 11 Installation position

Parameter	Specification	Tolerance
Z (Installation height)	40~90 cm (customizable)	±10mm (customizable)
Yaw-F (angle between the normal line of the front corner radar and the driving direction)	0° (customizable)	±3° (customizable)
Yaw-R (angle between the normal line of the rear corner radar and the driving direction)	0° (customizable)	±3° (customizable)
Pitch angle	0°	±1°
Roll angle	0°	±1°

Notes for installation:

1. The radar shall be installed in a relatively spacious area and a specific distance shall be retained between the radar and the bumper;
2. There should not be any metal objects nor protruding mechanical components near the radar

© Nanjing Chuhang Technology Co., Ltd. 2020. All rights reserved, also regarding any disposal, exploitation, reproduction, editing, distribution, as well as in the event of applications for industrial property rights.

to avoid electromagnetic waves reflections;

3. There are no interventions from other sensors and beams.

5 Angular alignment/calibration

5.1 End-of-line calibration

The end-of-line calibration of ARC2.33 radar adopts the static calibration at a specific end-of-line workstation (which can be combined with a similar end-of-line workstation). It is designed to align the radar antenna axis to the driving axis of car, and to eliminate the deviation between the two to an acceptable range in both horizontal and vertical directions via algorithm compensation. See Figure 15 for the recommended workstation setup.

- The applied workstation can be combined with other ones. The recommended setup is shown below;
- Calibration will be activated under the diagnostic mode;
- Calibration can be performed on several kinds of radars and sensors at the same time;
- Calibration processes can be adjusted according to the client's requirements.

© Nanjing Chuhang Technology Co., Ltd. 2020. All rights reserved, also regarding any disposal, exploitation, reproduction, editing, distribution, as well as in the event of applications for industrial property rights.

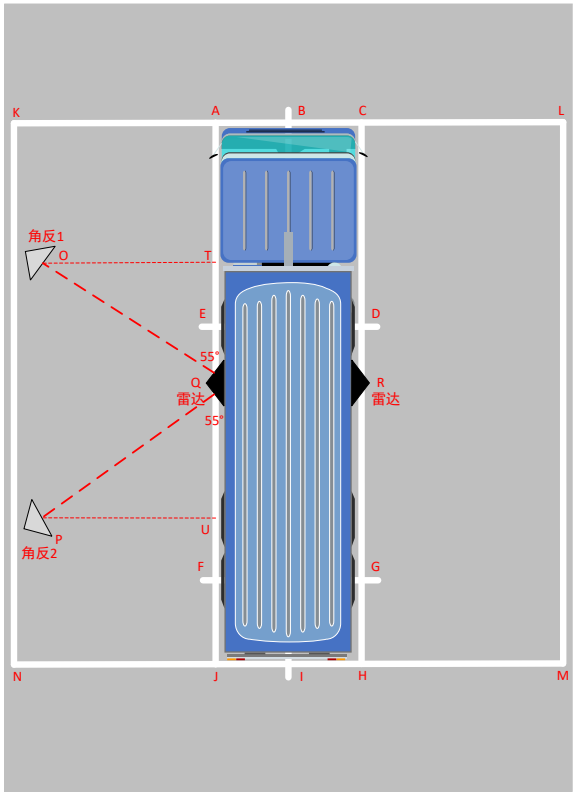

Figure 12 End-of-line calibration

5.2 Post-sales calibration

The post-sales calibration of ARC2.33 radar adopts a dynamic method. The radar measures the deviation between the radar antenna axis and the driving axis of car through environmental detection and self-learning and eliminates the deviation to an acceptable range in both horizontal and vertical directions via algorithm compensation. See Figure 16 for the recommended workstation setup.

Fundamental requirements:

- A straight calibration track with a length of at least 100m and guardrails on one or both sides. If there is no guardrail, put the two corner reflectors at a distance of 3.5m.
- The vehicle runs at a consistent speed above 20km/h, keeping the radar calibration side of the vehicle a distance <2m from the guardrails.
- Calibration mode can be initiated by the diagnostic instrument or IPC (industrial personal computer).

© Nanjing Chuhang Technology Co., Ltd. 2020. All rights reserved, also regarding any disposal, exploitation, reproduction, editing, distribution, as well as in the event of applications for industrial property rights.

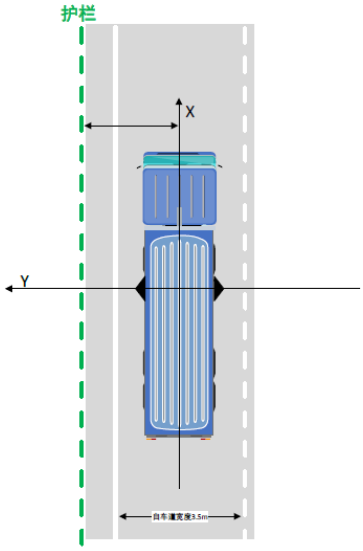

Figure 13 post-sales alignment

6 Design verification

6.1 Design standards

Standard number	Title of standard
GB/T 28046.1-2011	Road vehicles - Environmental conditions and testing for electrical and electric equipment - Part 1: General
GB/T 28046.2-2011	Road vehicles - Environmental conditions and testing for electrical and electric equipment - Part 2: Electrical loads
GB/T 28046.3-2011	Road vehicles - Environmental conditions and testing for electrical and electric equipment - Part 3: Mechanical loads
GB/T 28046.4-2011	Road vehicles - Environmental conditions and testing for electrical and electric equipment - Part 4: Climatic loads
GB/T 28046.5-2013	Road vehicles - Environmental conditions and testing for electrical and electric equipment - Part 5: Chemical loads
GB/T 1865-2009	Paints and varnishes - Artificial weathering and exposure to artificial radiation - Exposure to filtered xenon-arc radiation
GB/T 2423.1-2008	Environmental testing for electric and electronic products - Part 2: Test methods - Tests A: Cold
GB/T 2423.2-2008	Environmental testing for electric and electronic products - Part 2: Test methods - Tests B: Dry heat
GB/T 2423.4-2008	Environmental testing for electric and electronic products - Part 2: Test methods - Test Db: Damp heat, Cyclic (12h+12h cycle)

© Nanjing Chuhang Technology Co., Ltd. 2020. All rights reserved, also regarding any disposal, exploitation, reproduction, editing, distribution, as well as in the event of applications for industrial property rights.

Standard number	Title of standard
GB/T 2423.18-2012	Environmental testing for electric and electronic products - Part 2: Test methods - Test Kb: Salt mist, Cyclic (sodium chloride solution)
GB/T 2423.22-2012	Environmental testing for electric and electronic products - Part 2: Test methods - Test N: Change of temperature
GB/T 30038-2013	Road vehicles - Degrees of electrical equipment protection (IP-Code)
Q-JLY-J7110195D-2017	Technical specification for harness connector of vehicle
GB/T 21437.2-2008	Road vehicles - Electrical disturbances from conduction and coupling - Part 2: Electrical transient conduction along supply lines only
GB/T 19951-2017	Road vehicles - Test methods for electrical disturbances from electrostatic discharge
GB/T 18655-2010	Vehicles boats and internal combustion engines - Radio disturbance characteristics - Limits and methods of measurement for the protection of on-board receivers
SMTC 3800006-2015	General test specification for electrical/electronic components and subsystems, electromagnetic compatibility (Electrical transient conduction along supply lines)
GB/T 21437.3-2012	Road vehicles - Electrical disturbances from conduction and coupling - Part 3: Electrical transient transmission by capacitive and inductive coupling via lines other than supply lines
CEVT	EMC Specification (BCI and RI)
ISO 15623	Intelligent transport systems. Forward vehicle collision warning systems (FVCWS)
NHTSA_26555	Forward collision warning system confirmation test
GB_T33577-2017	Intelligent transportation systems—Forward vehicle collision warning systems—Performance requirements and test procedures
JT_T 883-2014	Commercial vehicle driving dangerous warning system technical requirements and test procedures

© Nanjing Chuhang Technology Co., Ltd. 2020. All rights reserved, also regarding any disposal, exploitation, reproduction, editing, distribution, as well as in the event of applications for industrial property rights.

6.2 DV test verification

The ARC2.33 products have passed the DV tests according to the above standards.

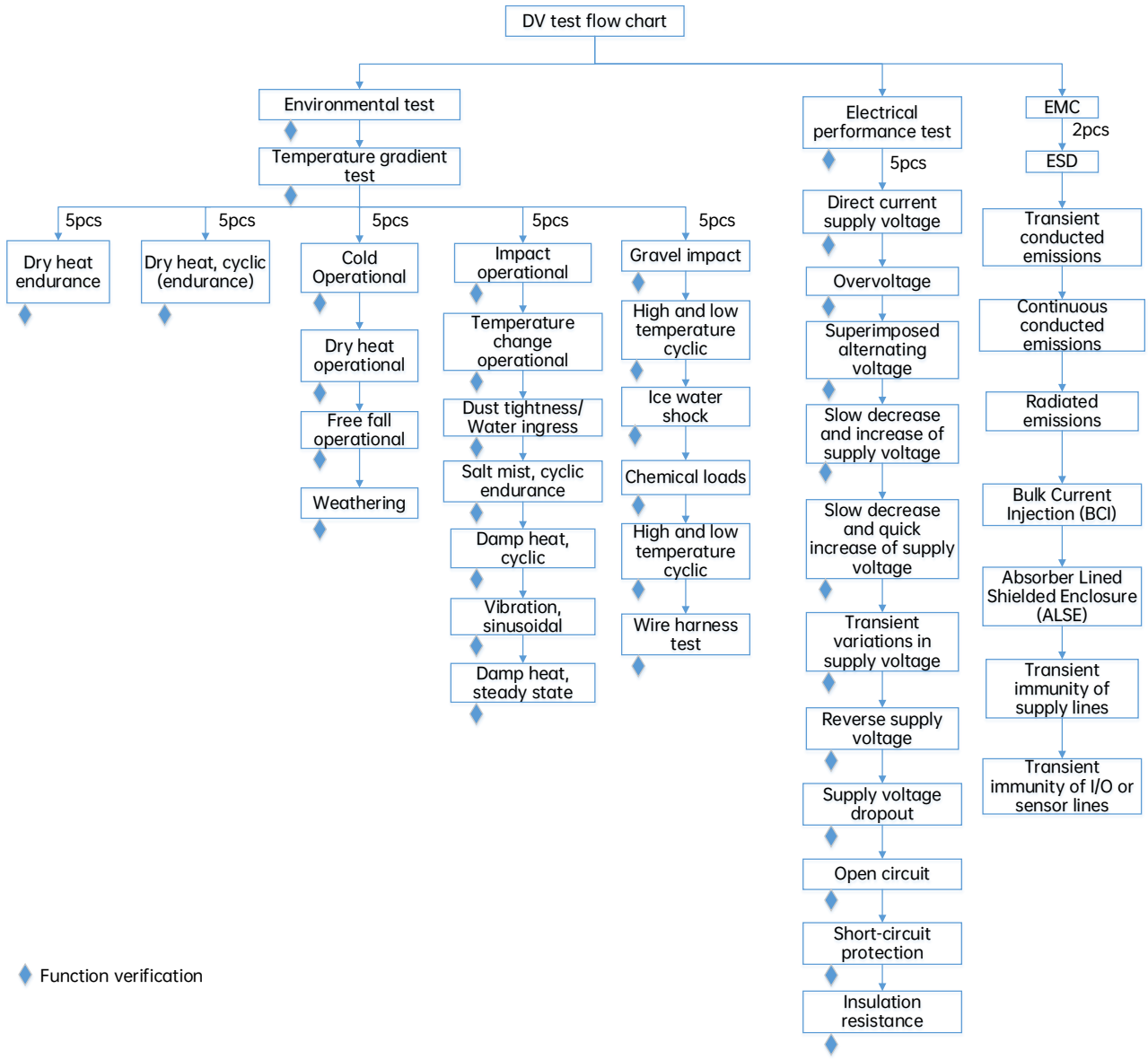

— End —

© Nanjing Chuhang Technology Co., Ltd. 2020. All rights reserved, also regarding any disposal, exploitation, reproduction, editing, distribution, as well as in the event of applications for industrial property rights.