ACMETHINK

PURE SOUND 60W

Wireless Bluetooth SoundBar 2.0

user's manual

Important safety instructions

Warning: To reduce the risk of electric shock, do not disassemble the product and do not expose the product to rain or humidity. Non-professionals, do not try to modify or repair this machine.

1. Please open the instruction manual carefully before use, and keep all the instructions for future reference.
2Always use the same electrical house, frequency, as indicated on the rating label.
3 This product is suitable for indoor and home use.
4. Prevent electric shock: do not immerse the device, plug or wire in water or spray it with conductive liquid;Do not place the device in the window or other possible places exposed to dripping or splashing water;Do not place vases or objects filled with liquid frequently near the equipment.
5.Do not use this product near water, such as bathtubs, wash basins, swimming pools, etc. Avoid the possibility of immersion or splashing.
6 The equipment should be far away from cooking sources, such as cookers, heat regulators, stoves or other products that generate heat.No open flame sources such as wax baking should be placed on the device.
7Only use with accessories specified by the manufacturer.
8 This product is not suitable for people (including children) with the following physical, sensory or mental abilities, or lack of experience and knowledge, unless the person responsible for their safety supervises or guides the use of the equipment.
9.This product is not a toy! Children should be supervised to ensure that they do not play with electrical appliances.
10 During use, do not have any objects covering the ventilation holes, preventing the product from being scattered, such as anti-deer Cloth, window curtains or similar items.
11. Do not operate the product when the power cord or plug is damaged, or if the product fails, Drop or damage soil in any way.
12 If the power cord is damaged, it must be replaced by the manufacturer or its service agent to avoid danger.
13. For safety reasons, do not remove any covers or screws to try to get inside the product.
14. Do not use any harsh chemicals to clean the equipment, otherwise it may damage the soil surface. Generally speakingWipe clean with a dry cloth.
15 When unplugging the power plug from the Jingshang socket, be sure to unplug the plug directly; never unplug the power cord.
16 Do not expose the battery to overripe, direct light, flame or similar conditions.

Remote control instructions

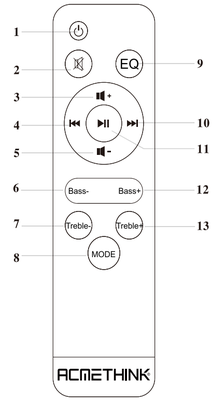

1. Power On/Standby Mode
2. Mute
3. Volume +
4. Play Previous Song
5. Volume-
6. Reduce Bass
7. Reduce Treble
8. Mode Switch (Bluetooth/HDMI ARC /Optical/AUX/USB) USB Mode: Can only be switched when USB is plugged in
9. Sound EQ Effect Switch (Music EQ Effect, Movie EQ Effect, News EQ Effect)
10. Next
11. Play/Pause
12. Increase Bass
13. Increase Treble

Buttons and Ports introduction

Right side buttons

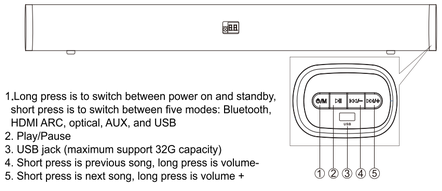

1.Long press is to switch between power on and standby, short press is to switch between five modes: Bluetooth, HDMI ARC, optical, AUX, and USB
2. Play/Pause
3. USB jack (maximum support 32G capacity)
4. Short press is previous song, long press is volume-
5. Short press is next song, long press is volume +

Back side Ports

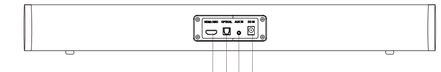

1,HDMI ARC INPUT PORT
2,OPTICAL INPUT PORT
3, AUX INPUT PORT
4,18V/2A POWER INPUT Port

NCC warnings:
For low-power radio frequency devices that have been certified by Honey, companies, firms, or users are not allowed to change the frequency, increase the power, or change the characteristics and functions of the original design without approval.
The use of low-power radio frequency equipment shall not affect the safety of transportation and interfere with legal communications; if interference is found, it should be stopped immediately and improved to no interference before continuing to use it.
The aforementioned legal communications refer to radio communications operated in accordance with the provisions of the Telecommunications Administration Law.
Low-power radio frequency equipment must endure interference from legal communications or industrial, scientific and medical radio wave radiating electrical equipment

CONNECTION

Connect Soundbar and TV by HDMI

1. Power connection: Plug the DC connector of power adaper into the Sound power port, and then plug AC adapter into the power socket
2. Connect TV: HDMI Cable one side connect Soundbar HDMI ARC Port ,
One side connect TV HDMI ARC Port .

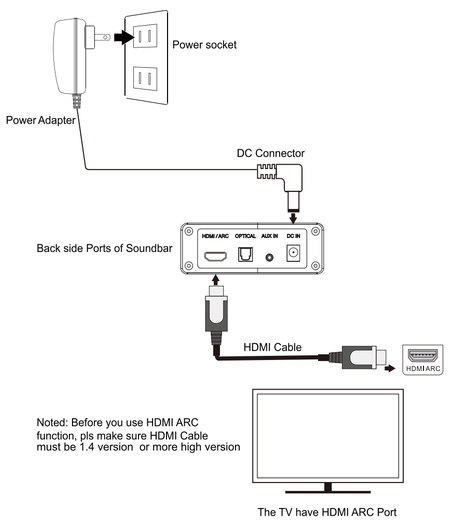

Connect SoundBar more way

3.Optical: Connect the soundbar with other devices (Blu-ray/DVD players/players) by Optical Cable, and the audio source will enter the soundbar
4.Other audio sources: Bluetooth/AUX audio source into SoundBar

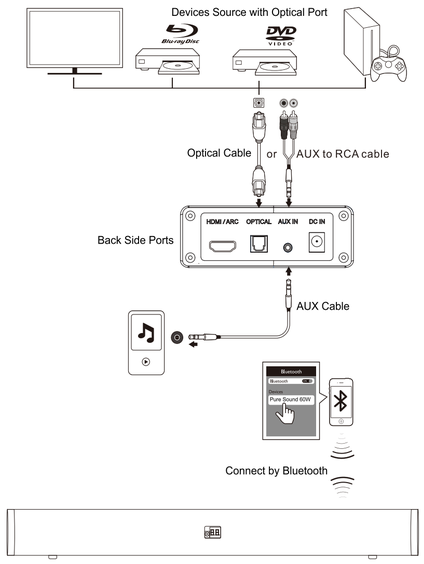

Instructions
1.Plug in the power adapter: The Soundbar will be in a standby mode, and the indicator light on the front display show
2.Power On/Standby: Long press the "Power On/Standby" button on the right side or Press the Power on/standby button on the remote control. it is preset to Bluetooth mode When there is no external cable connected.

Bluetooth mode
1.Press the "Mode" button repeatedly until the Bluetooth mode is selected.
2.On the device that supports Bluetooth, select "Pure Sound 60W", which is the name of Soundbar. At this time, the digital screen is flashing, indicating that it is pairing, and there is a beeping sound Once the pairing is successful, the digital screen stops flashing. 3.Now, you can play music from devices that support Bluetooth on your phone.
Press the "Previous"/"Next" button on the remote control to play the previous or next song.

Optical/AUX mode
1. Connect devices with Soundbar by Optical Cable or AUX Cable .
2. Press the mode button repeatedly until the Optical/AUX mode is selected.
Now, you can use the connected device to play music.

HDIM mode
1.Connect the Soundbar with TV or other HDMI ARC port devices by HDMI Cable
2.Press the button" " on the Soundbar or "MODE" button on the remote to HDMI mode and turn on the TV. The audio mode is set to HDMI ARC.
Now, you can enjoy the sound from TV or other HDMI ARC Devices

USB mode
After Soundbar Power on , plug in the USB, it will automatically switch to USB mode and play music. If you have plugged in the USB before power on , you need to press the" " button on the Soundbar or the "MODE" button on the remote to switch to USB model.

Modes display on Digital screen

Standby Mode	--	USB Mode	U
AUX Mode	AU	HDMI ARC Mode	Ar
Bluetooth Mode	bt	Bass Adjust	bA
Optical Mode	OP	Treble Adjust	tr

Wireless Bluetooth SoundBar 2.0 specifications

Put SoundBar and TV together

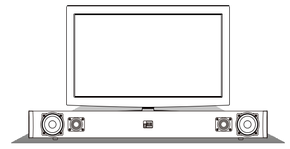

Support mode	Bluetooth/HDMI ARC/optical /AUX /USB (maximum support 32G)
Power 60W	60W
Display	8 digital screens
Loud speaker	full frequency 30Wx2 at 2.25
Bluetooth version	5.0
Bluetooth distance	10 meters
Input voltage	18V
Input current	2A
Frequency range	20Hz~20KHz ?2dB
Signal to noise ratio	>75dB
Resolution	>40dB
Remote distance	7 meters
Product size	W610XD96XH66mm
Color box size	W709XD103XH140mm
Accessories	Remote control, AUX cable, Power adapter , manual, Optical cable , AUX to RCA cable

FCC Warning Statement

Changes or modifications not expressly approved by the party responsible for compliance could void the user's authority to operate the equipment. This equipment has been tested and found to comply with the limits for a Class B digital device, pursuant to Part 15 of the FCC Rules. These limits are designed to provide reasonable protection against harmful interference in a residential installation. This equipment generates uses and can radiate radio frequency energy and, if not installed and used in accordance with the instructions, may cause harmful interference to radio communications. However, there is no guarantee that interference will not occur in a particular installation. If this equipment does cause harmful interference to radio or television reception, which can be determined by turning the equipment off and on, the user is encouraged to try to correct the interference by one or more of the following measures:

- Reorient or relocate the receiving antenna.
- Increase the separation between the equipment and receiver.
- Connect the equipment into an outlet on a circuit different from that to which the receiver is connected.
- Consult the dealer or an experienced radio/TV technician for help.

This device complies with part 15 of the FCC Rules. Operation is subject to the following two conditions: (1) This device may not cause harmful interference, and (2) this device must accept any interference received, including interference that may cause undesired operation.

RF Exposure Statement

To maintain compliance with FCC's RF Exposure guidelines, This equipment should be installed and operated with minimum distance of 20cm the radiator your body. This device and its antenna(s) must not be co-located or operation in conjunction with any other antenna or transmitter.