User's Manual

Version 1.0 CN

Scan the code to watch the operation video

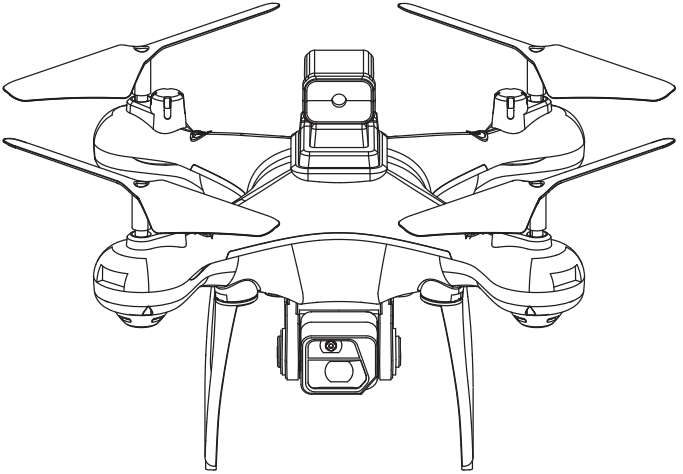

Because it takes a certain amount of skill to control it well, you need to be careful when using the toy ,
Flying and avoiding collisions with users, objects or third parties;

- Do not touch the spinning fan blades, avoid loose clothing or hair that could get caught in the rotors, and do not fly close to your face ;
- Adults are advised to teach children how to fly and control toys safely ;
- Conditions to be observed when using the toy (e.g., absence of obstacles and people within the required indoor or outdoor flight room/area flight range to keep the toy in sight and to maximize operating distance);
- Please keep the instructions for use in a safe place for future reference.

Foldable wings

No obstacle avoidance function in high speed gear.

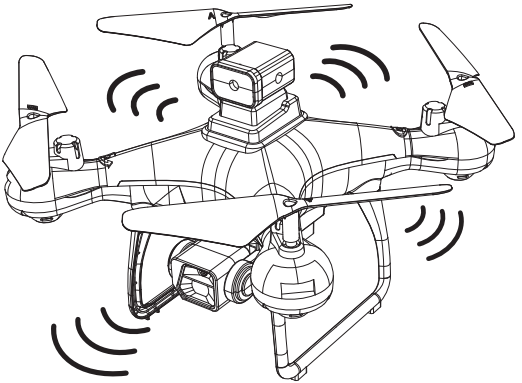

Please install the protective frame first to protect the motor and prevent accidental injury to others

Replacement of air blades and installation of kickstand and protection ring

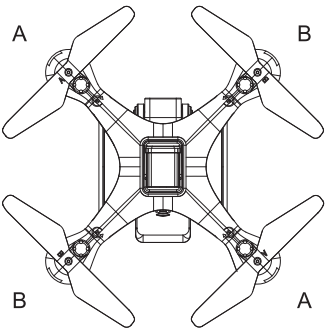

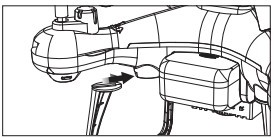

Tripod Mounting

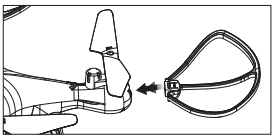

Protective ring mounting

Please install the protective frame first to protect the motor and prevent accidental injury to others

Remote control function description

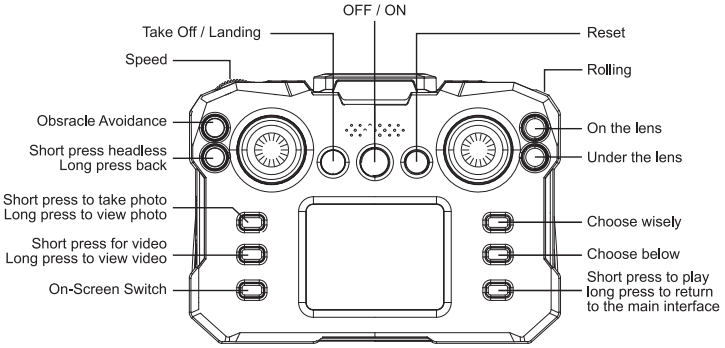

⚠ Note: insert the memory card before you can take photos/videos.

Installation of aircraft batteries and remote control batteries

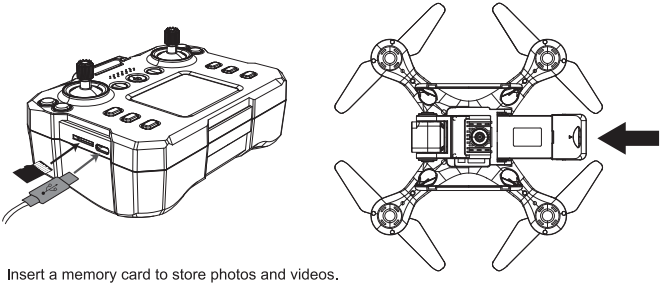

Insert a memory card to store photos and videos.
At the end of the flight, use the equipped card reader to read the content captured by the memory card on your computer.

Remote Control Charging

1. Insert the charging cable into the charging port.
2. Insert the other end of the USB charging cable into the USB port of the computer, the red light at the charging port of the remote control will light up on behalf of the start of charging, and the light will go out when it is full.

Lithium Battery Charging

1. remove the battery from the craft;
2. Insert the battery into the USB charging cable;
3. Insert the other end of the USB charging cable into the USB port of the computer, and the red light of the USB charging cable will be on, which means charging will start.

Tips: When the battery is full, please remove the battery from the USB charging cable in time.
When the red light is on, charging status
When the red light is off, full charging status

Introduction to Fixed Height Function

Use the left joystick to push and pull up and down to make the craft rise or fall, and release the joystick when it rises to a certain height or falls to a certain height, which will keep the craft at the current height.

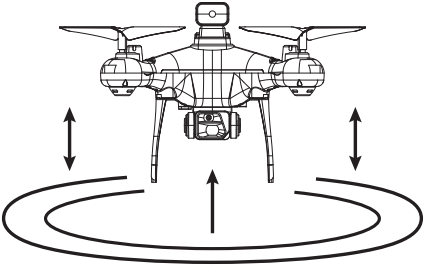

Note: When the aircraft comes to a stop, the first push of the throttle joystick will only start the engine, but the aircraft will not leave the ground. It is only on the second push of the throttle joystick that the aircraft will take off from the ground.

Take off Procedures

1. Ensure that the battery on the aircraft is fully charged;
2. After inserting the battery into the aircraft, press the power button on the top; the blue light flashing indicates a normal connection. Place the aircraft on a level surface; if the indicator light on the aircraft is flashing, it means the aircraft is in pairing mode;
3. After inserting the battery into the remote control, press the power button; the blue light flashing indicates that it is in pairing mode;
4. Once the switches on the remote control and the drone are turned on, they will automatically pair. If the blue light on the aircraft stays on, it indicates that pairing is complete.
5. Now you can push the throttle stick to control the flight of the aircraft.

Aircraft Direction Control

Take off / Landing

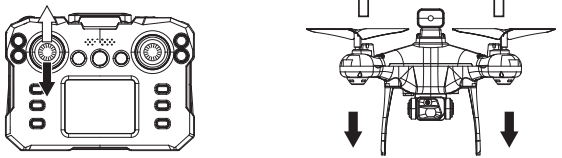

Forward / Backward

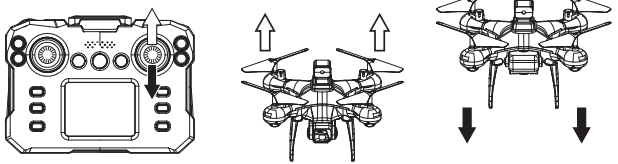

Left / Right Rotation

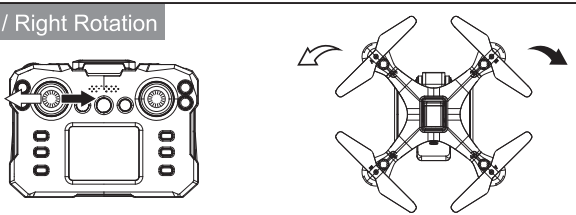

Left / Right Fly

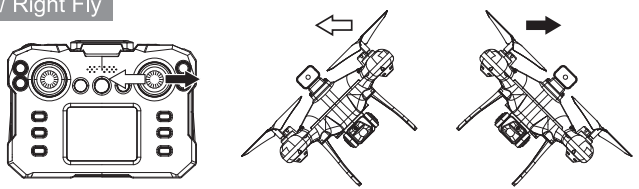

Level Calibration

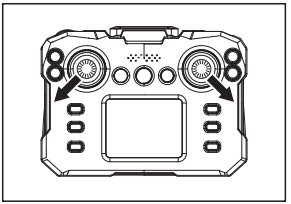

When the aircraft consistently drifts in a certain direction or rotates in place while in the air, the horizontal calibration function can be used to calibrate the aircraft. Place the aircraft on a level surface and push the throttle stick and direction stick on the remote control outward in an eight-direction pattern (as shown in the left image). The remote control will emit a "beep" sound, and the aircraft's blue light will flash for about 2 seconds. The aircraft's blue light will then remain on, indicating that the calibration is complete.

3D Rolling

The aircraft can perform special maneuvers in mid-air, first flying to a height of about 2-3 meters (if playing indoors, ensure there is enough distance from the ceiling to avoid danger). Press the button on the right side of the remote control, and the remote will emit a “beep beep beep” sound. At this point, simply push the joystick on the remote control, and the aircraft will roll in the direction the joystick is pushed.

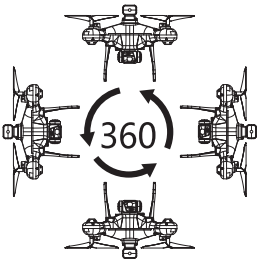

3D rolling performs better when the battery is fully charged; please do not use rolling in low voltage situations.

Headless Mode

When entering headless mode, regardless of how the aircraft rotates, as long as the joystick on the remote control is pushed in the forward direction, the aircraft will fly in the originally set forward direction.

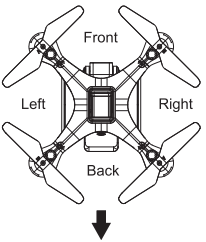

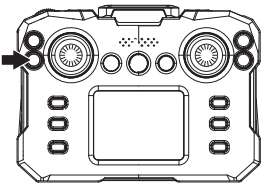

Before entering headless mode, it is necessary to determine the direction in which the nose of the aircraft is heading, that is, the direction of the nose on the ground after the aircraft is powered on.

Low Pressure Protection

When the aircraft is flying in the air, if all indicator lights are flashing, it indicates that the battery level is low, prompting an urgent return operation.
Slow flashing: Battery level is low

⚠ When the low-pressure warning appears, the rolling function cannot be used.

One key take off/landing

One key Take off:

Place the aircraft on a level surface and press the "one key take off" button on the remote control. At this point, the aircraft will automatically ascend to a height of 1.5 meters.

One key Landing:

When the aircraft is hovering in the air, pressing the remote control's "one key landing" button will cause the aircraft to automatically descend to the ground.

Obstacle Avoidance Function

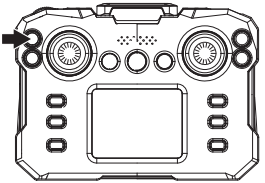

Short press the obstacle avoidance button to turn the obstacle avoidance function on or off.

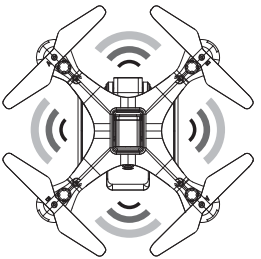

Lens Adjustment

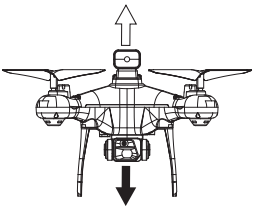

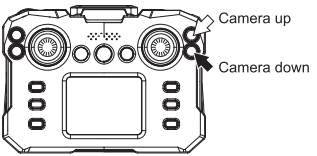

Accessory Manufacturer: SHANTOU XINKAIYANG TOYS TECHNOLOGY CO.,LTD

Address of Manufacturer: South side of Yingbin North Road, Nanshe Village, Waisha Town, Longhu District, Shantou City, Guangdong Province, China

Operation Temperature 0°C ~ 45 °C
Storage Temperature - 10 °C ~ 45 °C

We declares that this device is in compliance with the essential repuirements and other relevant provisions of Directive 2014/53/EU.
CAUTION: RISK OF EXPLOSION IF BATTERY IS REPLACED BY AN INCORRECT TYPE. DISPOSE OF USED BATTERIES ACCORDING TO THE INSTRUCTIONS.
Operation Frequency: 2415-2475MHz

Model：KY102

Remote control aircraft series

SHANTOU XINKAIYANG TOYS TECHNOLOGY CO.,LTD

South side of Yingbin North Road, Nanshe Village, Waisha Town, Longhu District, Shantou City, Guangdong Province, China

CE

FCC Statement

This equipment has been tested and found to comply with the limits for a Class B digital device, pursuant to Part 15 of the FCC Rules. These limits are designed to provide reasonable protection against harmful interference in a residential installation. This equipment generates uses and can radiate radio frequency energy and, if not installed and used in accordance with the instructions, may cause harmful interference to radio communications. However, there is no guarantee that interference will not occur in a particular installation. If this equipment does cause harmful interference to radio or television reception, which can be determined by turning the equipment off and on, the user is encouraged to try to correct the interference by one or more of the following measures:

-- Reorient or relocate the receiving antenna.

-- Increase the separation between the equipment and receiver.

-- Connect the equipment into an outlet on a circuit different from that to which the receiver is connected.

-- Consult the dealer or an experienced radio/TV technician for help.

This device complies with part 15 of the FCC Rules. Operation is subject to the following two conditions:

(1) This device may not cause harmful interference, and (2) this device must accept any interference received, including interference that may cause undesired operation.

Changes or modifications not expressly approved by the party responsible for compliance could void the user's authority to operate the equipment.