Instructions for Use

Wireless Charger

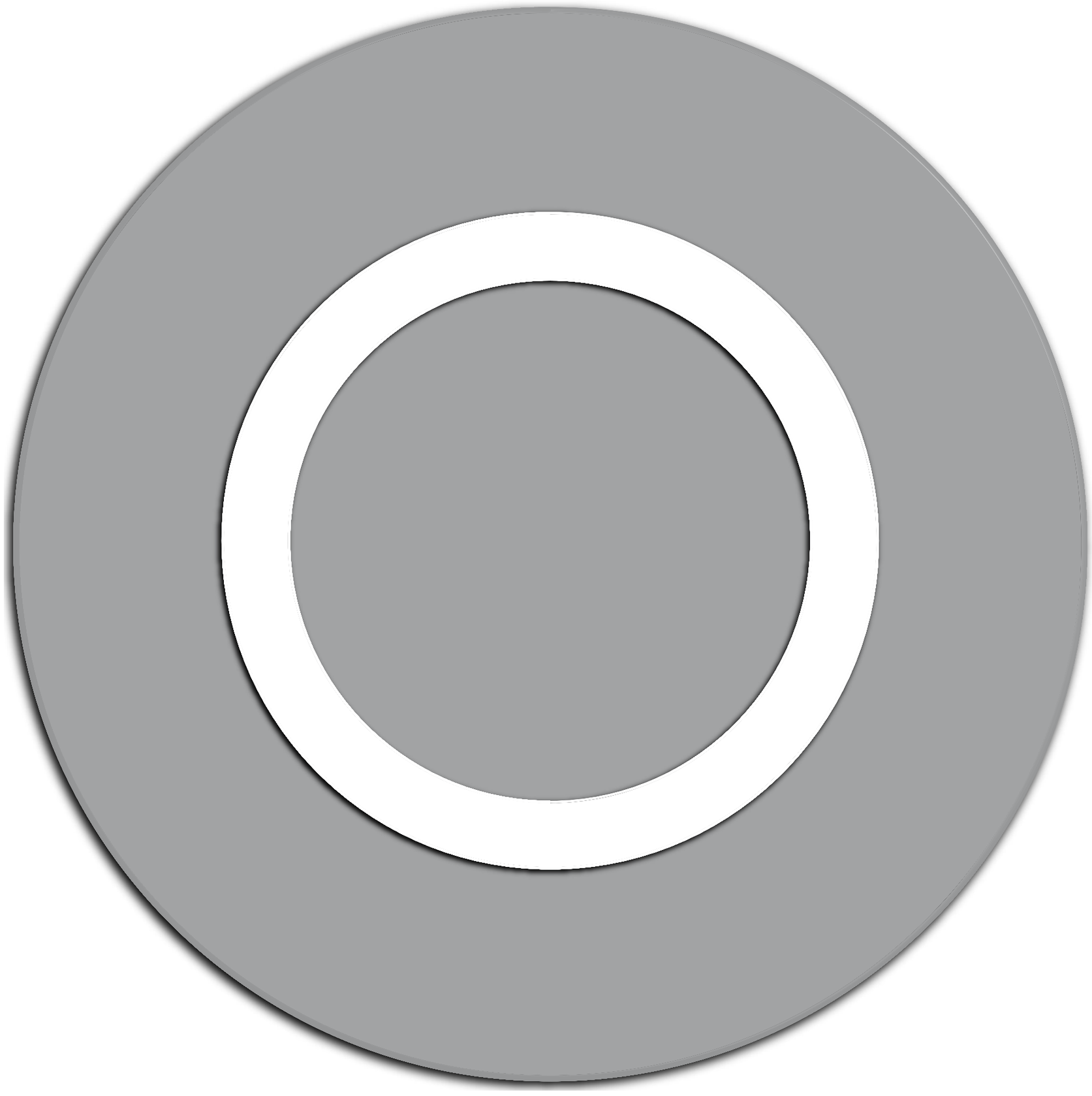

Content

1. General 4
2. Intended Use 4
3. Delivery Scope 4
4. Important Safety Instructions 4
5. Start-up 6
6. Technical Data 8
7. Exclusion of Liability 9
8. Warranty 9
9. Declaration of Conformity 9
10. Used Symbols and Icons 10

1. General

The Wireless Charger is an inductive charging station. Please read the instructions carefully before use.

2. Intended Use

This product is intended for wireless charging.

3. Delivery Scope

- Wireless Charger
- USB cable
- Instructions for Use (digital)

4. Important Safety Instructions

1. Do not use the wireless charger for anything other than its intended use.
2. Do not use the wireless charger if it has visible damages, in very hot, humid or corrosive environments to avoid circuit damage and leakage. It should only be stored and transported under the conditions defined in these instructions.
3. Do not immerse in liquids and do not handle the wireless charger, USB cable or power adapter with wet hands.
4. Place the wireless charger on a sturdy and flat surface during charging.
5. Do not place too close to magnetic stripe or chip cards (ID cards, bank cards, etc.) to avoid magnetic defects.
6. Please keep a distance of at least 20 cm between implantable medical devices (pacemaker, implantable cochlear device, etc.) and the wireless

charger to avoid possible interference with the medical device. Consult a physician before using the wireless charger.

7. Keep the wireless charger out of the reach of children.
8. The wireless charger is designed for indoor use only.
9. To protect the wireless charger against contamination and damage keep it closed and away from children, dust, sunlight, moisture, pets and vermin.
10. Please do not use water or chemical substances to clean the wireless charger. Please only use a dry cloth.
11. It is normal for the wireless charger to generate heat during use. Do not cover it with other objects during use.
12. The power socket must be next to the wireless charger and easily accessible. When you position the device, pay attention that nobody steps on the cable or trips over it. Do not put objects on the cable.
13. Do not open the wireless charger. Doing so may result in a life-threatening electric shock. It does not contain any parts that require maintenance.
14. In the case of a defect please contact your local distributor. Any attempt to repair the device will void the warranty.

5. Start-up

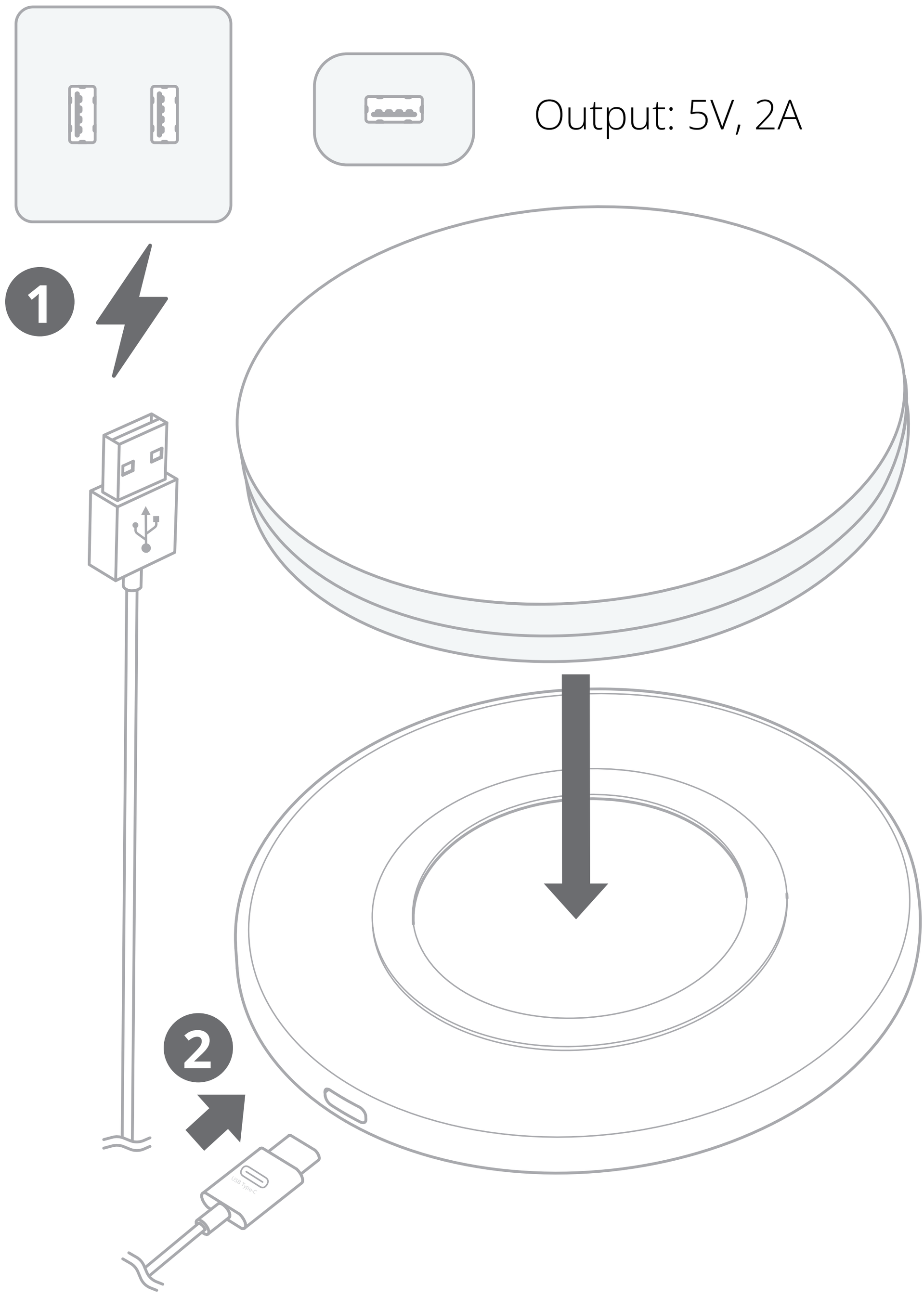

1. Connect the power adapter to a power socket. The green indicator on the side of the wireless charger will glow solid green to indicate that a power connection is established.
2. Connect USB-A end of the supplied cable to a power adapter with at least 2 A output.

3. Connect USB-C end of the cable to the wireless charger.
4. When power is supplied to the wireless charger, the LED will turn on.

Note: Please make sure that you use a power adapter with an output of 9V DC @ 1.8A or 5V DC @ 2A. The power adapter is not part of the scope of delivery.

1

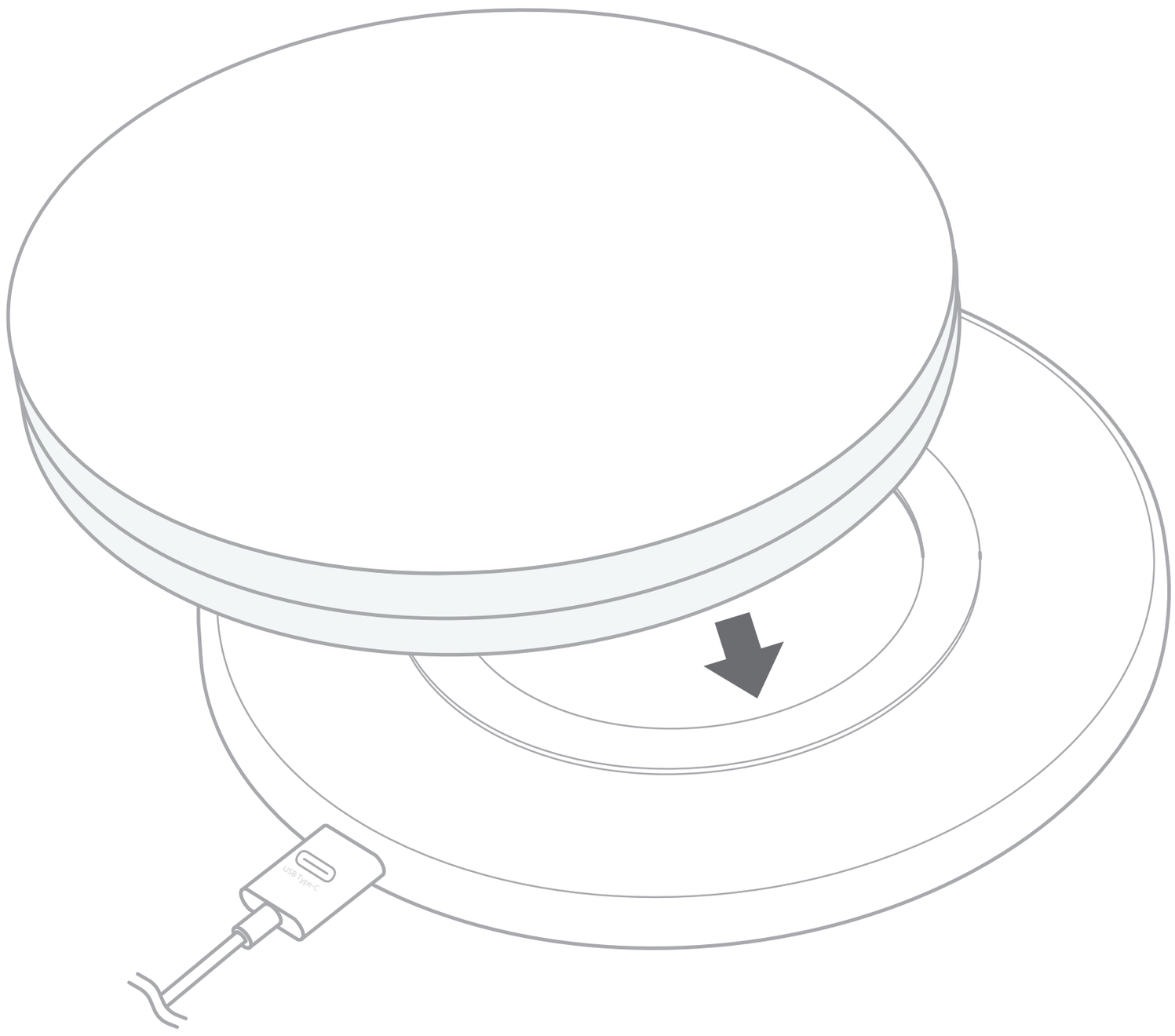

2

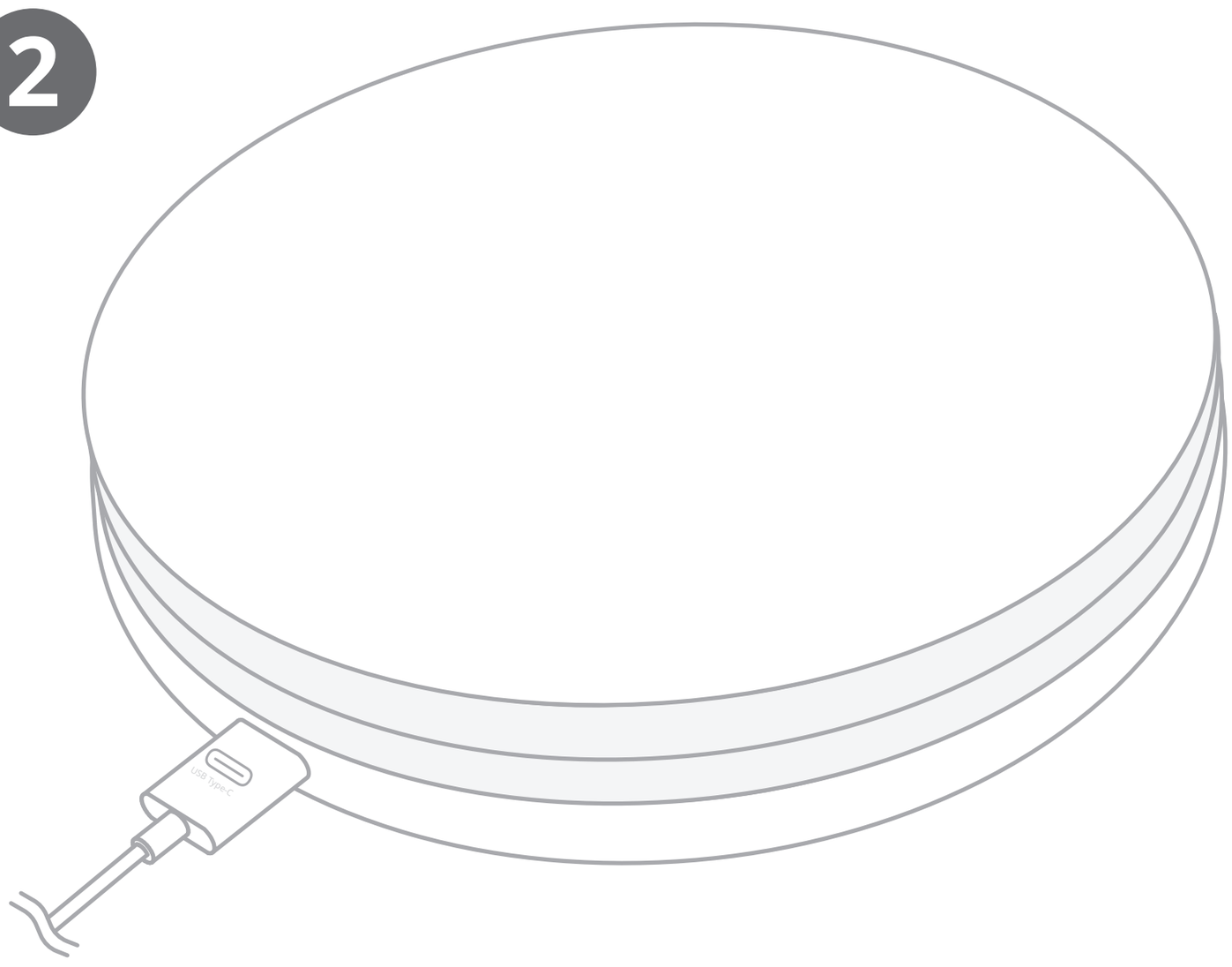

1. Place the device centered on top of the wireless charger
2. When the LED of the wireless charger turns off, charging is in progress.

Note: If the LED of the wireless charger flashes, an error has occurred. In this case, please remove all objects from the wireless charger and place the device on the wireless charger again.

Attention

- Make sure that the wireless charger is connected to a working power socket.
- Make sure that you use a power adapter with an output of 9V DC @ 1.8A or 5V DC @ 2A.
- Make sure that the device is in the center of the wireless charger.
- Make sure that there are no other objects on the wireless charger.
- Make sure to unplug the wireless charger from the power supply when not in use.

6. Technical Data

Product name	Wireless Charger
Model	HW01
Input port	USB Type-C
Input	DC 9 V 1.8 A, 5 V 2 A
Output	5 V – 5 W max. / 9 V – 10 W max.
Frequency band	147.2kHz
Dimensions (diameter/height)	116 mm / 6.3 mm
Charging distance	≤ 10 mm
Power conversion	≥ 75%

Status display	LED
Temperature range	0°C to 35°C / 32°F to 95°F
Relative humidity	15 % to 85 %
IP classification	42

7. Exclusion of Liability

The firmware and/or hardware may be changed at any time without prior notice. For this reason, it is possible that parts of these instructions, technical data and images in this documentation differ slightly from the product in your possession. All points described in these instructions only serve the purpose of clarification and must not inevitably correspond to a certain situation. No legal claims can be derived from these instructions.

8. Warranty

The wireless charger has a 2-year warranty. The warranty applies only to material and production defects.

Please understand that we cannot provide warranty service in the following cases:

- Non-compliance with the instructions for use
- Abusive or improper handling, installation or use
- Damage, scratches or wear
- Unauthorized modifications, opening of the housing, modifications or repairs
- Damage caused by other devices, force majeure or transport

9. Declaration of Conformity

www.healyworld.net/doc/declaration/hw01

10. Used Symbols and Icons

CE	In conformity with European legislation
	Electronic waste – do not dispose. Recycle acc. to local regulations or contact your authorized dealer or the manufacturer.
FC	US Federal Communications Commission Certification
	Recycling
RoHS	Compliance with the Directive on the restriction of the use of certain hazardous substances in electrical and electronic equipment
	NCC Certification Taiwan for radio technologies
	Korean product certification
	MIC Certification: Radio product market approval in Japan
NOM NYCE	NOM: Norma Official Mexicana certification for Mexico NYCE: Normalización y Certificación Electrónica for Mexico
R-NZ	RCM: Australian Regulatory Compliance Mark (RCM). R-NZ: New Zealand-compliance mark for radio products
	Follow the instructions for use

EAC	The Eurasian Conformity mark (Armenia, Belarus, Kazakhstan, Kyrgyzstan, Russia)
	Ukrainian conformity mark
MCMC	Malaysian Communications and Multimedia Commission Type approval for fixed line and wireless telecommunications products
	Use only inside

© 2022 Shenzehn Input Technology Co. Ltd. All rights reserved.

Shenzehn Input Technology Co. Ltd.
2F Building 1, Bantian
518112 Shenzhen, PR China

FCC Warning Statement: Changes or modifications to this unit not expressly approved by the party responsible for compliance could void the user's authority to operate the equipment. This equipment has been tested and found to comply with the limits for a Class B digital device, pursuant to Part 15 of the FCC Rules. These limits are designed to provide reasonable protection against harmful interference in a residential installation. This equipment generates, uses and can radiate radio frequency energy and, if not installed and used in accordance with the instructions, may cause harmful interference to radio communications. However, there is no guarantee that interference will not occur in a particular installation. If this equipment does cause harmful interference to radio or television reception, which can be determined by turning the equipment off and on, the user is encouraged to try to correct the interference by one or more of the following measures:

- **Reorient or relocate the receiving antenna.**
- **Increase the separation between the equipment and receiver.**
- **Connect the equipment into an outlet on a circuit different from that to which the receiver is connected.**
- **Consult the dealer or an experienced radio/TV technician for help.**

This device complies with Part 15 of the FCC Rules. Operation is subject to the following two conditions: (1) this device may not cause harmful interference, and (2) this device must accept any interference received, including interference that may cause undesired operation.

FCC Radiation Exposure Statement

The antennas used for this transmitter must be installed to provide a separation distance of at least 20 cm from all persons and must not be co‐located for operating in conjunction with any other antenna or transmitter.