# Landscape Pro Slim Electric Fireplace

**Model# LPS-4414V2 LPS-5614V2 LPS-6814V2**
**LPS-8014V2 LPS-9614V2**

## OWNERS MANUAL

V2

MODERN FLAMES

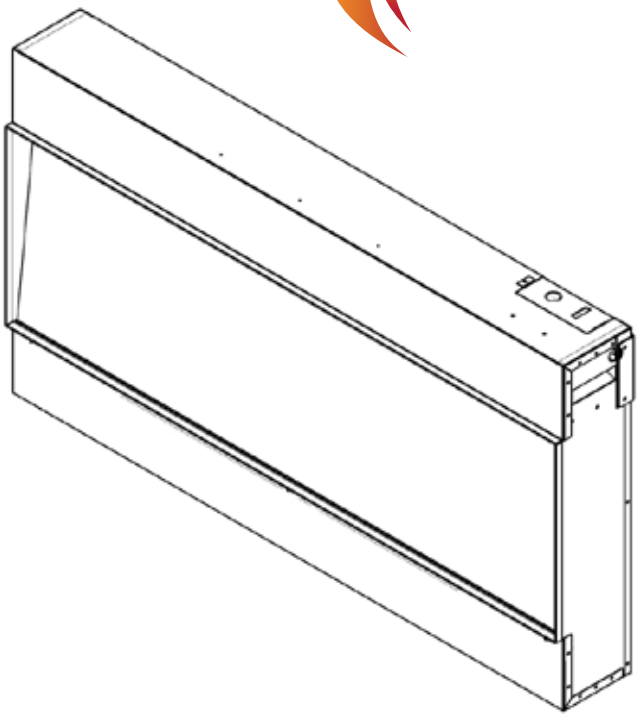

**Rated: 120VAC 60Hz 5,000 BTUs**

| | |
|---|---|
| **WARNING** | **Read and understand** this entire owner's manual, including **all safety information**, before plugging in or using this product. Failure to do so could result in **fire, electric shock, or serious personal injury**. |

| | |
|---|---|
| **CAUTION** | **Keep this owner's manual** for future reference. If you sell or give this product away, **make sure this manual accompanies this product.** |

AFFIX SERIAL NUMBER LABEL
HERE FOR FUTURE REFERENCE

C ETL US LISTED
5023705

07-00012 REV A

# IMPORTANT SAFETY INFORMATION!

## WARNING

When using electrical appliances, basic precautions should always be followed to reduce the risk of fire, electric shock, and injury to persons, including the following:

1. Read all Instructions before installing or using the heater.
2. This heater is hot when in use. To avoid burns, do not let bare skin touch hot surfaces. Keep combustible materials, such as furniture, pillows, bedding, papers, clothes, etc. and curtains at l east 3 feet (0.9 m) from the front of the heater and keep them away from the sides and rear (sides and rear restrictions apply to location dedicated heaters only)
3. Extreme caution is necessary when any heater is used by or near children or invalids and whenever the heater is left operating and unattended.
4. Do not operate heater after it malfunctions. Disconnect power at service panel and have the heater inspected by a reputable electrician before reusing.
5. Do not use outdoors. (Omitted if the heater is intended for outdoor use.)
6. To disconnect heater, turn controls to off, and turn power to heater circuit at main disconnect panel (or operate internal disconnect switch if provided).
7. Do not insert or allow foreign objects to enter any ventilation or exhaust opening as this may cause an electric shock or fire, or damage the heater.
8. To prevent a possible fire, do not block air intakes or exhaust in any manner.
9. A heater has hot and arcing or sparking parts inside. Do not use if in areas where gasoline, paint, or flammable vapors or liquids are used or stored.
10. Use this heater only as described in this manual. Any other use not recommended by the manufacturer may cause fire, electric shock, or injury to persons.
11. This heater may include an audible or visual alarm to warn that parts of the heater are getting excessively hot. If the alarm sounds (or illuminates), immediately turn the heater off and inspect for any objects on or adjacent to the heater that may have blocked the airflow or otherwise caused high temperature to have occurred. DO NOT OPERATE THE HEATER WITH THE ALARM SOUNDING (OR ILLUMINATING).
12. **“SAVE THESE INSTRUCTIONS”**

### Additional Important Instructions

- Use a dedicated 20 Amp (or higher) breaker.
- Never use with an extension cord or relocatable power tap (outlet/power strip).
- Never use a wall mount bracket from another manufacturer.
- Always disconnect this unit from the power supply before performing any assembly or cleaning, or before relocating the electric fireplace.
- Always store this heater in a dry location. Never use the fireplace if it has become wet.
- This product is not intended to be a primary heat source. It is for supplemental heat only.

# CONSIGNES IMPORTANTES

## ATTENTION

Lors de l'utilisation d'appareils électriques, des précautions de base doivent toujours être suivies pour réduire les risques d'incendie, d'électrocution et de blessures, notamment les suivantes :

1. Lisez toutes les instructions avant d'installer ou d'utiliser le radiateur.
2. Ce radiateur est chaud lorsqu'il est utilisé. Pour éviter les brûlures, ne laissez pas la peau nue toucher les surfaces chaudes. Gardez les matériaux combustibles, tels que les meubles, les oreillers, la literie, les papiers, les vêtements, etc. et les rideaux à au moins 3 pieds (0,9 m) de l'avant de l'appareil de chauffage et éloignez-les des côtés et de l'arrière (des restrictions sur les côtés et l'arrière s'appliquent à radiateurs dédiés à l'emplacement uniquement)
3. Une extrême prudence est nécessaire lorsqu'un appareil de chauffage est utilisé par ou à proximité d'enfants ou de personnes invalides et chaque fois que l'appareil de chauffage est laissé en marche et sans surveillance.
4. Ne faites pas fonctionner le radiateur après un dysfonctionnement. Débranchez l'alimentation au panneau de service et faites inspecter le radiateur par un électricien réputé avant de le réutiliser.
5. Ne pas utiliser à l'extérieur. (Omis si le radiateur est destiné à être utilisé à l'extérieur.)
6. Pour déconnecter le réchauffeur, éteignez les commandes et mettez le circuit du réchauffeur sous tension au niveau du panneau de déconnexion principal (ou actionnez l'interrupteur de déconnexion interne, le cas échéant).
7. N'insérez pas ou ne laissez pas d'objets étrangers pénétrer dans les ouvertures de ventilation ou d'évacuation, car cela pourrait provoquer une électrocution ou un incendie, ou endommager le radiateur.
8. Pour éviter un éventuel incendie, ne bloquez en aucune manière les prises d'air ou les sorties d'air.
9. Un appareil de chauffage contient des pièces chaudes et produisant des arcs ou des étincelles à l'intérieur. Ne pas utiliser si dans des zones où de l'essence, de la peinture ou des vapeurs ou liquides inflammables sont utilisés ou stockés.
10. Utilisez cet appareil de chauffage uniquement comme décrit dans ce manuel. Toute autre utilisation non recommandée par le fabricant peut provoquer un incendie, un choc électrique ou des blessures.
11. Cet appareil de chauffage peut inclure une alarme sonore ou visuelle pour avertir que des pièces de l'appareil de chauffage deviennent excessivement chaudes. Si l'alarme retentit (ou s'allume), éteignez immédiatement l'appareil de chauffage et recherchez tout objet sur ou à proximité de l'appareil de chauffage qui aurait pu bloquer le flux d'air ou autrement provoqué une température élevée. NE PAS FAIRE FONCTIONNER LE CHAUFFAGE LORSQUE L'ALARME SONNE (OU S'ALLUME).
12. **"CONSERVEZ CES INSTRUCTIONS"**

**Instructions importantes supplémentaires**

- Utilisez un disjoncteur dédié de 20 A (ou plus) .
- Ne jamais utiliser avec une rallonge ou une prise d'alimentation amovible (prise/multiprise).
- N'utilisez jamais un support de montage mural d'un autre fabricant.
- Débranchez toujours cet appareil de l'alimentation électrique avant d'effectuer tout assemblage ou nettoyage, ou avant de déplacer le foyer électrique.
- Rangez toujours cet appareil de chauffage dans un endroit sec. N'utilisez jamais le foyer s'il est devenu humide.
- Ce produit n'est pas destiné à être une source de chaleur primaire. C'est uniquement pour le chauffage d'appoint.

# USER INSTRUCTIONS

## POWER DATA

| | LPS-4414V2 | LPS-5614V2 | LPS-6814V2 | LPS-8014V2 | LPS-9614V2 |
|---|---|---|---|---|---|
| Volts/HZ Amps | AC 120Vs<br>60Hz 13 Amp | AC 120V<br>60Hz 13 Amp | AC 120V<br>60Hz 13 Amp | AC 120V<br>60Hz 13 Amp | AC 120V<br>60Hz 13 Amp |
| Heater | AC 120V 1465W | AC 120V 1465W | AC 120V 1465W | AC 120V 1465W | AC 120V 1465W |
| BTUs | 5,000 BTUs | 5,000 BTUs | 5,000 BTUs | 5,000 BTUs | 5,000 BTUs |
| Lamps | LED 12V | LED 12V | LED 12V | LED 12V | LED 12V |
| Motor | 12 VDC<br>Stepper Motor | 12 VDC<br>Stepper Motor | 12 VDC<br>Stepper Motor | 12 VDC<br>Stepper Motor | 12 VDC<br>Stepper Motor |
| Shipping Size | 46.625" x 26"<br>x 8.07"<br>1185mm<br>x 660mm<br>x 205mm | 59" x 26"<br>x 8.07"<br>1500mm<br>x 660mm<br>x 205mm | 70.5" x 26"<br>x 8.07"<br>1790mm<br>x 660mm<br>x 205mm | 82.5" x 26"<br>x 8.07"<br>2095mm<br>x 660mm<br>x 205mm | 98.5" x 26"<br>x 8.07"<br>2500mm<br>x 660mm<br>x 205mm |

# PRODUCT GUIDE

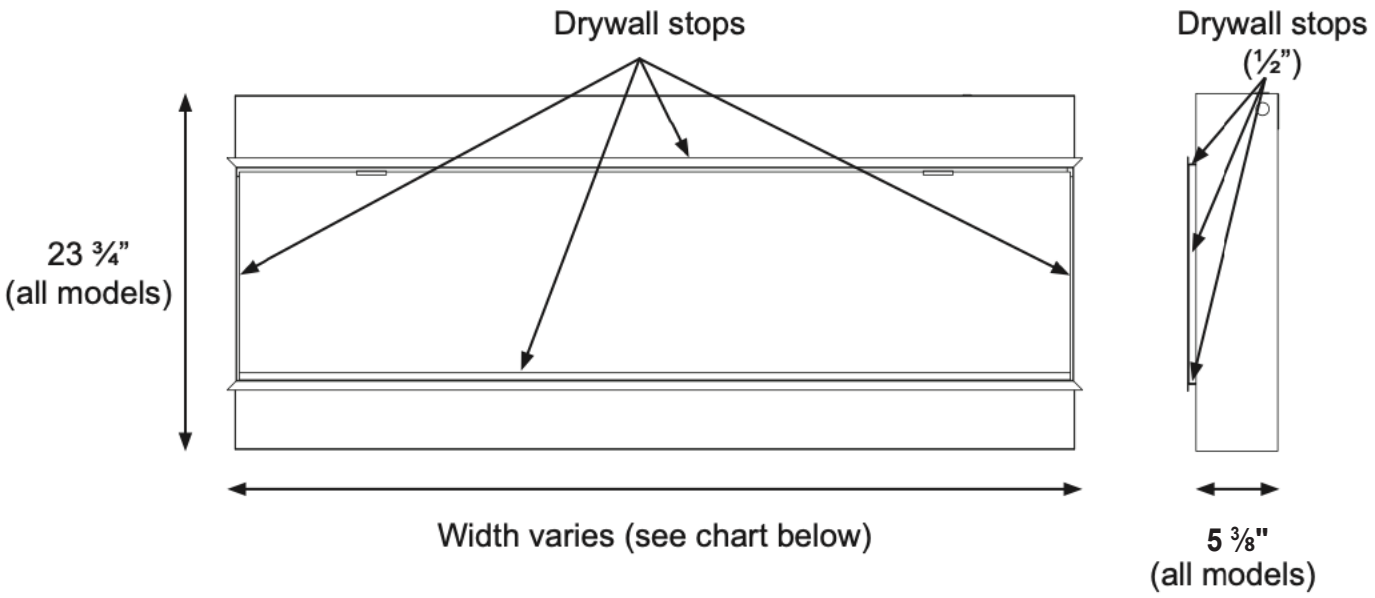


| Model | Viewing Area | Firebox Dimensions | Framing Dimensions |
|---|---|---|---|
| LPS-4414V2 | 43 ⅝" W x 13 ⅝" H<br>1111mm W x 356mm H | 44 1/16" W x 23 ¾" H x 5 ⅜" D<br>1124mm W x 603mm H x 141mm D | 44 ¼" W x 24 ⅛" H x 6" D<br>1130mm W x 613mm H x 152mm D |
| LPS-5614V2 | 55 ⅝" W x 13 ⅝" H<br>1416mm W x 356mm H | 56 1/16" W x 23 ¾" H x 5 ⅜" D<br>1430mm W x 603mm H x 141mm D | 56 ¼" W x 24 ⅛" H x 6" D<br>1435mm W x 613mm H x 152mm D |
| LPS-6814V2 | 67 ⅝" W x 13 ⅝" H<br>1721mm W x 356mm H | 68 1/16" W x 23 ¾" H x 5 ⅜" D<br>1735mm W x 603mm H x 141mm D | 68 ¼" W x 24 ⅛" H x 6" D<br>1740mm W x 613mm H x 152mm D |
| LPS-8014V2 | 79 ⅝" W x 13 ⅝" H<br>2026mm W x 356mm H | 80 1/16" W x 23 ¾" H x 5 ⅜" D<br>2040mm W x 603mm H x 141mm D | 80 ¼" W x 24 ⅛" H x 6" D<br>2045mm W x 613mm H x 152mm D |
| LPS-9614V2 | 95 ⅝" W x 13 ⅝" H<br>2432mm W x 356mm H | 96 1/16" W x 23 ¾" H x 5 ⅜" D<br>2446mm W x 603mm H x 141mm D | 96 ¼" W x 24 ⅛" H x 6" D<br>2451mm W x 613mm H x 152mm D |

# PARTS and HARDWARE

| | | | | |
|---|---|---|---|---|
| (1) Fireplace | (1) Owners Manual | (1) L-Metal Mounting Bracket Set | (1) Remote | (1) Canyon Driftwood Logs Set |
| (1) Front Glass | (1) Battery Tool | (1) CR2025 Battery | (1) Suction Cup | (1) Trim |
| Smoke Acrylic Crystals Pkg | Clear Acrylic Stones Pkg | Wall Mount (1) Touch Control (Sold Separately) | | |

# INSTALLATION

Select a suitable location that is not susceptible to moisture and away from drapes, furniture, and high traffic areas.

**NOTE: Follow all national and local electrical codes.**

This product includes a **GLASS panel**. Always use **extreme caution** when handling **glass**. Failure to do so could result in **personal injury** or **property damage**.

# INSTALLATION

Due to the many different materials used on different walls, it is highly recommended that you consult your local builder before you install this fireplace.

Remove all parts and hardware from the carton and place them on a clean, soft, dry surface. Check the parts list to make sure nothing is missing. Dispose of packaging materials properly. Please recycle whenever possible.

**You will need the following tools (not included):** Phillips screwdriver, stud finder, level, tape measure, electric drill, 1/4” wood drill bit, hammer.

## Hard wire to a dedicated ~120 volt 20 amp circuit.

**To be performed by a qualified electrician according to local building codes**

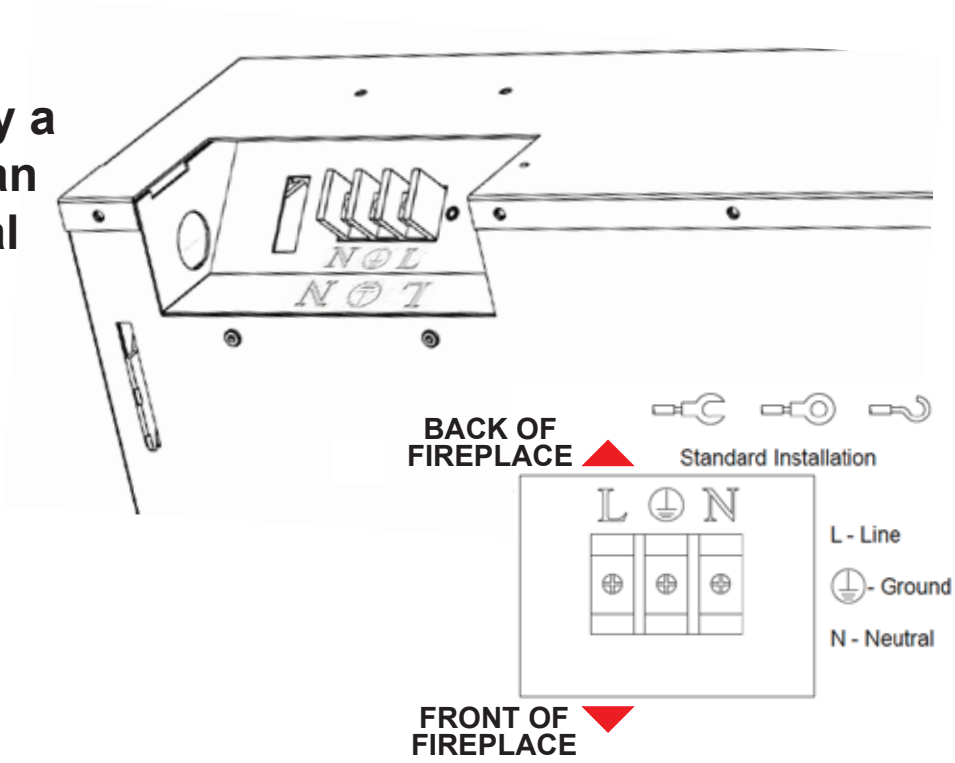


**NOTE: A dedicated 20 Amp (or higher) breaker is required.** This fireplace must be electrically connected and grounded in accordance with local codes. In the absence of local codes, use the current CSA C22.1 CANADIAN ELECTRICAL CODE in Canada or the current ANSI/NFPA 70 NATIONAL ELECTRICAL CODE in the United States.

**A. Turn off power from the circuit breaker first.**

B. Remove the cover plate from the right-side top on the rear of the fireplace.

# BUILT-IN INSTALLATION

## Fully Recessed Installation (Single Sided)

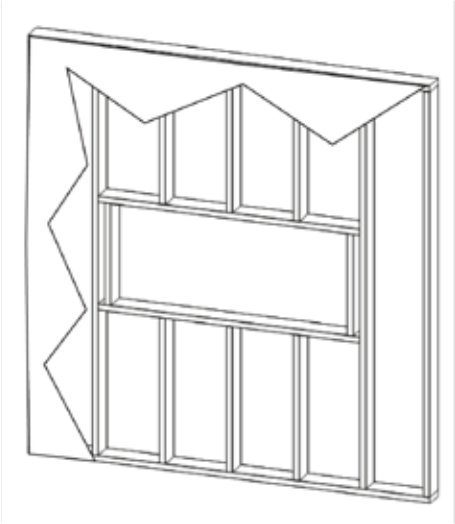

1. This installation is optimized for a 2x6 framed wall. Prepare the framed opening according to the framing dimensions chart (pg 4).
   **Provide appropriate dedicated circuit for hardwire install at the top right of framed opening.*

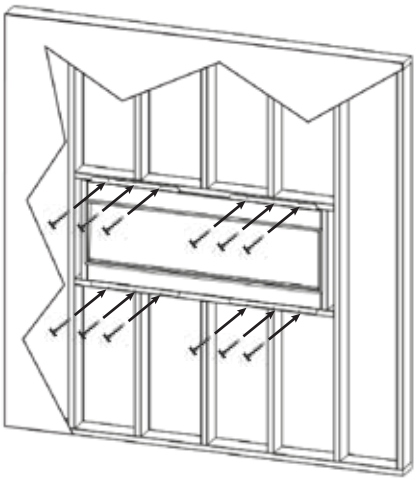

2. Install L Metal mounting brackets to the top and bottom of the fireplace with supplied screws.
3. Hardwire fireplace (see page 6)
4. Install the fireplace in the framed opening with a minimum 1 1⁄4" drywall screws to secure the unit.

5. Mask the exposed fireplace during the drywall process. Install drywall to the drywall stops on the perimeter of the fireplace.
   For more information on the drywall stops see the product guide on page 4.

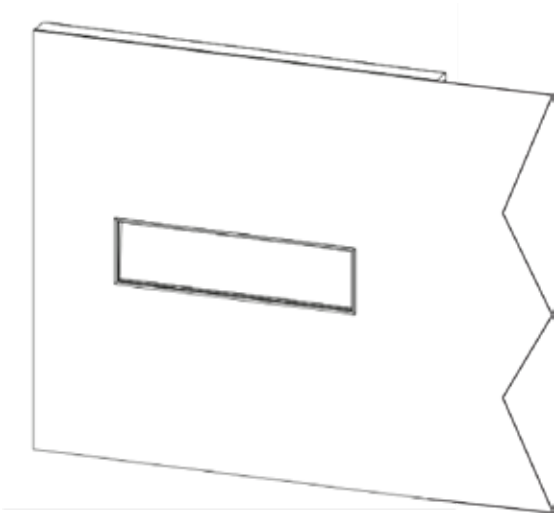

5. Remove glass (see page 10) and install media. See page 9 for log layout.

# BUILT-IN INSTALLATION

## Partial Recessed Installation

1. This installation is optimized for a 2x4 framed wall. Prepare the framed opening according to the framing dimensions chart on page 4.
   *Provide appropriate dedicated circuit for hardwire install at the top right of framed opening.

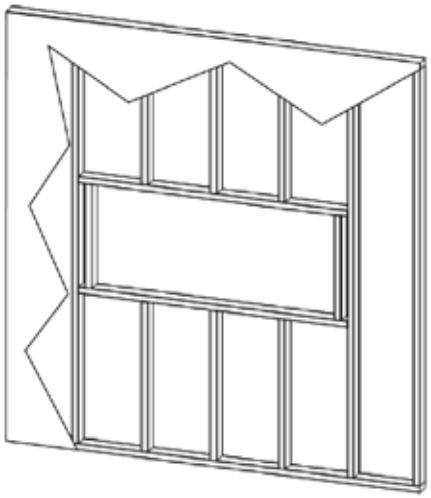

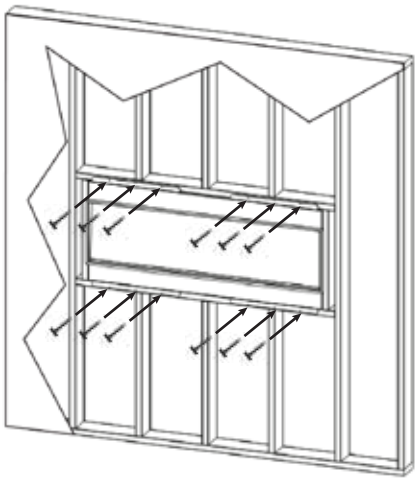

2. Install L Metal Nailing Flanges to the fireplace.
3. Hardwire fireplace (see page 6)
4. Install the fireplace in the framed opening with a minimum 1 1⁄4" drywall screws to secure the unit.

5. Mask the exposed fireplace during the drywall process. Install drywall to the perimeter of the fire box. The unit can be covered with a custom facade.

6. Remove glass (see page 10) and install media. See page 9 for log layout.

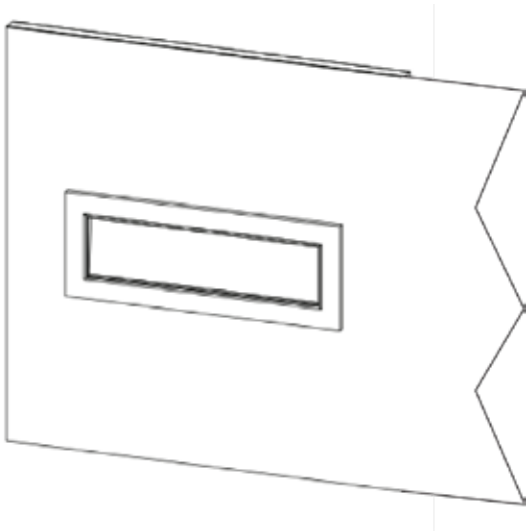

# LOG SETS

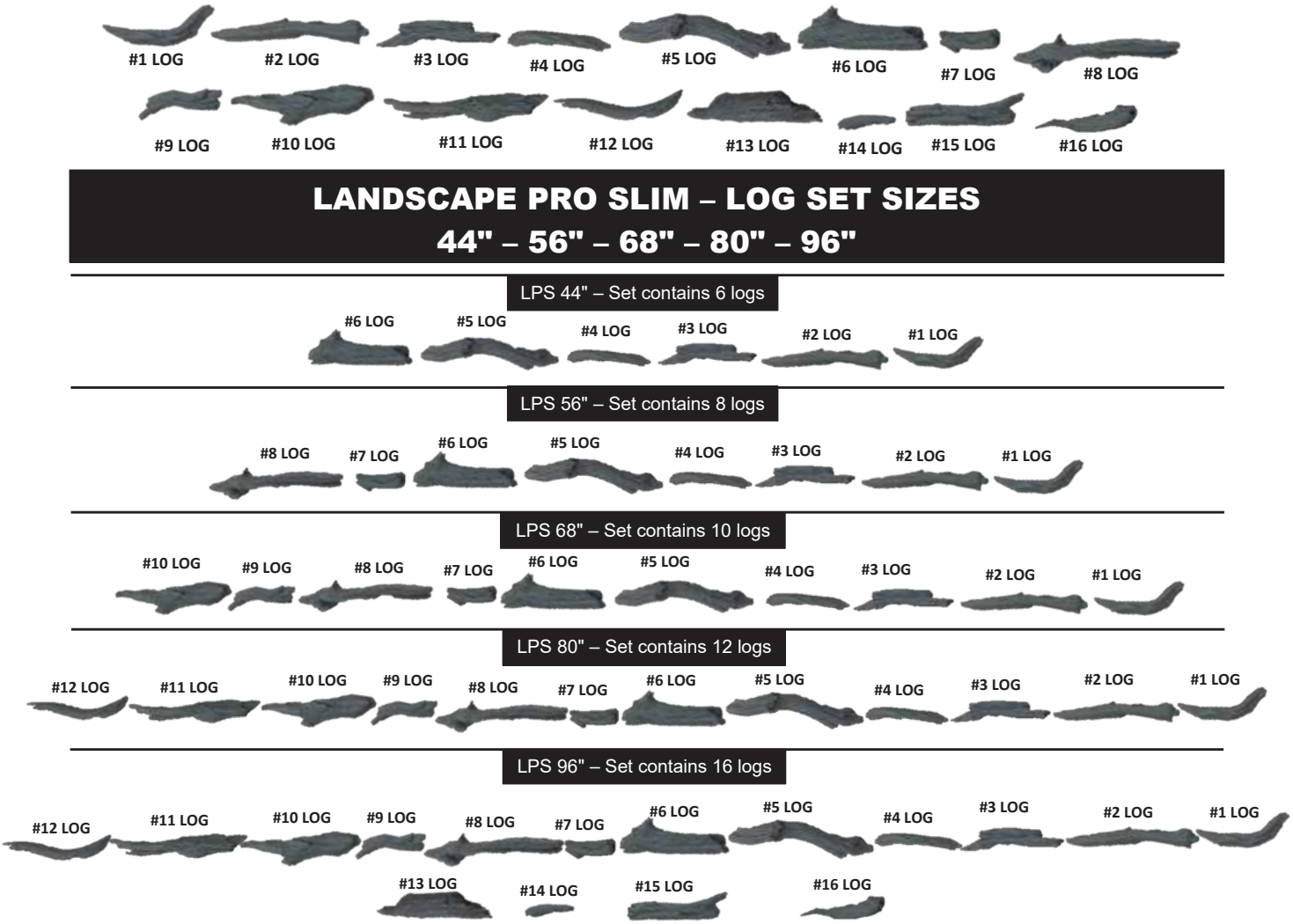


## LANDSCAPE PRO SLIM – LOG SET SIZES
## 44" – 56" – 68" – 80" – 96"

LPS 44" – Set contains 6 logs

#6 LOG #5 LOG #4 LOG #3 LOG #2 LOG #1 LOG

LPS 56" – Set contains 8 logs

#8 LOG #7 LOG #6 LOG #5 LOG #4 LOG #3 LOG #2 LOG #1 LOG

LPS 68" – Set contains 10 logs

#10 LOG #9 LOG #8 LOG #7 LOG #6 LOG #5 LOG #4 LOG #3 LOG #2 LOG #1 LOG

LPS 80" – Set contains 12 logs

#12 LOG #11 LOG #10 LOG #9 LOG #8 LOG #7 LOG #6 LOG #5 LOG #4 LOG #3 LOG #2 LOG #1 LOG

LPS 96" – Set contains 16 logs

#12 LOG #11 LOG #10 LOG #9 LOG #8 LOG #7 LOG #6 LOG #5 LOG #4 LOG #3 LOG #2 LOG #1 LOG

#13 LOG #14 LOG #15 LOG #16 LOG

# LOG PLACEMENT

## LANDSCAPE PRO SLIM – LOG PLACEMENT
## 44" – 56" – 68" – 80" – 96"

LPS 44" – Set contains 6 logs

LPS 56" – Set contains 8 logs

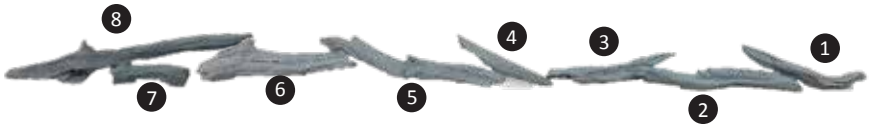


LPS 68" – Set contains 10 logs

LPS 80" – Set contains 12 logs

LPS 96" – Set contains 16 logs

# INSTALLING MEDIA AND FRONT GLASS

1. Remove screws from top of glass bracket. Use the small suction cup provided in the hardware kit to lean glass towards the front. Then lift glass up and away. Place glass in soft, safe area.

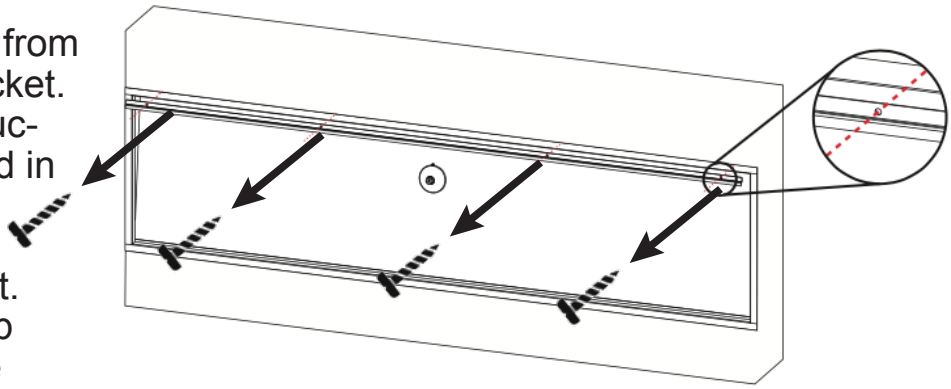

2. The fireplace comes with clear and smoke crystals. Mix crystals together and evenly spread crystals along the ember bed.

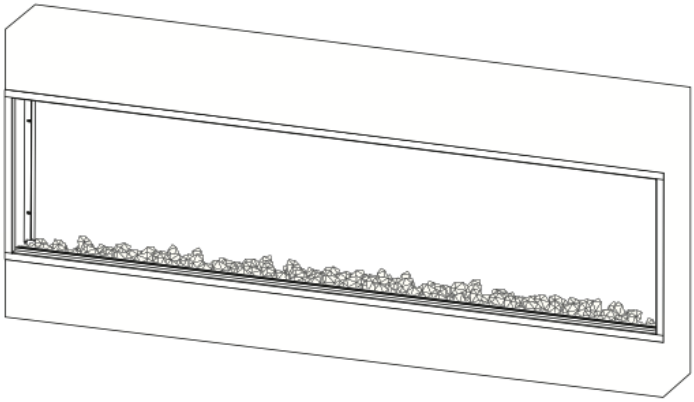

3. Place the logs on top of the acrylic crystals.

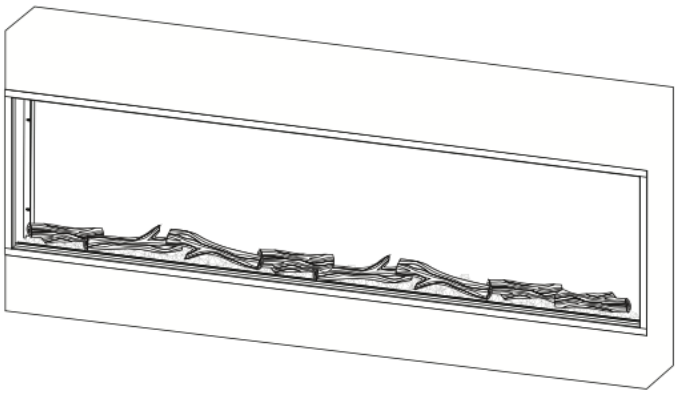

4. The front glass can now be installed, by installing bottom of glass in track, then tilt towards fireplace.
After placing the front glass it can be secured with screws.

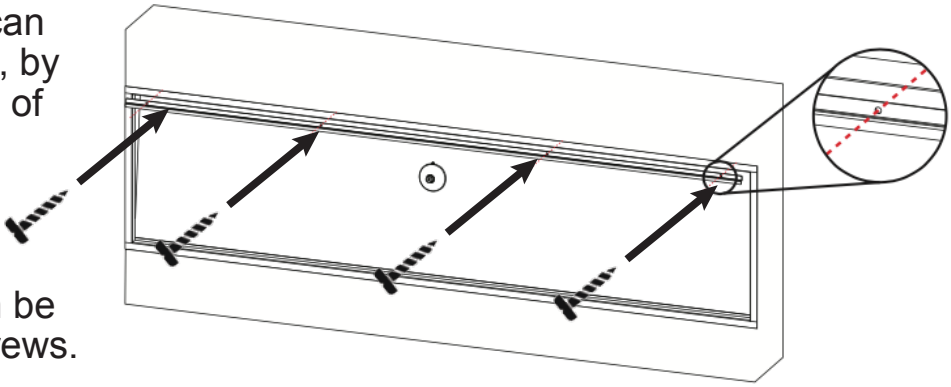

# REMOTE CONTROL OPERATION

The unit has a main power switch just in front of the glass on the top right hand side. A hand-held remote is included.

| | | |
|---|---|---|
| | **Power** | This will cycle the fireplace on and off. Upon cycling power on, the fireplace will return to the settings it had when it was cycled off . |
| | **Home** | If the fireplace is on, this button will act as a reset and bring all colors back to the default Modern Flames' signature color. |
| | **Heat** | This will cycle the heater between high, low and off . |
| | **Mode** | All zones of the fireplace will cycle through various demo modes - 7 & 3 color gradient/fade, 7 & 3 color jump, red/green/blue gradient. |
| | **Speed** | This is the speed button. Pressing will cycle the flame & ember bed speeds. Speeds: Low, Medium, Default & High. |
| | **Flame** | This is a zone setting. Touching this button will allow you to change the color and brightness of the flame by using the color wheel and brightness slider. |
| | **Ember Bed** | This is the Ember Bed light adjustment button. After pressing this button, the color ring and brightness bar will be adjusted, and only the color of the ember bed lamp will be adjusted. Long press this button for 3 seconds to adjust the optional accessory on or off |
| | **Downlight** | This is a zone setting that controls the color and brightness of the downlight. |
| | **Color Wheel** | This will cycle the selected zone through the colors of the color spectrum. |
| | **Brightness Slider** | This will adjust the brightness of the selected zone. |

## Pairing remote or wall mounted touch control:

Before beginning, read pairing instructions in its entirety. Locate and familiarize yourself with the manual touch controls on the fireplace and your hand held remote. Ensure remote has a battery installed.

1. On the fireplace touch controls, long press the on/off button for 3 seconds until a fast double beeping tone is heard from the fireplace. The power indicator will also flash 3 times in 1 second. This places the fireplace in RF pairing mode.
2. Within 5 seconds of hearing the double beeping tone, either on the handheld remote or wall touch control, press the power button repeatedly until another beeping tone is heard along with the indicator lights flashing. This is the fireplace acknowledging that it has paired. An additional tone may also be heard; this is simply the fireplace completing the pair mode.

**NOTE:**

- Pairing must be done within 5 seconds or the fireplace will time out of pairing mode.
- After the initial double beep is heard, do not long press the power button on the remote/pairing device to pair as this may not be successful. Pressing the power button repeatedly is required to ensure the signal is sent from the remote/pairing device to the fireplace.
- To clear any paired remotes/devices from the fireplace, locate the reset button on the fireplace, then long press the reset button for 3 seconds. A beeping tone will indicate that the codes have been cleared. Once cleared, a new remote or wall touch control can now be paired. This will also un-pair any APP that was paired to the fireplace.

# SETTING CONTROLS

**Toggle Switch:** The fireplace has a main toggle switch located next to the manual controls. The toggle switch is in front of the glass on the top right side of the viewing area. When the "-" side of the toggle switch is depressed, the "O" pops up. This is the power-on state of the fireplace.

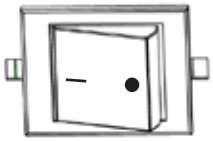

**Power Indicator lights**: The fireplace is equipped with Power indicator lights which are located on the upper right corner of the fireplace viewing area.

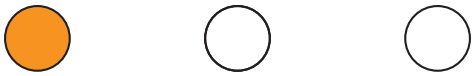

**First light:** When the fireplace is in the power-on state, an amber light turns on. The light shows the fireplace is energized and on stand-by for any commands. The amber light turns OFF when the fireplace is turned on and operating.

**Second light:** When the fireplace is powered on and the heater is set to low, the second light turns on. Light will fade away after 6 seconds.

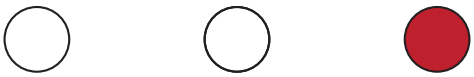

**Third light:** When the fireplace is powered on and the heater is set to high, the third light turns on. Light will fade away after 6 seconds.

## Manual Controls

The fireplace has manual controls located next to the toggle switch, in front of the glass on the top right side of the viewing area.

| Power | Heat | Color | Reset |
|---|---|---|---|
| Turns unit on/off | Cycles heat low/ high/off | Changes all fireplace colors together | Resets unit |

**Power On/Off button:** Press once, indicator light turns off and fireplace power turns on. All functions enabled. Press again, flame turns off and fireplace goes to standby. NOTE: Long pressing this button for 3 seconds places fireplace in RF pairing mode.

**Heat Button:** Pressing heat button cycles the heater and blower on/off. Settings: Heater and blower OFF, Low Heat, and High Heat. Indicator light will match according to status. NOTE: On US LPM, low and high heat have the same heat output when wired for 120 V. Long Press the heater button for 5 seconds to lock/unlock the heater.

**Preset Color Button:** Press preset color button to cycle through the 8 preset color options. This changes color of all three zones: the flame, ember bed and down light. Colors in order of appearance: MF orange-red-orange-golden orange-green-aqua-blue-magenta

**Resetting button:** Clears any paired remotes/devices from the fireplace. Once cleared you can pair a new remote or wall touch control. This will also un-pair any APP that was paired to the fireplace. After long pressing the reset button for 3 seconds, a beeping tone will be heard indicating that the pairing codes have been cleared.

**Buzzer Tone Change:** Long press the on/off and preset color button at the same time to enter the beeping tone cycle mode. Continue to long press both buttons to cycle through the 4 tone options. The tone will change every 2 seconds while releasing the buttons will act as the selection of the tone. The tones in order of appearance are; tone-1, tone-2, tone-3, and silent mode.

# SETTING CONTROLS

**NOTE:** When silent mode is selected, a tone will still be present for performing system functions such as remote pairing or Wi-Fi pairing.

**Placing in Wi-Fi Paring Mode:**

**-EZ Mode:** While the fireplace is ON, long press the Preset Color button for 3 seconds. An audible beeping tone will sound and the flame light, ember bed light, and down light will turn to white and begin flashing rapidly. Fireplace is now in EZ pairing mode, which lasts for 2 minutes.

**-AP Mode:** While the fireplace is ON, long press the Preset Color button for 6 seconds. Two audible beeping tones will sound and then only the FLAME LIGHTS and nothing else will turn to white and begin flashing slowly. Fireplace is now in AP pairing mode, which lasts for 2 minutes**.**

**NOTE:** Fireplace is also equipped with Bluetooth pairing. There is no mode setting for the Bluetooth as the APP will automatically detect the Bluetooth signal for pairing when attempting to pair fireplace to Bluetooth.

# HOW TO CHANGE REMOTE BATTERY

**Link to video on how to change battery in Pro Series remote CR2025 battery**

# LINK TO DOWNLOAD MOBILE APP

**Link to Mobile App for tablets & phones**

# WIFI REMOTE

## Power
Powers unit On & Off.

## Flame
This is the flame zone adjustment tab. After pressing this tab, the color ring and brightness bar can be adjusted.

## Ember Bed
This is the ember bed zone adjustment tab. After pressing this tab, the color ring and brightness bar can be adjusted.

## Downlight
This is the downlight zone adjustment tab. After pressing this tab, the color ring and brightness bar can be adjusted.

## Sync
This is a synchronization selector, used to synchronize the current color on the color wheel to all of the zones (Flame/Ember Bed/Downlight). Grayed out SYNC is when synchronization is “OFF”. Green SYNC is when synchronization is “ON”.

## Color Wheel
This is the color adjustment wheel for all zones. Keeping contact on the color circle, the color of the selected zone will change continuously base on where you have your finger.

## Temperature Read Out
The number in the color circle is the built-in thermostat temperature reading of the fireplace.

## Brightness Control
Brightness adjustment, for all zones depending on tab selected or if sync is on. The brightness of the fireplace changes in real time as the slider is moved.

## Heat Control
Heat controls open a drop-down menu. The menu displays off, low, and high. Can be used without thermostat.

## Thermostat Slider
Normally inactive while heater is “ON.” To use the thermostat while the heater is “ON,” activate the thermostat by setting the slider to the desired temperature.

Note: Does not save when turned “OFF.”

# WIFI REMOTE

## Mode Sub Menu

### Mode Button

Opens a sub menu for selecting presets.

**PRESET MENU**

**> Modern Flames Original**
Modern Flames Orange (Static).

**> Horizon**
Same as remote control, 7 color gradient cycle R->G->B->RG->RB->GB->RGB.

**> Trifecta**
Same as remote control, R-G-B three color gradient cycle.

**> Crimson**
Same as remote control, 3 color gradient cycle R->G->B.

**> Hillside**
Same as remote control, green monochrome fade cycle.

## Preset Menu

**> Island Time**
Same as remote control blue monochrome fade cycle.

**> Seven Color Demo**
Same as remote control, 7 color jump cycles: R->G->B->RG->RB->GB->RGB.

**> Three Color Demo**
Same as remote control, 3 color jump cycles: R->G->B.

**> Custom 1**
Custom mode can be modified from “My Ambience” setting. The default color is Red.

**> Custom 2**
Custom mode can be modified from “My Ambience” setting. The default color is White.

**> Custom 3**
Custom mode can be modified from “My Ambience” setting. The default color is Blue.

# WIFI REMOTE

Timer

## Timer

Pressing the timer button will pop up a sub-menu with 10 options to choose from: 0.5-1-2-3-4-5-6-7-8 hours-cancel. Once the selected time has elapsed, the fireplace will turn off.

My ambience

## Ambience Setting

The Ambience Setting button will open up a second window where customizations can be performed, including temperature scale setting (C/F), Weekly/Heat programming, Custom mode configuration, and changing speed of the flame and ember bed.

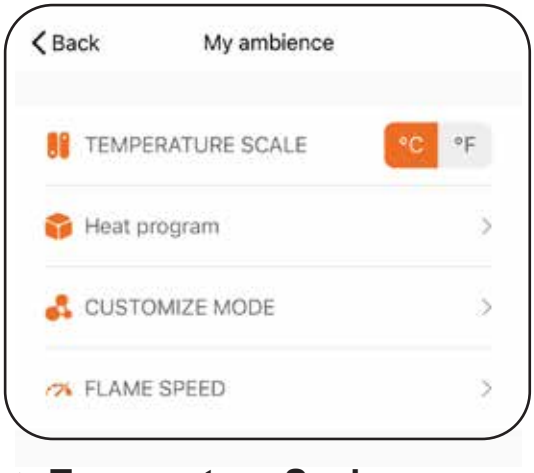


### > Temperature Scale

Set the temperature unit according to needs. “°C” for Celsius and “°F” for Fahrenheit. The main temperature read out will change accordingly.

### > Heat Program

Setup a custom weekly schedule. This includes the state of the fireplace, the heater level and thermostat for the heat if desired. (See Heat Program Sub menu continued for more info.)

### > Customize Mode

Configure the custom modes via 4 options: mode name, mode color, Color flash mode, Color flash speed. Includes a preview function. (See Customize Mode Sub menu continued for more info.)

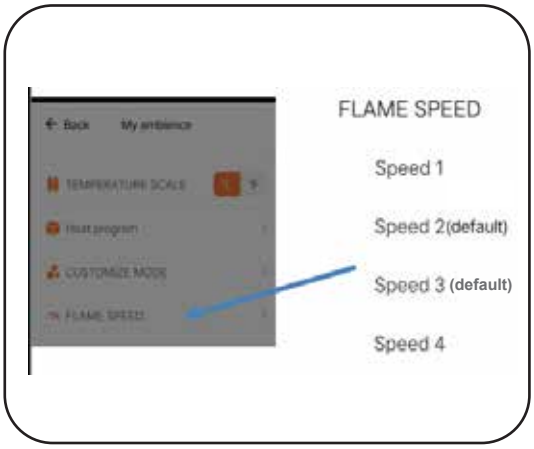


### > Flame Speed

Change between 4 speeds: Low, Medium, Default & High.

# WIFI REMOTE

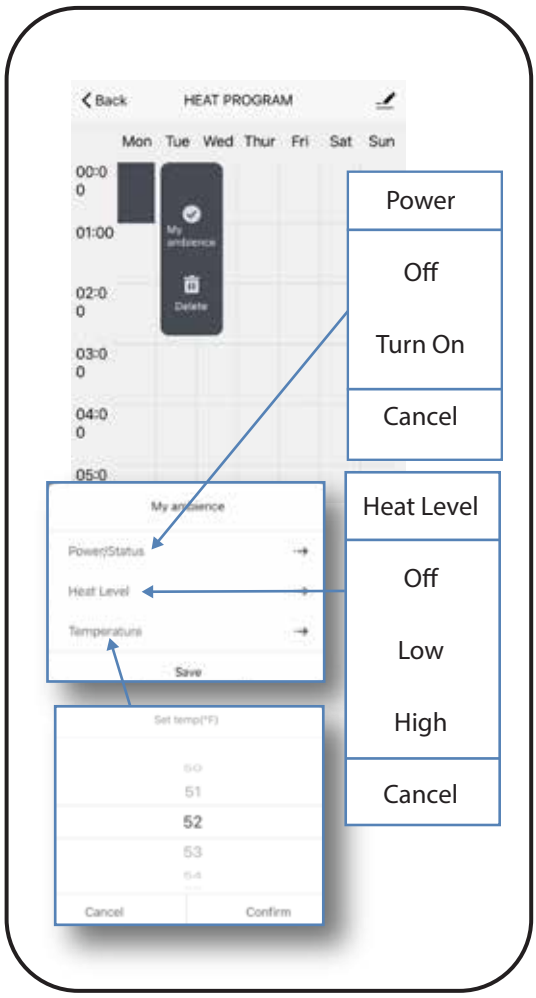


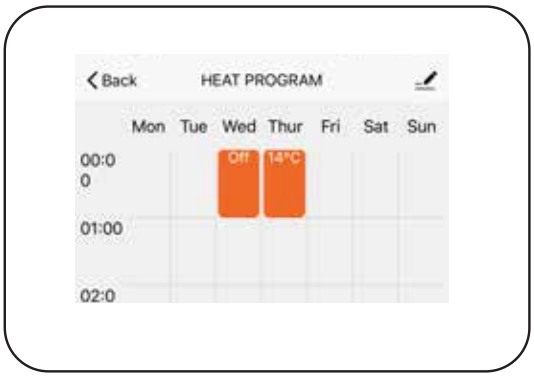


## HEAT PROGRAM SUB MENU CONTINUED

### > Power

Sets fireplace status (no heat) OFF/ON.

### > Heat Level

Sets Heat Level: OFF/LOW/HIGH.

### > Temperature

Temperature Level for the heater to turn on if the ambient temperature falls below the set temperature (High Heat).

# WIFI REMOTE

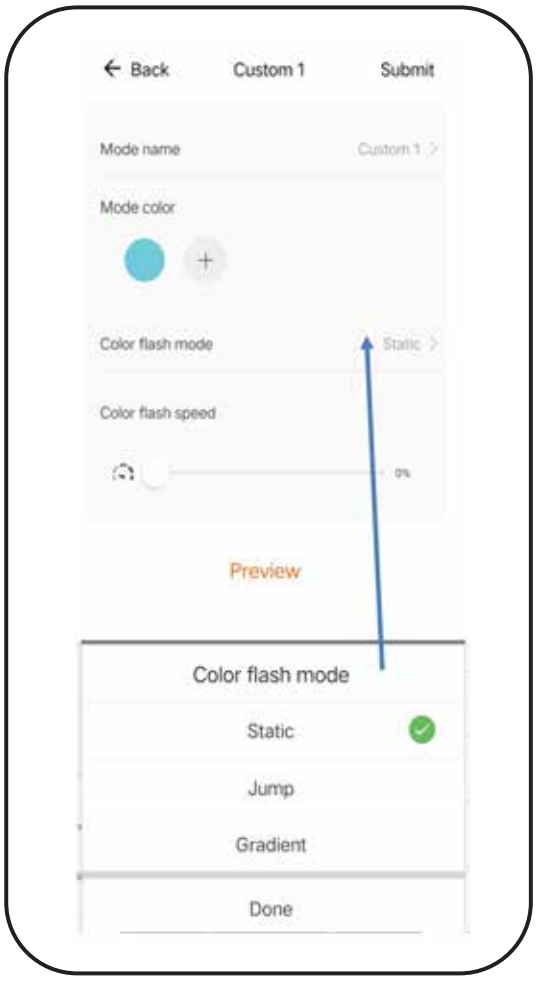


## CUSTOMIZE MODE SUB MENU

### > Mode Name

Custom name of selected mode (default will be present until changed).

### > Mode Color

Mode color: In the Static mode, only one color can be selected. After clicking the color symbol, you can change to additional colors. When using the Jump/Gradient feature, 8 colors can be programmed by clicking “+” color.

By adjusting the color sliders, select the corresponding RGB value to obtain the desired color combination..

### > Color Flash Mode

**Customizing how the color changes.**

**>Static**

No change in brightness and flash and only one color can be selected.

**> Jump**

Cycles between selected colors, up to 8. Jump speed is selected using the speed slider.

**> Gradient**

Color progression between chosen colors, up to 8. Gradient speed is selected using the speed slider.

### > Preview

Will Preview any customization being made.

# WIFI INITIAL LOG-IN

**Search for and install the “MODERN FLAMES” app from Google Play or Apple App store or scan the QR code.**

STEP 1

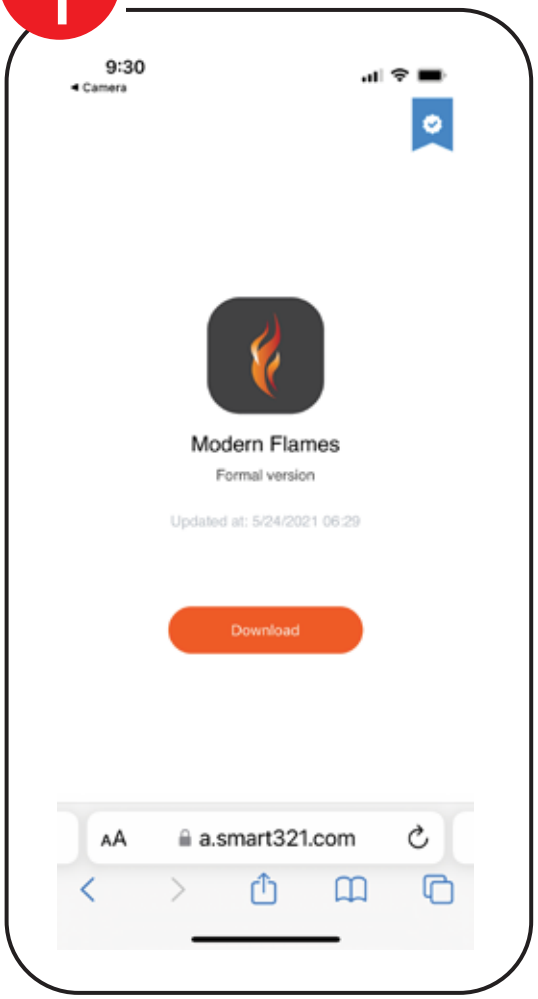


**> App example**

STEP 2

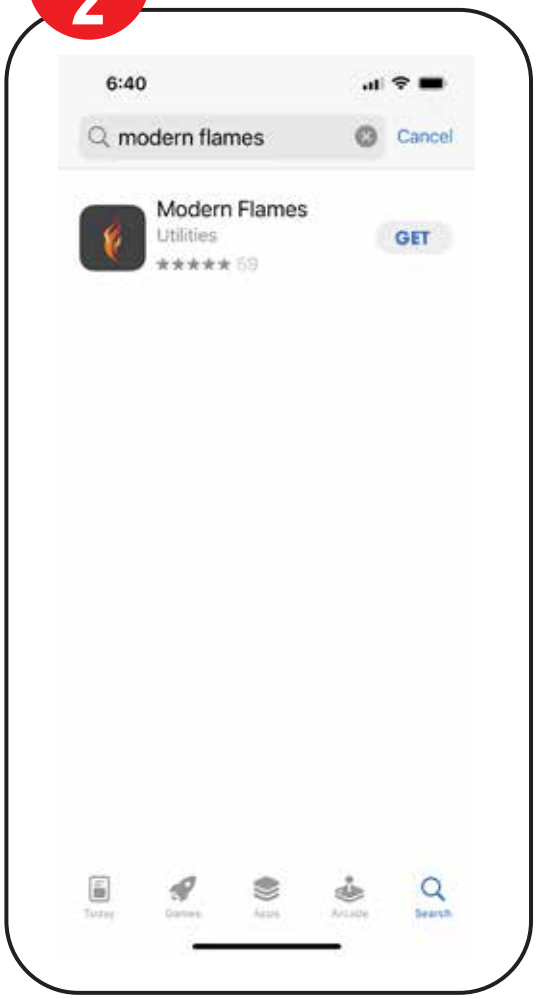


**> After download & installed**
Login to Modern Flames app.

# WIFI PAIRING

STEP 3

**> Once opened and logged in**
From HOME page,
From the home page, select the add “+” symbol.

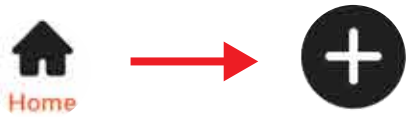


STEP 4

**> SELECT FIREPLACE**
Select series of fireplace that will be pairing too and follow instructions.

# WIFI REMOTE

STEP 5

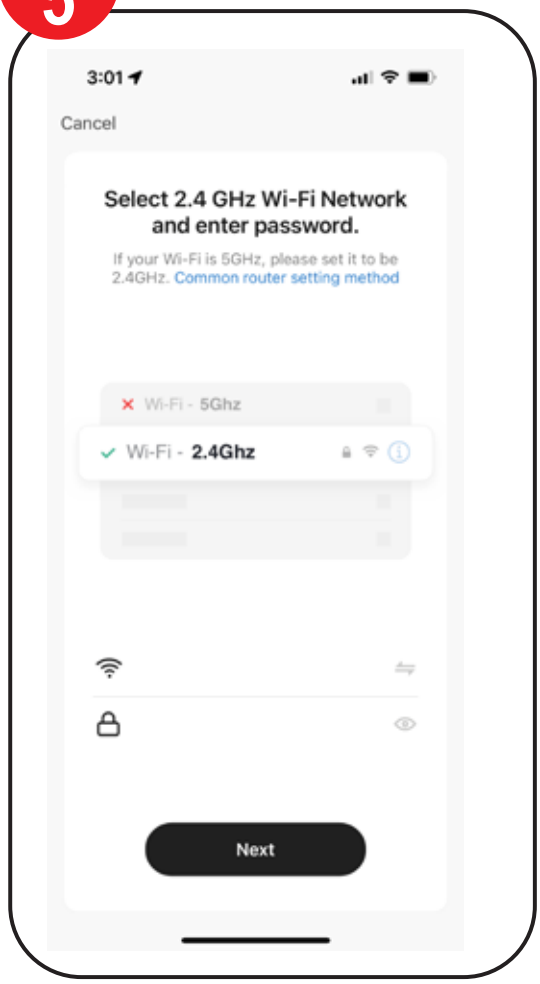


STEP 6

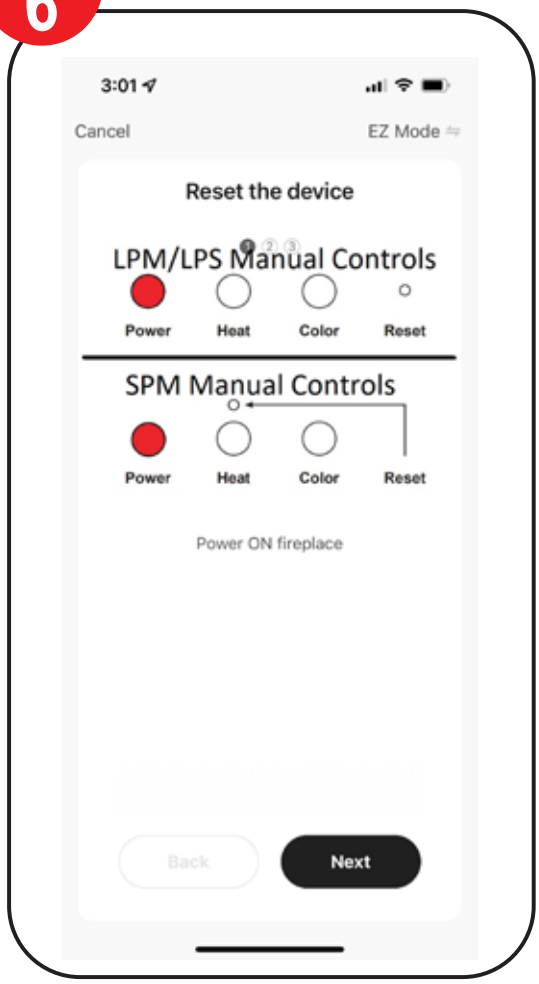


## > WiFi Information

If pairing via Wi-Fi you must use **2.4 GHz Wi-Fi**, and must have information filled out to move to next step.

## > Ensure fireplace is ON

Using the fireplace manual touch controls, turn ON the fireplace.

# WIFI REMOTE

STEP 7

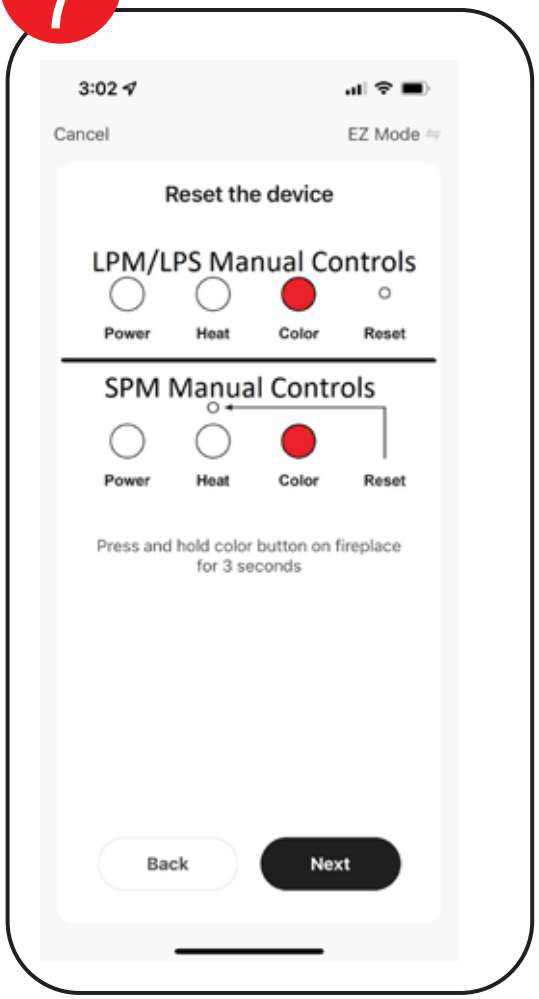


STEP 8

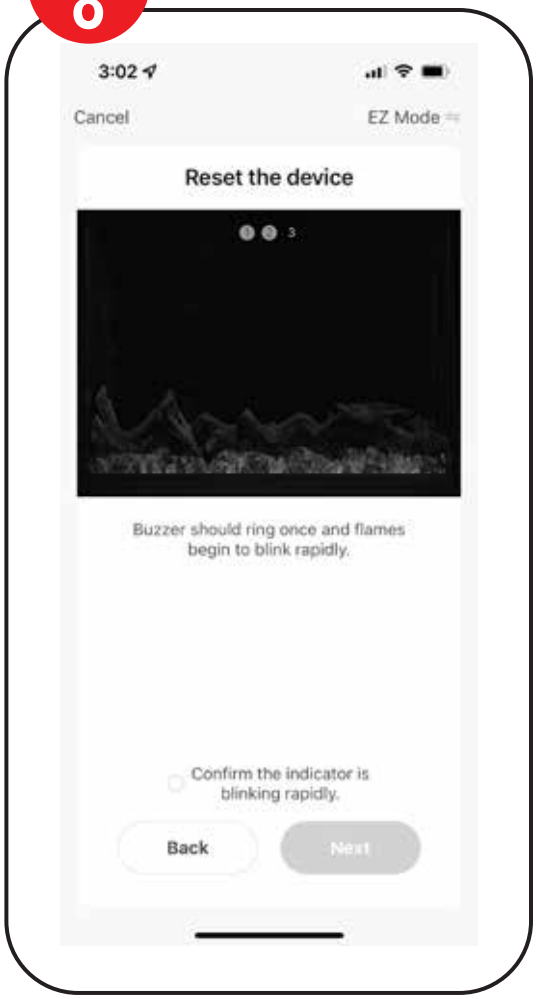


## > Place fireplace in pairing mode

Once fireplace is “ON”, place fireplace in Wi-Fi pairing mode following the instructions for pairing mode on the APP. There are 3 types of pairing EZ mode, AP mode and a Bluetooth mode. EZ and AP modes will be displayed accordingly on the top right of the screen. Example displayed is EZ mode.

## > Wi-Fi Pairing confirmed

EZ pairing mode is confirmed with a single audible beeping tone is heard and all the lights begin to blink rapidly

AP pairing mode is confirmed with two audible beeping tones are heard and ONLY the FLAME begins blinking slowly.

**Select confirm to move forward to Next step*

**Note:** Device remains in pairing mode for 2 minutes.

# WIFI REMOTE

STEP 9

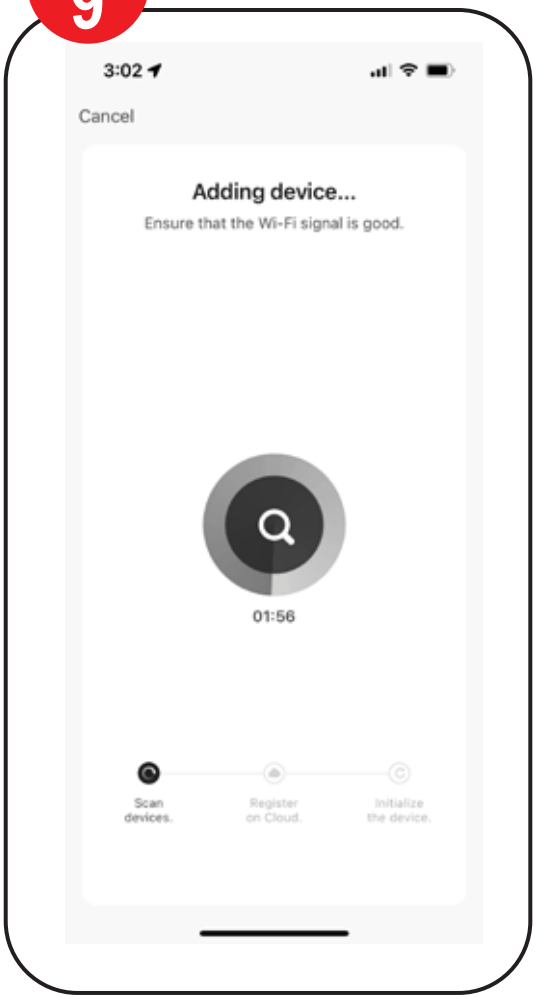


STEP 10

## > PAIRING

Device & APP should now begin to pair. Depending on Wi-Fi this can take up the entire 2 minutes to pair, or it may need to be repeated more than once, if the signal isn't captured the first time.

## > DEVICE PAIRED SUCCESSFULLY

**NOTE**: Do not turn off or disconnect the fireplace from power while pairing the Wi-Fi or performing updates. Failure to do so can result in damage to the electrical components of the fireplace. Damage as a result of this may not be covered under warranty.

Question or assistance about pairing device contact.

customerservice@modernflames.com
or call (877) 246-9353
Monday-Friday, 8;00 am -5:00 pm (MST).

## Spare Parts

| Spare Part Description | Modern Flames Part Numbers | | | | |
|---|---|---|---|---|---|
| | LPS-4414V2 | LPS-5614V2 | LPS-6814V2 | LPS-8014V2 | LPS-9614V2 |
| FRONT GLASS | 04-00023 | 04-00024 | 04-00025 | 04-00026 | 04-00027 |
| ACRYLIC PLASTIC PANEL | 03-00048 | 03-00049 | 03-00050 | 03-00051 | 03-00052 |
| STEP MOTOR | 01-00070 | | | | |
| PTC HEATER AND BLOWER COMBO | MF-PRO-PTC-120 | | | | |
| AUS/EU PTC HEATER AND BLOWER COMBO | MF-PRO-PTC/HF-220-240V-INT | | | | |
| LED FLAME LIGHT SEGMENT | 01-00071 | | | | |
| LED EMBER LIGHT INPUT SEGMENT | 01-00073 | | | | |
| LED EMBER LIGHT ADD ON SEGMENT | 01-00074 | | | | |
| LED DOWNLIGHT INPUT SEGMENT | 01-00095 | | | | |
| LED DOWNLIGHT ADD ON SEGMENT | 01-00096 | | | | |
| REMOTE CONTROL | 01-00075 | | | | |
| TOUCH-ON CONTROL PANEL | MF-PRO-MTC | | | | |
| CIRCUIT BOARD | 01-00077 | | | | |
| ADD-ON POWER BOARD | N/A | N/A | 01-00078 | 01-00078 | 01-00078 |
| THERMOSTAT (NTC) | MF-PRO-NTC | | | | |
| METAL 1PC TRIM | 02-00251 | 02-00252 | 02-00253 | 02-00254 | 02-00255 |
| WALL MOUNTING BRACKET | 02-00256 | 02-00257 | 02-00258 | 02-00259 | 02-00260 |
| HARDWARE KIT | 09-00003 | | | | |
| CRYSTAL, CLEAR | 03-00058 | | | | |
| CRYSTAL, SMOKED | 03-00059 | | | | |
| LOG SET | 05-00099 | 05-00100 | 05-00101 | 05-00102 | 05-00103 |
| METAL SIDE BRACE FOR PLASTIC PANEL | 02-00267 | | | | |
| METAL TOP BRACE FOR GLASS FACE | 02-00268 | 02-00269 | 02-00270 | 02-00271 | 02-00272 |
| METAL, RECESS BRACKET, MOUNTING (x1) | 02-00007 | | | | |
| POWER SWITCH | MFPS2 | | | | |

| INDIVIDUAL LOGS | PART NUMBERS |
|---|---|
| LOG #1 | 05-00083 |
| LOG #2 | 05-00084 |
| LOG #3 | 05-00085 |
| LOG #4 | 05-00086 |
| LOG #5 | 05-00087 |
| LOG #6 | 05-00088 |
| LOG #7 | 05-00089 |
| LOG #8 | 05-00090 |
| LOG #9 | 05-00091 |
| LOG #10 | 05-00092 |
| LOG #11 | 05-00093 |
| LOG #12 | 05-00094 |
| LOG #13 | 05-00095 |
| LOG #14 | 05-00096 |
| LOG #15 | 05-00097 |
| LOG #16 | 05-00098 |

# TROUBLE SHOOTING

| PROBLEM | POSSIBLE CAUSE | CORRECTIVE ACTION |
|---|---|---|
| **Nothing comes on (touch screen, etc.)** | A. Breaker tripped or circuit has no power<br>B. Internal component is frozen and needs to be reset<br>C. Loose connection<br>D. Defective component | A. Reset breaker, test circuit for power, check power switch<br>B. Turn power off at the main breaker for 60 seconds. Turn power back on.<br>C. Inspect wiring for loose or damaged connection<br>D. Replace motherboard, touch control or power switch |
| **Touch Screen Comes on - then nothing** | A. Not operating touch control properly with finger<br>B. Loose connection on motherboard<br>C. Motherboard is defective | A. Press flat part of finger firmly on the touch screen and apply moderate pressure<br>B. Check functions with remote control. If functional, check connections on motherboard<br>C. Replace Motherboard |
| **Fireplace turns off and will not turn back on** | A. Fireplace has overheated and safety disc has snapped or circuit breaker has tripped | A. Turn the main breaker to the “off” position for 60 seconds. Next flip the breaker back to “on” position. |
| **Can operate fireplace functions with manual controls but not remote control** | A. Low Batteries<br>B. Remote not paired properly<br>C. Remote control defective | A. Replace batteries in remote control with - **CR2025**<br>B. With the fireplace ON, press and hold the Power button for about 3 seconds until you hear the buzzer sound twice and the power indicators begin to flash. Within 5 seconds on the hand held remote or wall touch control press the Power button repeatedly until the buzzer sounds again and the indicators flash acknowledging that it has paired. You may also hear another buzzer and the pair is now completed.<br>C. Replace remote control |
| **Heater does not provide heat when on** | A. Wiring is loose<br>B. Snap disc tripped<br>C. Heater core is defective | A. Disconnect unit from power source and inspect for loose connections<br>B. Turn off for 5 minutes to reset<br>C. Replace Heater Core |
| **Flame is not visible when unit is turned on** | A. Wiring is loose<br>B. LEDs defective<br>C. Motherboard is defective | A. Disconnect unit from power source and inspect for loose connections<br>B. Replace LEDs<br>C. Replace motherboard |
| **Fireplace lights up but there is no flame image or flame image frozen** | A. Wiring for motor is loose<br>B. Spindle rod came loose<br>C. Motor is defective | A. Disconnect unit from power source and inspect for loose connections from motor<br>B. Reconnect spindle rod<br>C. Replace motor |
| **Fireplace is squeaking when flame image is on** | A. Fireplace spindle/rod is contacting to metal<br>B. Motor is defective | A. Apply lithium grease or any standard grease to contacts with rod and metal and rubber bushings<br>B. Replace motor |

# FREQUENTLY ASKED QUESTIONS

Q. How do you change the optional Wall Touch Control to Fahrenheit/Celsius?
**A. Long press on the up and down arrows on the fire unit to toggle between Fahrenheit and Celsius.**

Q. What distance can the remote be used from the fireplace?
**A. Optimal distance for the remote control is maximum 20 feet.**

Q. Can you turn on the fireplace via the manual control and off via the remote (or vise versa)?
**A. Yes.**

Q. Can the fireplace be installed outside?
**A. No. Please review the entire safety chapter before installing this fireplace.**

Q. Does the fireplace need to be on a dedicated 20 amp circuit?
**A. Yes.**

Q. What thickness of sheetrock should be used for the recessed installation?
**A. 1/2" or 5/8", thinner is recommended for tile facade.**

Q. How often do the batteries in the remote need to be replaced?
**A. Annually, possibly more with heavy use.**

Q. Is there a remote receiver in the fireplace that requires batteries?
**A. No, only the actual remote requires batteries.**
**The rest of the fireplace runs entirely off of the main power supply.**

Q. How do I reset the unit?
**A. Turn power off at the breaker for 1 minute.**

Q. How do I install the Optional Wall Control and Wi-Fi App?
**A. Optional wall control & Wi-Fi app instructions available for download on Modern Flames' website**

# FCC CAUTION

This device complies with part 15 of the FCC Rules. Operation is subject to the following two conditions: (1) this device may not cause harmful interference, and (2) this device must accept any interference received, including interference that may cause undesired operation.

Any changes or modifications not expressly approved by the party responsible for compliance could void the user's authority to operate the equipment.

NOTE: This equipment has been tested and found to comply with the limits for a Class B digital device, pursuant to Part 15 of the FCC Rules. These limits are designed to provide reasonable protection against harmful interference in a residential installation. This equipment generates, uses and can radiate radio frequency energy and, if not installed and used in accordance with the instructions, may cause harmful interference to radio communications. However, there is no guarantee that interference will not occur in a particular installation.

If this equipment does cause harmful interference to radio or television reception, which can be determined by turning the equipment off and on, the user is encouraged to try to correct the interference by one or more of the following measures:

-- Reorient or relocate the receiving antenna.

-- Increase the separation between the equipment and receiver.

-- Connect the equipment into an outlet on a circuit different

from that to which the receiver is connected.

-- Consult the dealer or an experienced radio/TV technician for help.

To maintain compliance with FCC's RF exposure guidelines, this equipment should be installed and operated with minimum distance between 20cm the radiator your body: Use only the supplied antenna.

Note: The equipment is an electric fireplace

# DO NOT RETURN TO STORE!

## CALL US FIRST

For immediate help with installation, product information or
if your product arrives damaged, please call our toll free number at:

**1-877-246-9353**

(Monday - Friday, 8:00AM - 5:00PM, AZ Mountain Time)

Or email us at:

**customerservice@modernflames.com**

OUR STAFF IS READY TO PROVIDE ASSISTANCE

---

RPG BRANDS

RPG BRANDS FAMILY OF COMPANIES

MODERN FLAMES GRAND CANYON GAS LOGS WILDFIRE



Copyright © 2022 RPG Brands (Modern Flames). All rights reserved. Products and specifications subject to change without notice.
The product images shown are for illustration purposes only and may not be an exact representation of the product.