VIEWTECH BORESCOPES

VJ-4

MECHANICAL ARTICULATING
VIDEO BORESCOPE

USER MANUAL

TABLE OF CONTENTS

I	USER NOTICE	3
II	PRODUCT SPECIFICATIONS	6
III	PACKING LIST	8
IV	PRODUCT OVERVIEW	9
V	PART NAMES AND FUNCTIONS	10
VI	PREPARATIONS	11
6.1	The Case	11
	Removing The VJ-4 From The Case	11
6.2	Power Supply Preparations	11
	Removing Battery Compartment	11
	Opening / Loading The Battery Compartment	12
	External Charging	13
VII	MENU OPERATIONS & FUNCTIONS	14
7.1	Button Positions	14
7.2	Button Functions	15
7.3	Overview of Menu Functions	16
	Menu Functions	16
	LED Brightness	18
	Screen Brightness	18
	Display Ratio	18
	Distance	18
	Grid Measurement	20
	Image Browsing	20
	Zoom Function	20
	Image Rotation and Mirror	21
	Negative Color	21
	Image Freeze	21
	White Balance	22
7.4	System Settings Menu	22
	Language	23
	Date and Time	23
	Video Format	23
	Image Format	23
	Folders	24
	SD Card Management	26
	Update Software	26
	Hide Icons Delay	26
	Annotation and Review Settings	27
	Auto Shut Down Setting	30
	WiFi Setting	30
	Camera Temperature Setting	31
	USB Mode Setting	32
	About	32

TABLE OF CONTENTS CONT..

VIII	BASIC OPERATIONS	33
8.1	Initial Checks	33
8.2	Turning On / Off	33
8.3	Turning White / UV Flashlight On / Off	33
8.4	Inserting The Insertion Tube Into Machinery or Equipment	34
	Extracting The Insertion Tube	35
8.5	Recording Images	35
	Loading The SD Card	35
	Taking Still Images	36
	Recording Video	36
8.6	Image Playback	36
	Multi-Image View	36
	Full Screen View	36
8.7	Deleting Images and Videos	37
	Deleting Individual Images / Videos	37
	Deleting All Images / Videos	38
8.8	System Settings Image Review and Editing	39
	Image Review Icons	39
	Image Editing Icon	40
	Editing Individual Images	41
IX	STORAGE AND MAINTENANCE	46
9.1	Cleaning	46
	Cleaning The Insertion Tube	46
	Cleaning the OLED Touch Screen	46
	Cleaning the Base Unit	46
9.2	Repacking	46
9.3	Storage	46
X	TROUBLESHOOTING	47
10.1	Troubleshooting Guidelines	47
10.2	Repair	47
	PRODUCT WARRANTY & REPAIRS	48
	CERTIFICATIONS	49
	NOTES	50

I USER NOTICE

Please read this user manual carefully before operation.

⚠ WARNING

- Do not use or store in a place with explosives, a strong magnetic field or combustible gas.
- Unauthorized dismantling or modification of this borescope voids the warranty.
- Make sure the power is turned off before putting the instrument into the carrying case.
- Never touch the camera / LED module during or immediately after use. Contact may cause burns.
- Do not look directly at the light from the end of the insertion tube. It is extremely bright and can cause eye damage.
- If any abnormality is noticed during operation, stop using and turn off the borescope immediately.

ATTENTION

- **ONLY USE** this borescope within the approved operating temperature range.
- **DO NOT** use sharp objects or strong force when touching or tapping the OLED display. Too much force or using an object besides the provided stylus or fingertip could damage the screen.
- **DO NOT** over-torque, crease, twist or fold the insertion tube. Doing so could damage the articulation control wire assemblies and / or electrical wiring.
- **ONLY USE** the power adapter provided by ViewTech.
- **DO NOT** yank or attempt to forcefully remove the insertion tube if it becomes stuck inside the equipment being borescoped. When extracting the insertion tube from the inspection area, be sure that the bending section (distal tip of the insertion tube) is straight. Use the joystick to remove any angle before attempting removal. If the insertion tube becomes stuck during removal, gently rotate the joystick until it becomes free again.
- **AFTER USE,** center the joystick in order to straighten the bending section prior to storage. The borescope should always be stored with the bending section straight (do not force the bending section with your fingers – always use the joystick to adjust and straighten the bending angle.)

- **NOTE** the following regarding the tip of the insertion tube (bending section and camera module), which is the most delicate part of this video borescope.
- **DO NOT** impact the tip of the insertion tube while inserting or maneuvering inside the equipment being borescoped.
- **ONLY** manipulate the joystick gently. Rapid movement of the joystick while borescoping may cause abrupt impact with the machinery and result in damage to the camera module or articulation.
- **ONLY USE** the recommended alcohol solution when the lens is dirty or greasy and needs to be cleaned.
- **DO NOT** force the joystick! If there is unusual resistance to joystick movement while conducting an inspection, it is because there is physical resistance inside the inspection area. Trying to force the joystick in this situation will result in damage to the articulation control wires, the joystick assembly or to the equipment being inspected.
- **DO NOT** impact, press with excessive force or scratch the OLED display.
- **DO NOT** cover the unit with a plastic bag or other similar protective covering during use. It may cause the unit to overheat and damage the internal circuitry.
- **DO NOT** use or store the borescope in a high temperature, high humidity or high radiation environment.

BATTERIES AND BATTERY CHARGING

Follow the instructions below for battery care and proper charging, to prevent leakage, overheating, smoke, explosion, electric shock and burns.

⚠ DANGER

1. Only use batteries and chargers specially designed for this borescope: 18650B battery with PCB-protection (button top).
2. Be sure the batteries are placed into the chamber in the correct direction (+ /–).
3. Do not carry or store the batteries where they may collide with metal objects.
4. Always keep the batteries away from fire or other sources of intense heat, as it could cause an explosion.
5. Do not attempt to open or modify batteries, as this could lead to an explosion or fire.
6. Do not immerse the batteries in liquid of any kind.
7. Do not charge the batteries near an open flame, as it could lead to an explosion or fire.
8. Do not drop, puncture, impact or apply pressure to the batteries as it could lead to an explosion or fire.

⚠ WARNING

1. Use only 3.6V lithium batteries, model 18650B with PCB-protection (button top).
2. Submit a repair request immediately in case of battery leakage, discoloration, deformation or abnormal condition.
3. Clean immediately with tap water if your skin or clothing comes into contact with a leaking battery.
4. Keep the battery charger free of any covering during charging.
5. Do not charge the batteries in the vicinity of flammable gas or materials.

ATTENTION

1. Do not use or store the batteries or borescope in a high-temperature environment, such as direct sunlight, closed cars or near heating equipment.
2. The batteries will heat up during prolonged operation. Do not remove immediately after use, as this could cause burns.
3. Keep batteries and borescope out of the reach of children.
4. Do not touch the battery electrodes with wet hands.
5. Fully charge the batteries before use and after extended use.
6. Remove the batteries from the borescope if the scope will not be used for more than 30 days, otherwise, it may cause damage to the borescope, fire or personal injury.

REMINDER

1. These are high-output batteries. Please use the batteries properly or it may cause damage from leakage or excessive heat. Always check the orientation / polarity and load batteries into the chamber correctly.
2. Batteries performance will decrease as the ambient temperature drops. Performance will be restored once the ambient temperature rises.
3. Recycle the batteries in accordance with local regulations at the end of their useful life.
4. Recommended temperature range for this lithium ion battery is:
   - *Discharging (in use):* 0°C to 40°C (32°F to 104°F)
   - *Charging:* 0°C to 40°C (32°F to 104°F)
   - *Storage:* -10°C to 40°C (14° to 104°F)
5. Using, charging or storing the batteries at a temperature out of the above range will reduce the battery performance and service life.
6. Be sure to remove the batteries from the borescope for long term storage.

II PRODUCT SPECIFICATIONS

Insertion Tube	Outer Diameter
	Length
	Exterior Material
	Chemical Compatibility
	Articulation Range
Optics	Field of View
	Depth of Field
	Effective Pixels
	Illumination Method
	Illumination Output
Base Unit	Display Monitor
	Articulation Control
	Brightness Control
	Control Buttons
	Playback
	Audio / Microphone
	Internal storage
	Data I / O ports
	Batteries
	Operating Method
	Dimensions
	Weight
Menu Functions and Options	User Interface
	File Management
	Image Control
	Image Format
	Video Format
	Language
Operating Limits	Run Time
	Operating Temp. Base Unit
	Operating Temp. Insertion Tube
	IP Rating, Insertion Tube

2.8mm	3.9mm	6.0mm
2.8mm	3.9mm	6.0mm
1.0m	1.5m, 3.0m	1.5m, 3.0m, 5.0m, 8.0m
Tungsten EasyGlide, crush-resistant		
Water, machine oil, heating oil, diesel, 3.5% saline concentrate		
360° around, 140±10° backward	360° around, 180±10° backward	360° around, 160±10° backward
84.8° x 84.8°	90° x 72°: 120°	80° x 60°: 100°
3.0mm - 50.0mm	8.0mm–100.0mm	7.0mm - 80.0mm
	2,000,000 pixels	
4 Super high-intensity white LEDs	6 Super high-intensity white LEDs	
≤ 4,000lux	≤ 6,000lux	≤ 20,000lux
5.5'' OLED touch screen		
Thumb-actuated, mechanical rocker		
10-step LED brightness adjustment		
Two multi-function mini joysticks and left / right buttons		
Photos, videos (w / wo audio), thumbnail view		
3.5mm port		
32 GB SD Card | 10,000 photos, 8 hours video		
SD card, HDMI, USB Type C		
Two 18650B PCB-Protected Li-ion batteries (rechargeable)		
One handed, portable		
13.6" x 6.2" x 7.3"		
2.09 lbs. / .95 kg		
Pop-up menu operation, menu navigation, touchscreen		
Photo and video recording, playback, thumbnail preview, delete		
Image freeze, image flip, zoom in / out		
BMP, PNG or JPG		
AVI or MP4		
English, French, Spanish		
≤ 3 Hours		
-10 – 50°C, -5 – 122°F		
-20 – 60°C, -4 – 140°F		
IP67		

III PACKING LIST

	ITEM
1	VJ-4 video borescope
2	18650B Li-ion batteries (2 plus spares)
3	18650B Li-ion battery charger
4	USB cable
5	Micro USB-C cable
6	HDMI cable
7	AC / DC power adapter
8	32GB SD card + card case
9	User manual
10	Stylus pen
11	Shoulder strap

Fig. 3-2 *VJ-4 and Case With All Contents*

IV PRODUCT OVERVIEW

The VJ-4 articulating video borescope is a nondestructive visual testing instrument with integrated optics, illumination, image processing and joystick-actuated steering. It is used for the remote visual inspection of machinery, equipment and components. The VJ-4 facilitates the visual recording and photo documentation of an inspection of parts and areas of vital equipment that are otherwise inaccessible or that would require great effort and expense to access directly. The VJ-4 video borescope consists of an insertion tube with distally mounted camera / LEDs and base unit with control panel, OLED display monitor, power source and all necessary circuitry.

The VJ-4 is available in a variety of configurations suitable for different tasks, with insertion tubes of various lengths and diameters, as well as different light wavelengths: white, infrared or ultraviolet.

The video signal from the VJ-4 can be viewed on the integrated OLED touch screen display, on an external hard-wired monitor or via WiFi on a WiFi-enabled device.

Fig. 4-1 *VJ-4 Mechanical Articulating Video Borescope*

V PART NAMES AND FUNCTIONS

5.1 VJ-4 VIDEO BORESCOPE

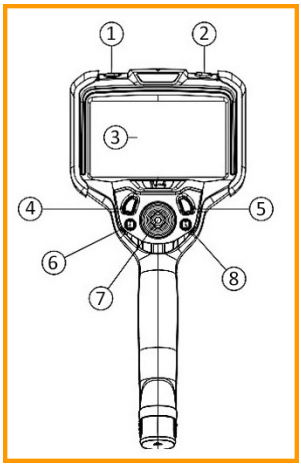

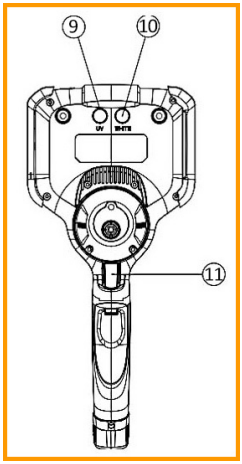

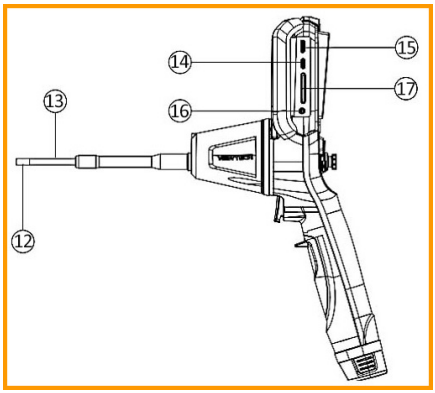

Fig. 5-1 *Part names of the unit*

1. Power On / Off Button
2. Flashlight Switch / On / Off Button
3. OLED Display
4. Left Control Button
5. Right Control Button
6. Left Mini-Joystick
7. Articulation Control Joystick
8. Right Mini-Joystick
9. UV Light Flashlight
10. White Light Flashlight
11. Photo Capture Trigger
12. Camera / LED Module
13. Insertion Tube
14. USB-C Port
15. HDMI Video Output Port
16. Headset / Mic Jack Port
17. SD Card Port

VI PREPARATIONS

6.1 THE CASE:

REMOVING THE VJ-4 FROM THE CASE

- Place the case flat on the floor, table or other stable surface.
- After opening the case, first remove the insertion tube from the case, handling it gently.
- After the insertion tube is remove, use your other hand to grip and remove the base unit

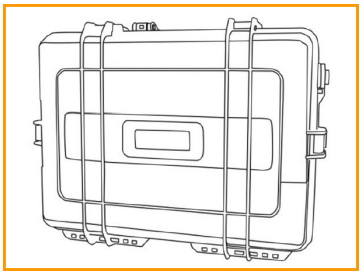

Fig. 6-1 *The VJ-4 case*

6.2 POWER SUPPLY PREPARATIONS

REMOVING BATTERY COMPARTMENT

Using your thumb and forefinger, press the two buttons on the sides of the battery chamber compartment at the base of the handle and gently remove the battery compartment from the handle. (Fig. 6-2).

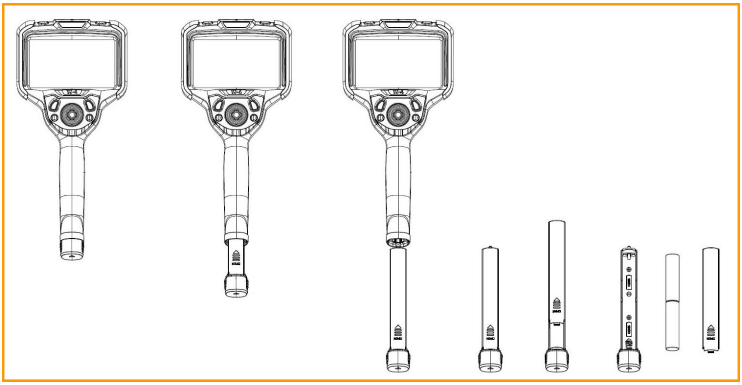

Fig. 6-2 *Removing the battery compartment*

OPENING / LOADING THE BATTERY COMPARTMENT

Press and hold the battery compartment unlock button according to the arrow instructions and take out the battery compartment (see Figure 6-3). Install the 18650 batteries in the compartment, aligned with the positive and negative indicators.

- The batteries cannot be placed in reverse polarity.
- Two 18650B Li-ion batteries are required.
- When batteries no longer hold a charge, replace batteries with new 18650B Li-ion batteries with PCB-protection circuit.

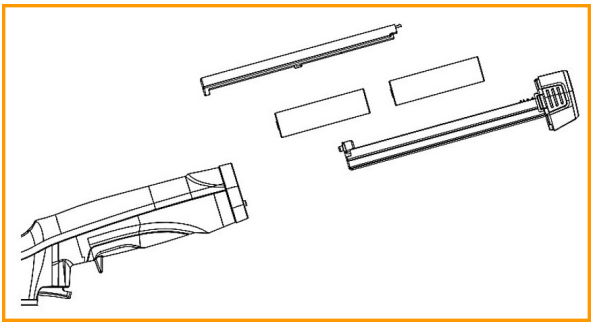

Fig. 6-3 *Opening the battery compartment*

⚠ WARNING

- The batteries cannot be charged while still in the borescope.
- Use only the supplied AC power adapter for recharging the battery—input of 100-240 V (50 / 60 Hz) AC. The adapter output voltage is 12V with an electric current of 3A.
- Use of an adapter that does not comply with the above specifications could cause fire, electrical shock or damage to the batteries and / or borescope and will void the warranty.

EXTERNAL CHARGING

Load the 18650B Li-ion batteries into the battery charger with the positive end toward the top of the charger.

Plug the charger into a standard wall outlet.

The charging is finished when the charger shows 100% for each battery.

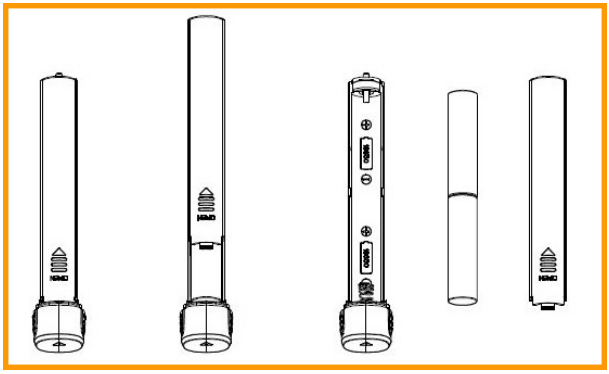

Fig. 6-4 *Battery compartment*

ATTENTION

- Ensure the batteries are correctly loaded into the charger.
- The charger has built-in circuitry to prevent over-charging, however the batteries should be removed from the charger and placed back into the carrying case or the borescope after they are fully charged.

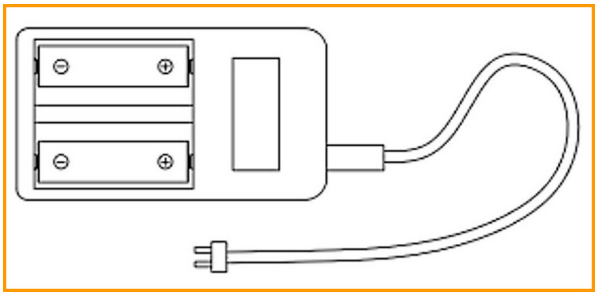

Fig. 6-5 *Battery charger*

VII MENU OPERATIONS & FUNCTIONS

7.1 BUTTON POSITIONS

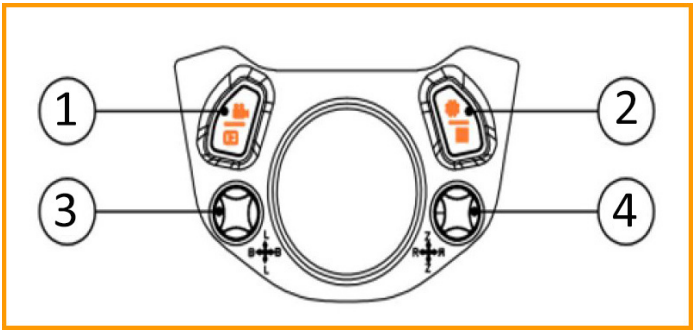

Fig. 7-1 *Button Diagram, front view*

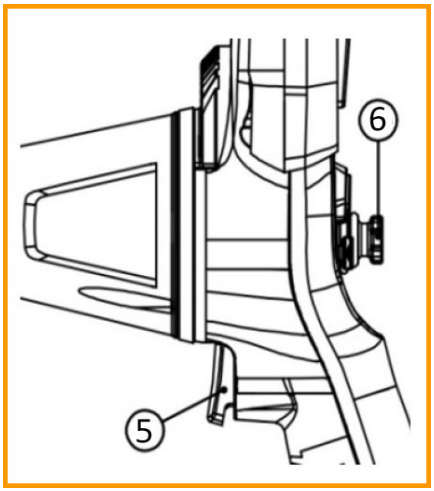

Fig. 7-2 *Button Diagram, side view*

1. Left Control Button
2. Right Control Button
3. Left Mini-Joystick
4. Right Mini-Joystick
5. Photo Capture Trigger
6. Articulation Control Joystick

7.2 BUTTON FUNCTIONS

	Left Control Button Short Press - start / stop video recording Long Press - video / image playback Cancel / Exit from system setting mode
	Left Mini-Joystick . Move Up / Down -adjust LED brightness level Move Left / Right -adjust screen brightness Press down on the center to confirm a selection Also used to navigate through menu or system settings mode
	Right Control Button Short Press - switch between live image mode and menu navigation mode Long Press - enter the system settings mode Select / OK prompt in system settings mode
	Right Mini-Joystick Move Up / Down -image zoom in / out Move Left / Right -image flip / mirror Press down on the center to switch to default setting or confirm a selection
	Photo Capture Trigger Short press - take a photo / capture a photo during video Long Press - switch camera

7.3 OVERVIEW OF MENU FUNCTIONS

7.3.1 MENU FUCTIONS

After powering on the VJ-4 video borescope, the Live Image Mode screen will appear. To view all available functions in the Menu Navigation Mode, tap the screen or press the right control button. For instructions on how to change the time delay for hiding the icons, go to page 26 (Icon Hide Display). To enter the System Settings Mode, tap or press the gear icon located on the bottom right of the Menu Navigation Mode

Fig. 7-3 *Live Image Mode*

Fig. 7-4 *Menu Navigation Mode*

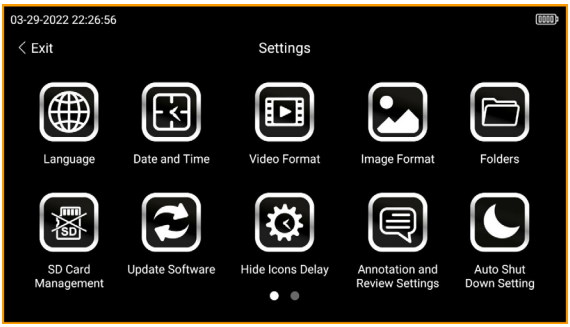

Fig. 7-5 *System Settings Mode*

7.3.1 MENU FUCTIONS CONTINUED

Press the Right Control Button or tap the screen to access all Menu Functions while in Live Image Mode.

To change settings for icons on the left side of the Live Image Mode screen, use the left mini-joystick to toggle between them and then press down on the left mini-joystick or use the touch screen option to make a change / selection. To change settings for icons on the right of the Live Image Mode screen, use the right mini-joystick to toggle between them and then press down on the right mini-joystick or use the touch screen option to make a change / selection.

	LED Brightness		Zoom Function
	Screen Brightness		Image Rotate and Mirror
	Display Ratio		Negative Color
	Distance		Image Freeze
	Grid Measurement		White Balance
	Image Browsing		System Settings

LED BRIGHTNESS

The LED brightness level ranges from 1-10, with the default level set to 5.

SCREEN BRIGHTNESS

The screen brightness level ranges from 1-10, with the default level set to 5.

DISPLAY RATIO

There are three options for display ratio: 16:9, 4:3 and 1:1.

DISTANCE

There are four modes available for distance:

	Middle Range Mode - used for general distance inspections
	Close Range Mode - used for near distance inspections
	Far Range Mode - used for far distance inspections
	User Defined - users define and set the camera settings

DISTANCE CONTINUED

When User Defined Distance Mode is selected, the user can manually change color and exposure settings in two tabs. In the Camera Color setting tab the user can adjust Brightness, Contrast, Hue, Saturation, Sharpness, Gamma and Gain. In the Exposure Control setting tab the user can adjust the Exposure Time.

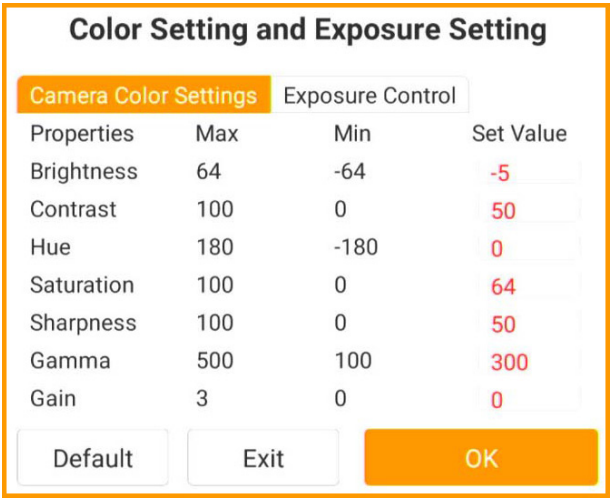

Fig. 7-5 *User Defined Camera Color Settings*

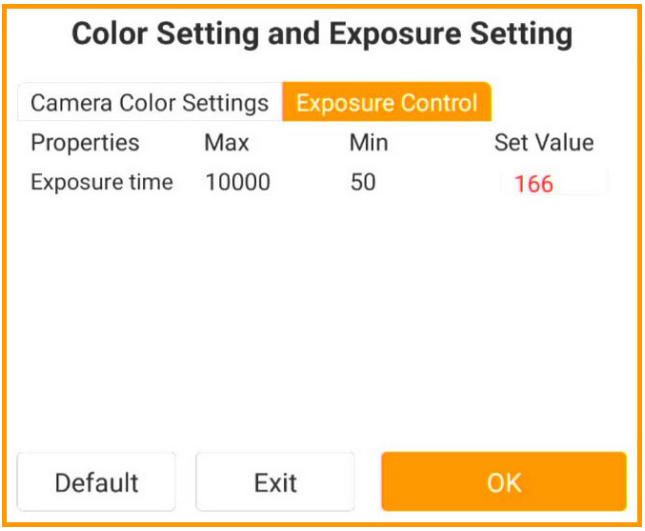

Fig. 7-6 *User Defined Exposure Control Settings*

GRID MEASUREMENT

This menu option allows for three different size grids to assist with estimating the dimensions of a specific object on the screen.

	No grid selection
	20mm grid
	10mm grid
	5mm grid

IMAGE BROWSING

To view saved images and videos, select the image browsing icon, then touch or toggle to the folder where the images and videos you would like to review are stored. See more details on Folder Management in the System Settings Menu section on page 24.

Fig. 7-7 *Folder and Image Management*

ZOOM FUNCTION

There are 10 different zoom ratios to choose from: 1.15, 1.30, 1.45, 1.60, 1.75, 1.90, 2.05, 2.20, 2.35 and 2.50.

IMAGE ROTATION AND MIRROR

The live image can be rotated and mirrored with several options available.

	This is the actual image and default setting
	This is 180-degree rotation of the actual image
	This is left and right mirroring of the actual image
	This is up and down mirroring of the actual image

NEGATIVE COLOR

This menu option is used to change between color or negative color.

	This is color
	This is negative color

IMAGE FREEZE

This menu option is used to freeze the image currently displayed. Select image freeze again to unfreeze the image. **CAUTION:** Do not move the insertion tube when the image is frozen. You will be unable to visually guide the camera with a frozen image.

	This is live image
	This is image freeze

REMINDER

- The frozen image may be blurry if it was captured while the camera / insertion tube was in motion.

WHITE BALANCE

This menu option allows for automatic white balance or manual white balance.

A WB	This is automatic white balance
M WB	This is manual white balance

7.4 SYSTEM SETTINGS MENU

The main interface of the System Settings Menu is displayed with two menu screens. To view the second menu screen, swipe the menu to the left or use the mini-joystick to toggle between icons / screens. To enter a setting screen, touch the icon or press down with the mini-joystick to select.

The System Settings Menu controls operational settings for the borescope with the following categories: Language, Date & Time, Video Format, Image Format, Folders, SD Card Management, Update Software, Hide Icons Delay, Annotation & Review Settings and Auto Shut Down Settings on the first screen. The second page of settings includes WiFi Setting, Camera Temperature Setting, USB Mode Setting and About.

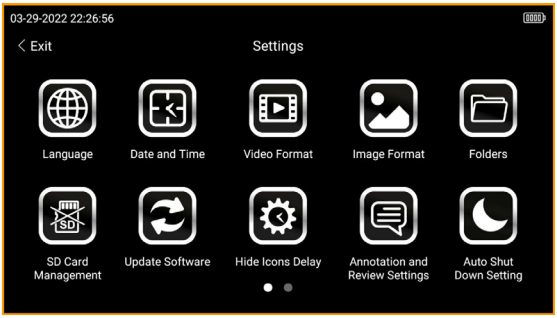

Fig. 7-8 *Icons displayed on the 1st System Settings Menu screen*

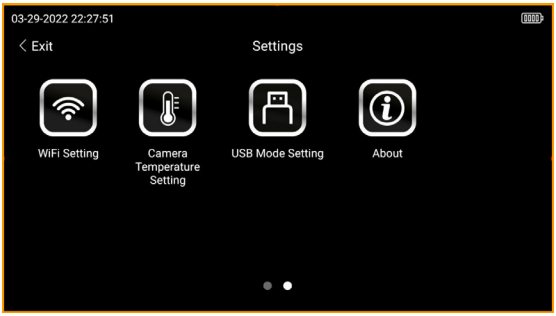

Fig. 7-9 *Icons displayed on the 2nd System Settings Menu screen*

LANGUAGE

Three different languages are available: English, Spanish and French.

Fig. 7-10 *Languages available*

DATE AND TIME

The date and time setting is divided into three formats, European, US and Chinese.

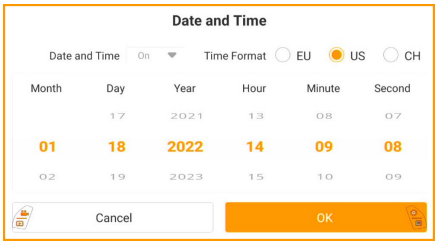

Fig. 7-11 *Date and time selection screen*

VIDEO FORMAT

Two options of video format are available and include AVI or MP4.

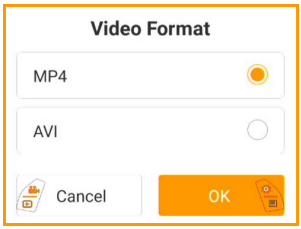

Fig. 7-12 *Video file formats available*

IMAGE FORMAT

Three options of image format are available and include JPG, PNG or BMP.
Note: BMP is the largest size and JPG is the smallest size.

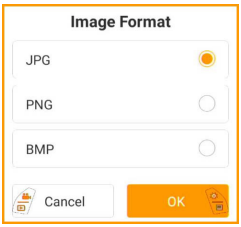

Fig. 7-13 *Image file formats available*

FOLDERS

This System Settings Menu option facilitates the management of folders to save images and videos, including creating, renaming, deleting or designating a default folder. To add a new folder, first select Create New Folder.

Fig. 7-14 *Main folder screen*

Next, the new folder will need to be named. After naming the folder, select OK to save.

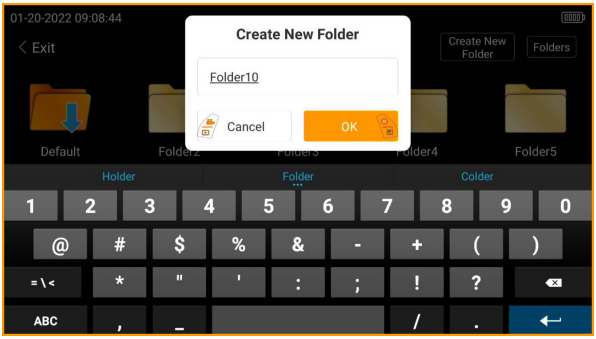

Fig. 7-15 *Prompt to add and name a new folder*

By selecting Folder, options available include: Rename, Delete or Make Active Folder.

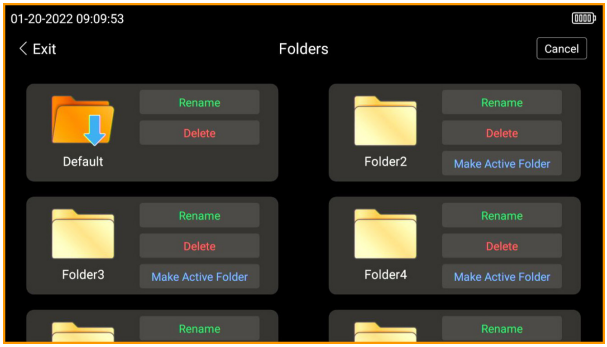

Fig. 7-16 *Folder management options*

By selecting Make Active Folder, this folder becomes the destination folder for future images and videos.

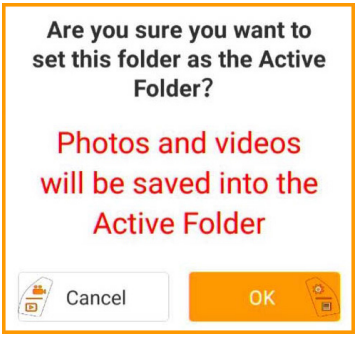

Fig. 7-17 *Prompt displayed when selecting a folder as the active folder*

By selecting Rename, the name of the folder can be edited or changed.

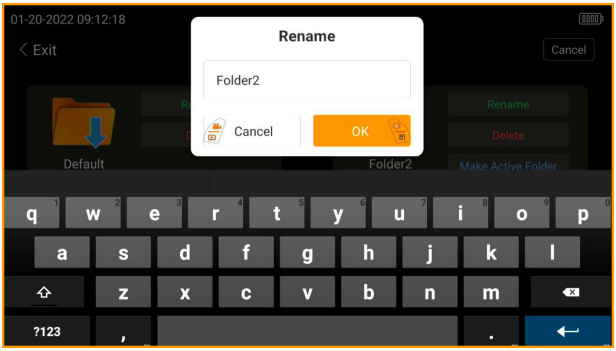

Fig. 7-18 *Prompt displayed when renaming a folder*

To delete a folder, select delete. Note: Folders and images / videos within the folder are not able to be restored after being deleted.

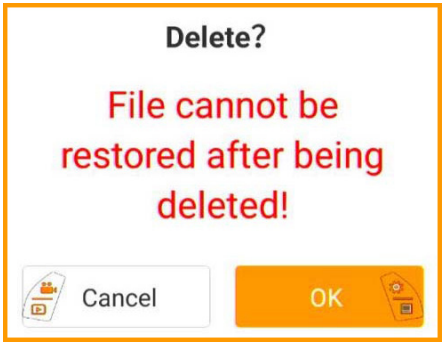

Fig. 7-19 *Prompt displayed when deleting a folder*

SD CARD MANAGEMENT

When reformatting the SD card, all files and folders are permanently erased.

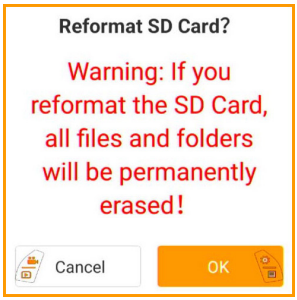

Fig. 7-20 *Prompt displayed when selecting to reformat the SD card*

UPDATE SOFTWARE

Periodic software updates may become available. This menu option should only be used at the direction of a ViewTech representative.

HIDE ICONS DELAY

In order to preserve as much display area as possible for viewing a live image, the icons on the Menu Navigation pane will automatically turn off after a set period of time of non-use. The hide icons delay will change the time it takes for the screen to switch from Menu Navigation Mode (all icons displayed on the main screen) to Live Image Mode (only four icons displayed on the menu screen).

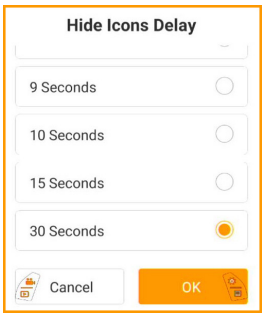

Fig. 7-21 *Prompt displayed when changing the time icons are hidden from main screen*

Fig. 7-22 *Menu Navigation Mode*

Fig. 7-23 *Live Image Mode*

ANNOTATION AND REVIEW SETTINGS

The VJ-4 video borescope allows custom annotation to be added to images and videos. The Annotation and Review Settings menu allows changes to the settings for photo annotation, video annotation and instant photo review time.

Image Annotation - By selecting yes, a dialog box will appear after capturing an image to ask whether or not you would like to add annotation to that image.

Image Review Time - Choose between 2 to 15 seconds for the annotation prompt to be visible If no selection is made within this time frame, the screen will automatically return to the live image mode.

Video Annotation - By selecting yes, a dialog box will appear before a video is recorded asking whether or not annotation should be added to the video. This annotation will appear during the recording and playback.

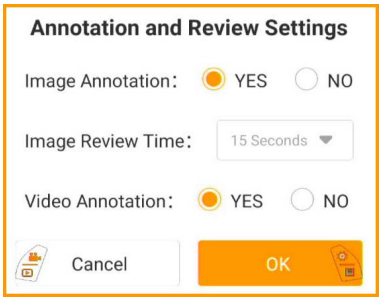

Fig. 7-24 *Annotation selection settings*

NOTE: If video annotation is set to No and image annotation is set to Yes, images captured while recording a video will prompt an annotation dialog box.

Use the touch screen to select No or Yes or press the Right Control Button to add annotation or the Left Control Button to return to the live image screen. When selecting Yes, users are able to save frequently used annotations, add new annotations, delete saved annotations or change the annotation font settings.

Fig. 7-25 *Annotation dialog box*

ANNOTATION SETTINGS CONTINUED

To create a new annotation, select the plus icon. A keyboard will appear where the text can be added. After typing the annotation desired, touch OK or press the Right Control Button to save. Use the drop down arrow to select a previously saved annotation.

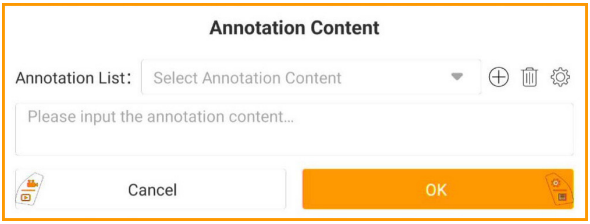

Fig. 7-26 *Adding a new annotation*

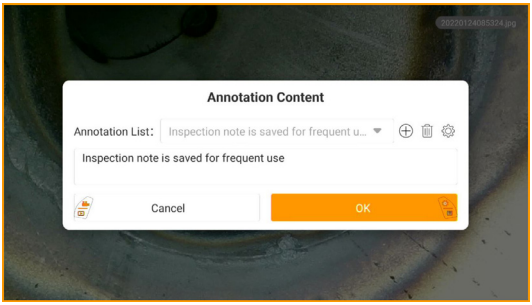

Fig. 7-27 *Saving a new annotation*

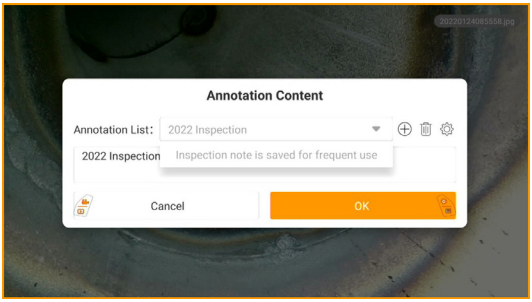

Fig. 7-28 *Select previously saved annotations*

ANNOTATION SETTINGS CONTINUED

If previously save annotations need to be deleted, select the delete icon. The user is able to select one or select all annotations. Once all items that need to be deleted are selected, touch delete or press the Right Control Button to have them removed.

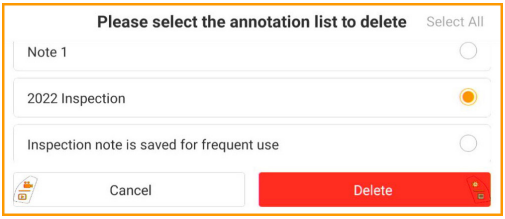

Fig. 7-29 *Delete previously saved individual annotations*

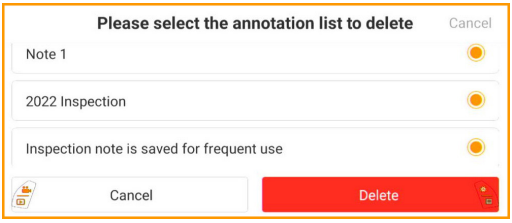

Fig. 7-30 *Delete all previously saved annotations with select all*

Tapping the settings icon will allow you to change the font size and color that is displayed with any future annotations.

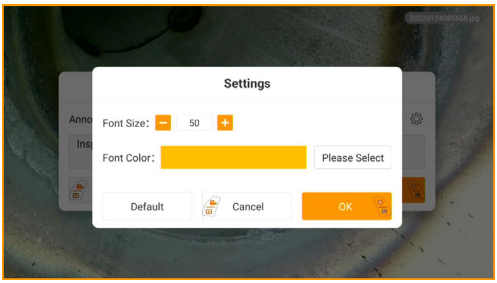

Fig. 7-31 *Annotation settings*

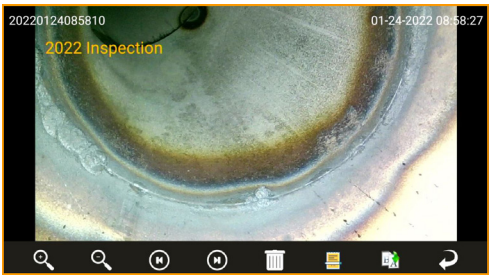

Fig. 7-32 *Text annotation is displayed on the image or throughout the video recording*

AUTO SHUT DOWN SETTING

The Auto Shut Down Setting allows the borescope to automatically power off when not in use. Select between Always On, 30 minutes, 1 hour, 1.5 hours or 2 hours.

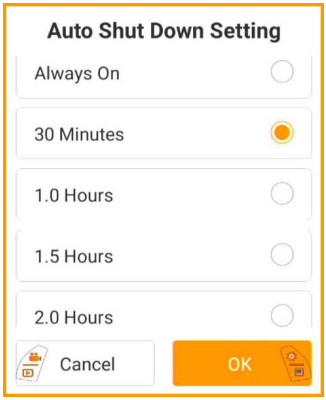

Fig. 7-33 *Auto Shut Down selection options*

WIFI SETTING

The WiFi setting enables the VJ-4 to be wirelessly connected to a WiFi-enabled device, such as a smartphone, tablet or computer. A WiFi streaming app must be loaded onto the device in order to display the image from the borescope. For iPhone users, the app called "Screensharing" can be found in the iPhone App Store at the following icon. You can also access this app directly by scanning the below QR code

For other devices, such as computers or Android-based phones and devices, please contact ViewTech for a list of suitable applications .

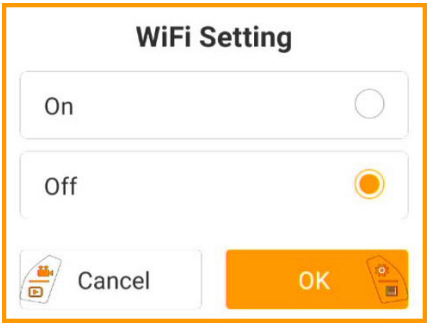

Fig. 7-34 *WiFi Setting selection*

CAMERA TEMPERATURE SETTING

The camera temperature setting is used to estimate the temperature of the distal tip and can be displayed on the live inspection screen when set to On. NOTE: This setting is accurate within .± 10oF (± 5oC). If this level of accuracy is not helpful or the display is distracting, it is recommended that this feature be turned off.

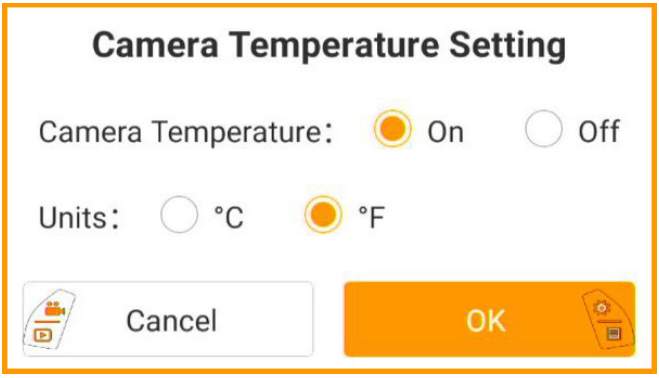

Fig. 7-35 *Camera Temperature Options*

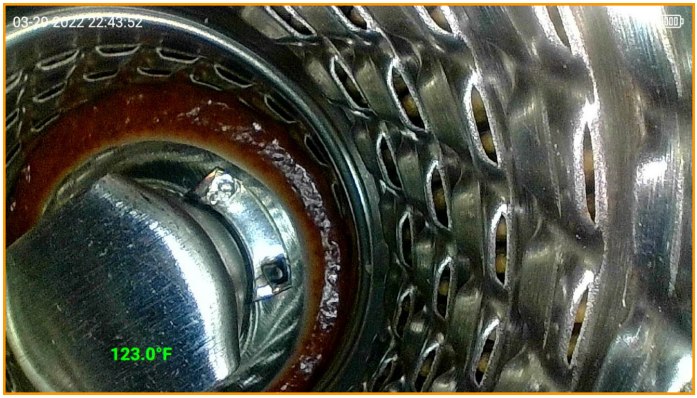

Fig. 7-36 *Estimated Temperature Displayed*

USB MODE SETTING

When the USB mode setting is set to Read SD Card Files, the image and video files will automatically be displayed when connected to a computer. If Inactive is selected, image and video files will not be displayed when connected to a computer. **NOTE:** powering off the borescope will return USB mode to the default setting of Read SD Card Files.

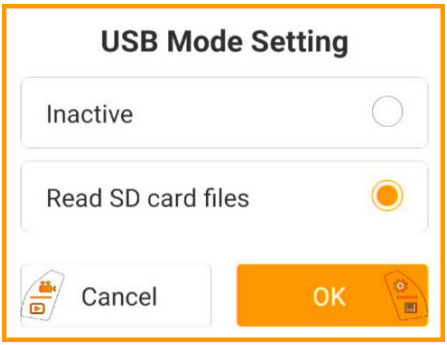

Fig. 7-37 *USB Mode Setting Options*

ABOUT

The About setting will display the current software version.

Fig. 7-38 *About setting display*

VIII BASIC OPERATIONS

8.1 INITIAL CHECKS

ATTENTION

Before turning on the borescope:

- Insert the SD card, otherwise all image capture and video recording functionality will be inoperative.
- Check the lens for any dirt, grime or debris. Clean as necessary, using the cleaning swabs provided, being careful not to flex the bending section while doing so.

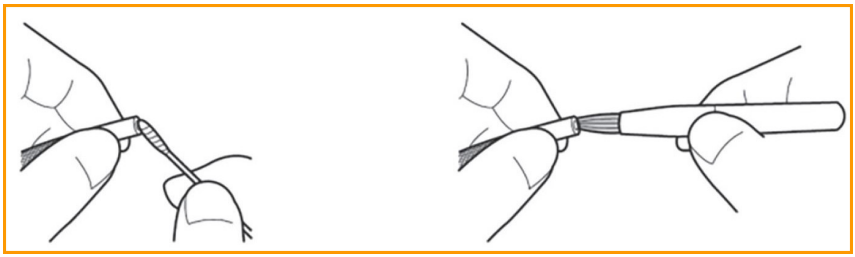

Fig. 8-1 *Cleaning the camera at the end of the insertion tube*

8.2 TURNING ON / OFF

Press the on-off button (see Fig. 8-2) near the top corner of the base unit. The borescope will power up and the LCD will display the real-time image captured by the camera / LED module.

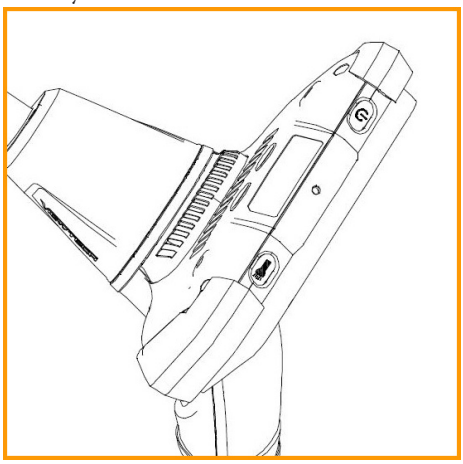

Fig. 8-2 *On / Off button and Flashlight button*

8.3 TURNING WHITE / UV FLASHLIGHT ON / OFF

When pressing the flashlight button adjacent to power on / off button, the lights on the rear of the VJ-4 video borescope switch between a white light flashlight, a UV flashlight and turning off the flashlight. NOTE: The UV has a center wavelength of 365nm and luminous power of 50mW.

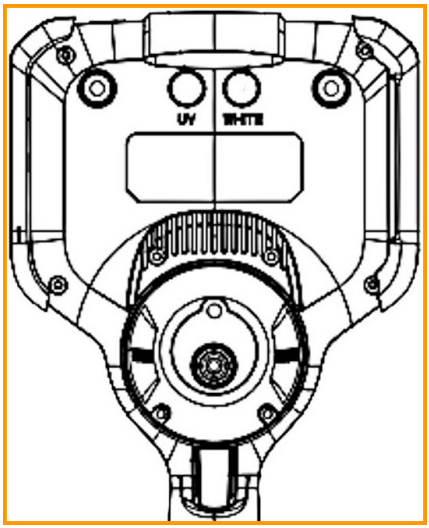

Fig. 8-3 *The white and UV flashlight location on the rear of the VJ-4*

Fig. 8-4 *A white icon is displayed when the white light flashlight is in use*

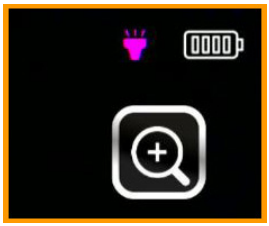

Fig. 8-5 *A purple icon is displayed when the UV flashlight is in use*

8.4 INSERTING THE INSERTION TUBE INTO MACHINERY OR EQUIPMENT

Inserting the insertion tube:

Make sure the insertion tube and bending section are straight before starting the inspection.

DO NOT attempt to articulate the bending section with the joystick while the insertion tube is coiled, as this will result in breakage of the articulation control wires.

- After the insertion tube enters the inspection port, adjust the brightness as necessary and use the LCD monitor to see the internal view.
- Manipulate the joystick as needed in order to steer the insertion tube and camera / LED module to the inspection target.

REMINDER

STOP IMMEDIATELY if the joystick control mechanism does not respond to normal inputs or any abnormality occurs during operation. Move the joystick to the center position and carefully extract the insertion tube from the inspection area.

8.4.1 EXTRACTING THE INSERTION TUBE

Move the joystick to the center / neutral position.

Withdraw the insertion tube slowly, being careful to hold on to it with one hand so that it does not drop after it exits the inspection access port.

WARNING

- Do not remove the insertion tube when the bending section is at an angle. Doing so could damage the bending section and / or the equipment being inspected.
- If the insertion tube becomes stuck during the extraction, gently rotate the joystick until it becomes dislodged and then pull the insertion tube out. Never yank or forcefully remove the insertion tube.

8.5 RECORDING IMAGES

Still images and video can be captured and recorded during live viewing mode and are stored on the SD card.

8.5.1 LOADING THE SD CARD

Open the rubber cover on the left side of the base unit.

Insert the SD card into the slot with the card's notch pointed toward the top of the base unit, then close the rubber cover.

REMINDER

- The SD card is not properly aligned if it does not slide smoothly into the slot. Please check the direction of the card and never use force.
- The file name will be automatically generated when saving images on the SD card.

Fig. 8-6 *SD card insertion*

8.5.2 TAKING STILL IMAGES

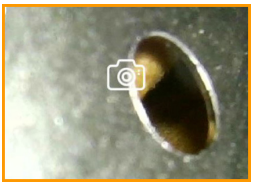

Fig. 8-7 *The camera icon displayed when a photo is captured*

When a live image is displayed, pull the trigger to capture a still image. A camera icon will appear in the center of the screen when a photo is taken.

While recording a video, pulling the trigger will capture an image without interrupting the video recording.

8.5.3 RECORDING VIDEO

Fig. 8-8 *The recording indicator and video time length displayed*

In live image mode, press the Left Control Button to start and stop a video recording. While a video is recording, the recording indicator and video time length is displayed on the bottom right of the screen.

While recording a video, pulling the trigger will capture an image without interrupting the video recording.

8.6 IMAGE PLAYBACK

There are two ways to access and view saved images and videos.

1. Pressing and holding the Left Control Button while in Live Image Mode allows the user to review all images and videos currently saved in the default folder.
2. To view all folders, along with the images and videos saved within the folders, select the Image Browsing icon in the Menu Navigation Menu.

8.6.1 MULTI-IMAGE VIEW

By selecting the Image Browsing icon and selecting a folder, all videos and images within that folder will be displayed as thumbnails. Use the Right Mini-Joystick or touchscreen to scroll between photos and images.

8.6.2 FULL SCREEN VIEW

While in multi-image view, select a picture or video to view by pressing the Right Mini-Joystick or by tapping the image or video on the screen with your finger or stylus. To play a video, press the playback button to start viewing the video.

While in Live Image Mode, pressing and holding the Left Control Button allows for images and videos to be viewed in full screen mode.

8.7 DELETING IMAGES AND VIDEOS

8.7.1 DELETING INDIVIDUAL IMAGES / VIDEOS

While in the Folder Management setting, by touching any folder and then selecting the Edit icon at the top right corner, a user is able to multi-select images and videos for deletion. After the selection is complete, touch Delete to remove the selected images and videos. A prompt will be displayed noting “File cannot be restored after being deleted!”. Select Ok to confirm or Cancel to exit.

While in Image Browsing mode, by touching the Delete icon, a user can delete an individual image or video. A prompt will be displayed noting “File cannot be restored after being deleted!”. Select Ok to confirm or Cancel to exit.

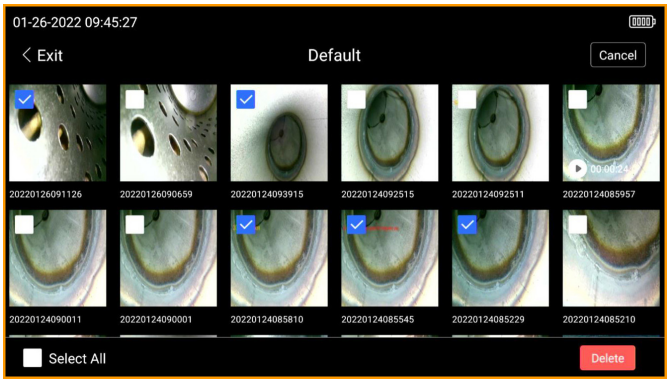

Fig. 8-9 *Selecting and deleting individual images and videos while in the Folder Management setting*

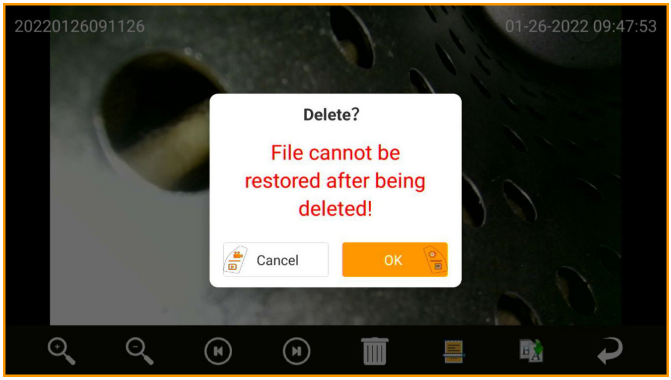

Fig. 8-10 *Selecting and deleting individual images and videos while in the Image Browsing mode with the Delete Icon*