PRETTYCARE

PRETTYCARE Robot Vacuum Cleaner User Manual R1 MAX

Thank you for choosing PRETTYCARE robot vacuum cleaner

Contents

01: Important Safety Instructions

04: Product List

05: Product Introduction

09: Installaton & Start

12: Connect to the APP

13: Instructions

17: Maintenance

20: Product parameters

21: Troubleshooting

Important Safety Instructions

Warning

• This product is only used for floor cleaning in the home environment, do not use it outdoors (such as open balconies), non-floor (such as sofas), commercial or industrial environments
• Do not use it in a suspended environment (such as duplex floors, open balconies, furniture tops) without guardrails
• Do not use or deposit in environments above 40°C, below 0°C, or in environments with any liquid and sticky substances on the ground
• Please hang up the ground cables at home before use to avoid dragging the cables when the vacuum cleaner is running.
• Please put away fragile items and sundries (such as vases, plastic bags, etc.) placed on the ground to avoid damage to valuables at home when the vacuum cleaner is blocked or slightly collided during operation
• Do not allow persons with physical, mental or sensory disabilities, including children, to use or operate this product.
• Do not use with damaged cord or plug. Do not use any other power supply cord. For replacement cords, please contact Customer Care to ensure proper selection of country specific power supply cord.
• Do not let children use the robot as a toy. Please supervise children and pets to keep them away when the it is working.
• Do not place the main brush cleaning tool in an area that can be touched by children.
• Do not place any objects (including children, pets) on the stationary or moving main unit.
• Do not sit or stand on the vacuum cleaner.
• Do not let human or pet hair, fingers and other parts close to the vacuum port of the machine when the it is working.
• Do not use to sweep any burning objects (such as unextinguished cigarette butts)
• Do not use for cleaning long-haired carpets (some dark-colored carpets may not be cleaned properly)
• Do not let the vacuum cleaner pick up foreign objects or sharp objects (such as decoration waste, glass, iron nails, etc.)
• Do not use the protective cover of the laser ranging sensor, the upper cover of the main unit and the collision buffer as a handle to carry the machine.
• Do not clean or maintain the main unit and the charging stand when the power is turned off or off.
• Use only manufacturer's recommended attachments.
• Do not wipe any part of this product with a damp cloth or any liquid.
• Please let all filters air-dry completely before reinstalling them to prevent liquid from being drawn into electric parts.
• Do not put any object into openings. Do not use with any opening blocked; keep free of dust, lint, hair, and anything that may reduce air flow.
• Prevent unintentional staring. Ensure the switch is the off-position before connecting to battery pack, picking up or carrying the application.Carrying the application with your finger on the switch or energizing application that have the switch on invites accidents.
•Do not handle charger, including charger plug, and charger terminals with wet hands.
• Do not use without dust bag.

Important Safety Instructions

Warning

• For use only with PRETTYCARE R1 MAX charger. Recharge only with the charger specified by the manufacturer.A charger that is suitable for one type of battery pack may create a risk of fire when used with another battery pack.
• Use appliances only with specifically designated battery packs. Use of any other battery packs may create a risk of injury and fire.
• Turn off the appliance before making any adjustments, changing accessories, or storing appliance. Such preventive safety measures reduce the risk of starting the appliance accidentally.
• When battery pack is not in use, keep it away from other metal objects, like paper clips, coins, keys, nails, screws or other small metal objects, that can make a connection from one terminal to another. Shorting the battery terminals together may cause burns or a fire.
•Under abusive conditions, liquid may be ejected from the battery; avoid contact. If contact accidentally occurs, flush with water. If liquid contacts eyes, additionally seek medical help. Liquid ejected from the battery may cause irritation or burns.
•DO NOT use in the following areas: a) Wet or damp surfaces.
b) Outdoor areas near fireplaces with unobstructed entrances.
c) Spaces that are enclosed and may contain explosive or toxic fumes or vapors (lighter fluid, gasoline, kerosene, paint, paint thinners, mothproofing substances, or. flammable dust).
d) In an area with a space heater.
e) Near fireplaces with unobstructed entrances.
• DO NOT use if robotic vacuum cleaner not working as it should, or has been dropped, damaged, left outdoors, or dropped into water.
Do not use a battery pack or appliance that is damaged or modified. Damaged or modified batteries may exhibit unpredictable behavior resulting in fire, explosion or risk of injury.
Do not expose a battery pack or appliance to fire or excessive temperature. Exposure to fire or temperature above 130°C (266°F) may cause explosion.
• Follow all charging instructions and do not charge the battery pack or appliance outside of the temperature range specified in the instructions. Charging improperly or at temperatures outside of the specified range may damage the battery and increase the risk of fire.
• Have servicing performed by a qualified repair person using only identical replacement parts. This will ensure that the safety of the product is maintained.
• Do not modify or attempt to repair the appliance or the battery pack except as indicated in the instructions for use and care.
• Place the cords from other appliances out of the area to be cleaned.
• LASER WARNING: THIS PRODUCT HAS A CLASS 1 LASER. IT IS SAFE UNDER REASONABLY FORESEEABLE CONDITIONS (AS DEFINED IN THESE INSTRUCTIONS.) ALWAYS TURN OFF THE POWER BEFORE LIFTING THE ROBOTIC VACUUM CLEANER OR PERFORMING ANY MAINTENANCE ON IT. DO NOT LOOK DIRECTLY INTO LASER.
• Please use this product in accordance with the instructions in the manual, any loss and injury caused by improper use shall be borne by the user.

Important Safety Instructions

Warning

1. Battery

Important: batteries and products containing batteries are subject to strict transport regulations. If the product (including batteries) needs to be transported for long-term storage, travel, or any other reason, the following shipping instructions must be followed:

• Remove the battery from the robot.
• Apply a piece of insulating tape to the electrodes of the battery.
• Reinsert the battery with the tape and close the battery cover.
• When shipping, pack the product in its original packaging or suitable packaging.
• Can only be shipped by land, not by air.

2. Storage battery

• If the product needs to be stored for a long time, please remove the battery first.
• Battery removal steps:
① Turn the machine over to the back.
② Use a screwdriver or other suitable tool to remove the two battery cover screws.
③ Take out the battery cover.
④ Take out the battery.
• Store the product and battery in a cool, dry place.

3. Remove the battery

• Before disposing of the appliance, the battery must be removed from the appliance.
• The appliance must be switched off when removing the battery.
• Batteries should be disposed of safely.

Product List

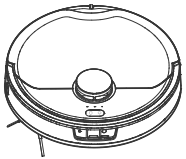

Main Body

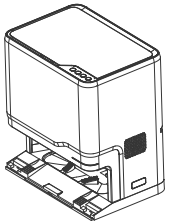

Station

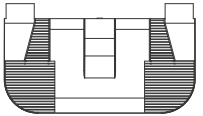

Station Board

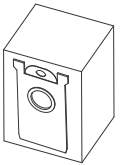

Dust Bag

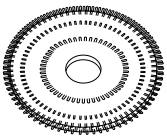

Mop

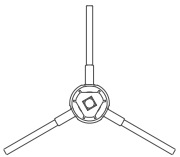

Side brush

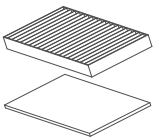

HEPA & Sponge

Cleaning Brush

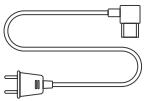

Power Cord

Product Introduction

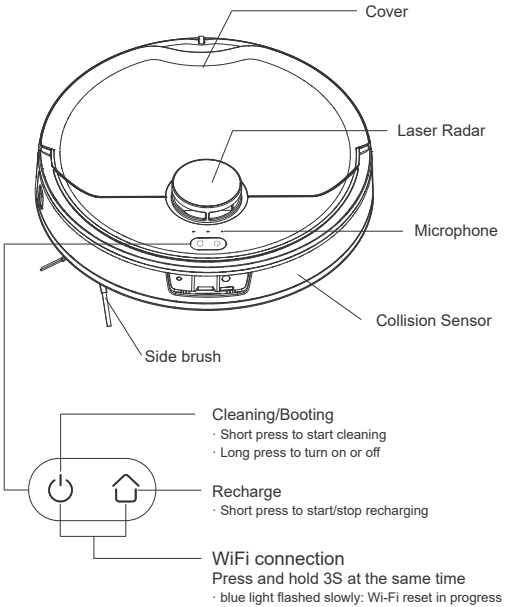

Main Body

State	Starting light	Recharging light
WiFi connection	blue light flashed slowly	blue light flashed slowly
Booting	blue light breathing	blue light breathing
Standby	blue light always on	blue light always on
Fault	red light flashing	red light flashing
Recharging	Light off	blue light always on
Charging	light off	blue light always on
Full charging	blue light always on	blue light always on
Updating	blue light flashing	light off
Turning off	light off	light off
Dormant	light off	light off

Note: Press any key to stop during cleaning or recharging.

Product Introduction

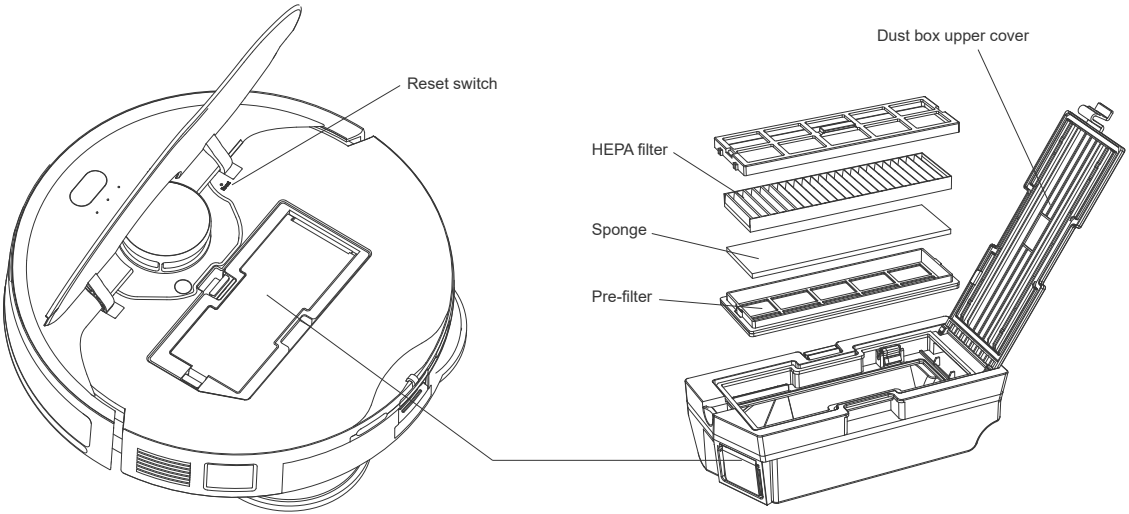

Main Body **Dust Box**

Product Introduction

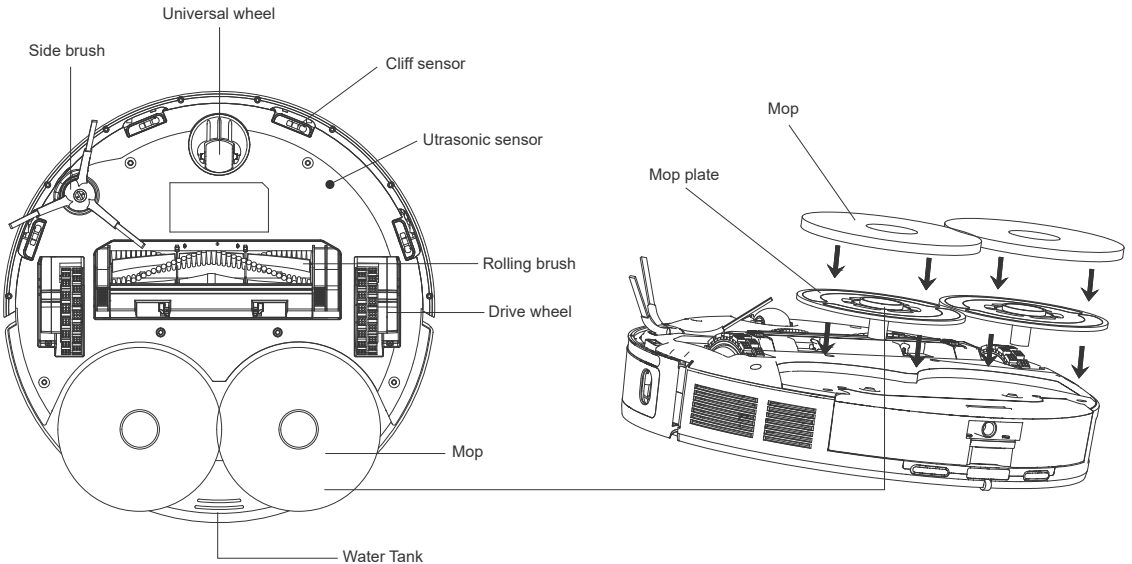

Main Body

Product Introduction

Charging Station

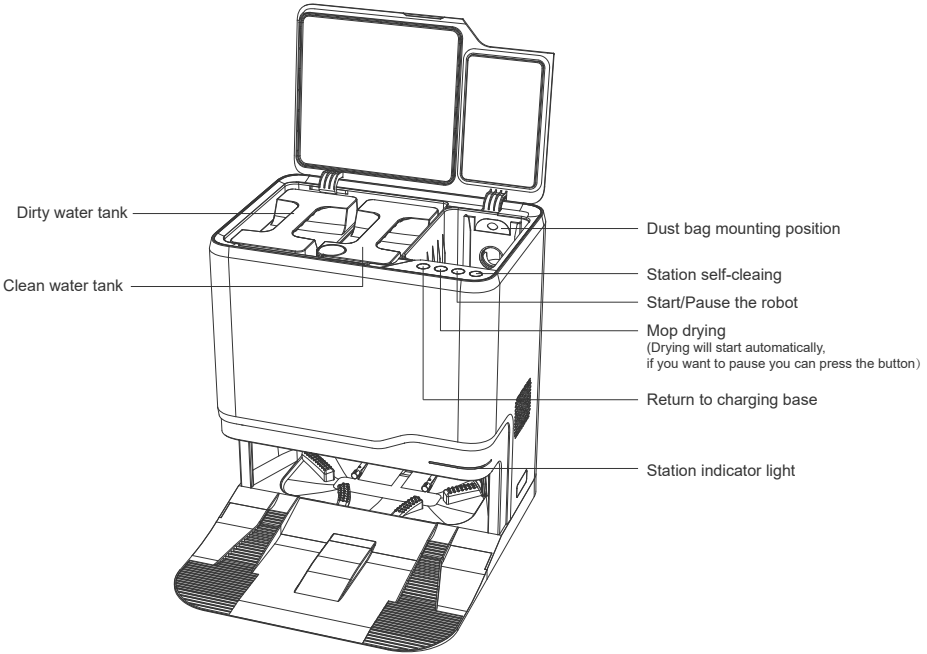

Installation & Start

1. Tidy cables and loose items from the ground and move any unstable, fragile, or dangerous objects to prevent personal injury or property damage due to things becoming tangled in, steuck by, or knocked over by the robot

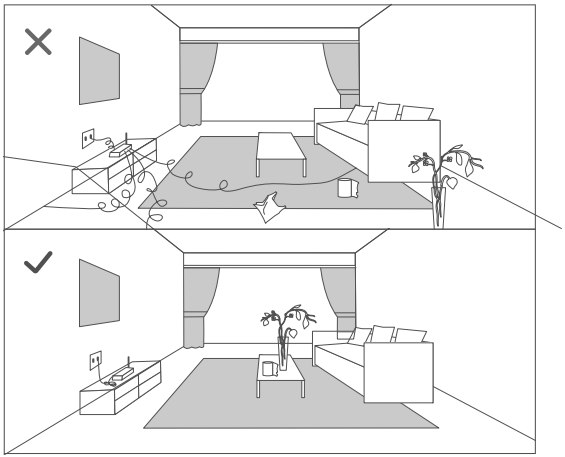

2. If using this robot in raised areas(e.g. balconies, stairs, etc.), always use a safe physical barrier to prevent accidental falls that could lead to personal injury.

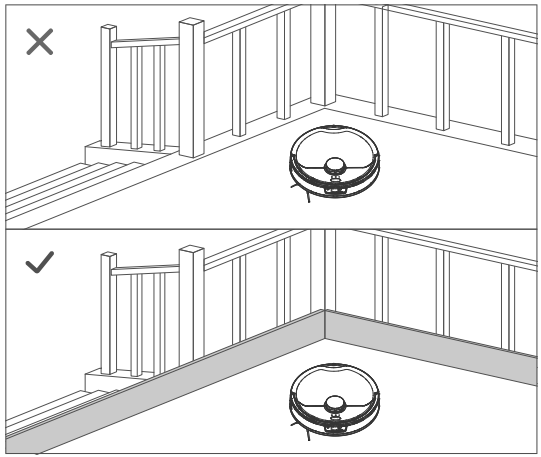

Note: When using the robot for the first time. follow it throughout its whole cleaning route and watch for major obstacles.The robot will be able to clean by itseif in future uses.

Installation & Start

1. Press the station board up to the slots on both sides of the station.
When you hear a click, it is installed in place, and then press other positions slightly to ensure the base plate is completely attached to the ground.

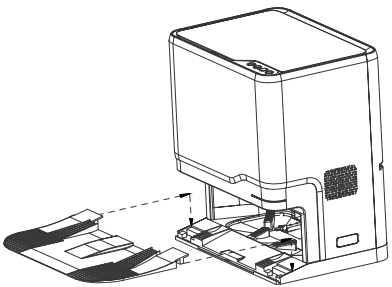

2. Place the base station against wall on flat floor in an area with **good Wi-Fi coverage**. Make sure there is at least **1.6ft/0.5m of space on both sides and at least 4ft/1.2m of space in front and WiFi signal is in good condition** and then turn on the power.

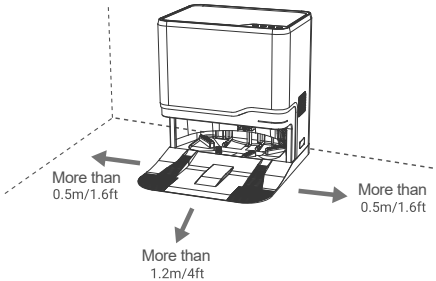

3. After placing the clean water tank, dirty water tank and dust bag according to instruction, plug in the power cord. After the base station is powered on. the white indicator light will be always on.

Tips: The Clean Water Tank needs to be filled with water manually.

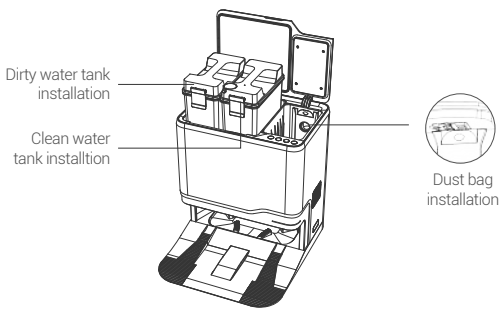

Installation & Start

(1) Before using, please remove the spacing pieces,

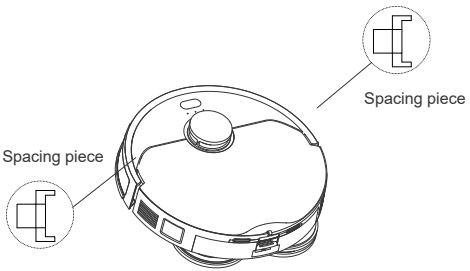

(2) Power on/off

• Long pressing the button ⏻ to turn on the robot and the blue light breathes and the robot enters the boot process. When the blue light is always on, then the boot is completed.

• When the robot is in standby, press and hold the button ⏻ to shut down. When the light is off, then the shutdown is completed.

Note: The robot cannot be turned off during charging.
Before using the mopping function, the water tank in the base station needs to be manually filled with water.

Charging

Method 1: Manually put the robot back to the base station for charging, and the robot will prompt "charging".

Method 2: Press the button ⌂ on the robot to activate the automatic recharging mode, and the robot will automatically return to the base station for charging.

Method 3: Press the button ⌂ on the Base Station to activate the automatic recharging mode, and the robot will automatically return to the base station for charging.

Method 4: Click the recharge button on the APP to activate the automatic recharge mode, and the robot will automatically return to the base station for charging.

Warm Tips:
• **Please fully charge the robot when you use it for the first time.** It takes about 5~6 hours to fully charge.

• In order to facilitate the return of the robot to the base station, please let the robot **start from the base station**, and do not move the base station.

• Please ensure that there is at least 1.6ft/0.5m of space on either side of the base station and at least 4ft/1.2m of space in front of the base station.

• When the power of the robot is low and cannot be turned on, please manually put the robot directly into the base station for charging.

• To maintain battery performance, keep the robot charged during daily use.

Connect to the App

Download the APP

(1)Scan the QR code or search for "PE HOME" in "APP Store" or "google play" to download the APP.

(2) Press and hold the ⏻ button and ⌂ button of the robot vacuum at the same time for 3S to enter the network connection mode, the button light flashes slowly and there is a voice prompt.

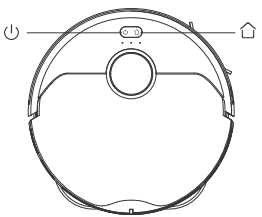

Tip:If you have any problems with the process, please feel free to contact PRETTYCARE Service Support.

(3)Enter the home page of APP, click "+" in the upper right corner and add device according to the APP prompt. The device will show in the home page list after successfully added.

Instructions

Press and hold the button ⏻ for a few seconds, the robot button light will turn on, and wait for the completion of the startup voice prompt, then you can control the robot to work.

(1)Auto Cleaning

① Press the ⏻ button of the robot vacuum to start the cleaning mode, and the robot starts to clean.

② Press the ⏯ button of the charging base lightly, and the robot starts to clean.

③ There are three cleaning modes available for the APP :

• Sweeping mode: the robot enters sweeping mode, automatically returns to the base station to empty dust after cleaning.
• Mopping mode: the robot enters mopping mode, automatically returns to the base station after the mopping.
• Sweeping and Mopping mode: the robot enters sweeping and mopping mode, automatically returns to the base station to empty dust and then clean the mop.

Note:
The robot will enter drying mode after each cleaning.(The drying time takes about **two hours**,and if you want to pause or abort the drying, press the Drying Button on the base station)

Note:
• If the power is too low, the cleaning task cannot be performed, please charge it before starting the cleaning;
• If the power is too low during cleaning, the robot returns to the charging dock for recharge and resumes cleaning where it left off.

(2)Scheduled Cleaning

Set the scheduled cleaning time on APP. The robot will automatically start cleaning at the time you set and return to the charging base after cleaning.

Note:
During the scheduled cleaning period, the robot will not automatically renew the cleaning and prompt.

(3)Smart Area

① **Area Cleaning**
After Smart Map generated successfully, you can add an adjustable size and location cleaning area. The robot will only clean the selected area.

② **Designated Room Cleaning**
After Smart Map generated successfully, you can divide the map into different areas according the cleaning needs. You can set one or more cleaning areas. The robot will only clean the selected area.

③ **No-go Zone**
You can set areas **you don't need to clean or don't want it to enter** as "no-go areas" via the app (e.g. bathrooms, areas you don't want to disturb, areas with wires and fragile items on the floor, etc.) and the vacuum robot won't enter the no-go areas.

Note:
• Please make sure the robot has generated the smart map. The No-go zone will be lost when the map is rebuilt.
• The No-go zone may be lost due to changes in the location of the self-empty station or furniture. So please try not to move or interfere with the Robot while it is working.

*Due to the continuous development and upgrade of APP, there may be slight adjustment of functions and details, please refer to the actual version.

(4)Pause

When the robot is in the cleaning mode, press any key to pause the cleaning, press the ⏻ key and the robot will continue to clean, press the ⌂ key and the robot will return to the base station and end the cleaning.

(5)Docking Mode

Auto mode：When the battery power is low, the robot will prompt“Low power, start docking mode”, and returns to the base station for recharge.

Manual mode: In standby mode, press the back button ⌂ on the robot or the base station, or click the back button on the APP. After the voice prompt“Start docking mode”, the robot will automatically return to the base station to charge.

(6)Troubleshooting

When an abnormality occurs during the operation of the robot, the indicator light flashes red quickly and there is a voice prompt. It is in the fault state. For the solution, please refer to "Troubleshooting"

Note: If you cannot resolve the problem yourself, please feel free to contact PRETTYCARE service support.

(7)Power Off

No operation on robot long time, please press ⏻ button few seconds to switch off robot (Robot in standby state over 12hrs, it will shut down automatically).

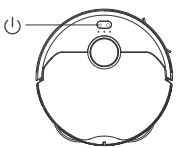

(8)Reset Wi-Fi

When the router changes the configuration or you forget the password or the mobile phone fail to connect to the robot, please press and hold ⏻ and ⌂ at the same time until the voice prompts, wait for the indicator light to flash blue slowly to indicate that the reset is successful and follow the APP prompts to connect the WiFi.

(9)Do Not Disturb Mode

Through the APP control, you can manually switch on and off Do Not Disturb Mode or modify the period of Do Not Disturb. During the period of Do Not Disturb, the robot will not automatically continue to scan and actively play voice.

(10)Cleaning mode

Through the APP control, you can choose quiet, standard, strong and super strong modes, and the default is the standard mode.

(11)Dormant mode

No operation for more than 10 minutes, the robot will automatically enter hibernation state to save energy. In dormant state, the indicator lights off, and you can press any key to wake up the robot.

Instructions

(12)Virtual Wall

Virtual walls can be used to isolate areas that you do not want to be cleaned (such as toilets with water or places where the robot may get stuck). Please tile the virtual wall along the entrance in areas where you do not want the robot to enter and clean.

Note: Please fix the virtual wall to the ground to prevent separation, otherwise the effect of the virtual wall will be affected.

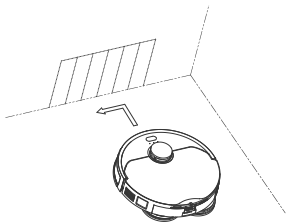

Note: Please arrange the virtual wall on the same plane as the robot runs.

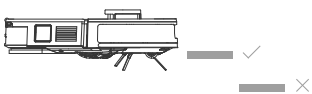

Instructions

Clean Mode

(13)Base Station Washing Robot

① When the robot performs the cleaning task of sweeping and mopping, in order to ensure the cleanliness of the mop, it will periodically return to the base station to clean the mop and replenish the water in the robot's water tank.
② After the cleaning task is over, the robot will automatically return to the base station for dust collection, mop cleaning, water injection and drying operations.

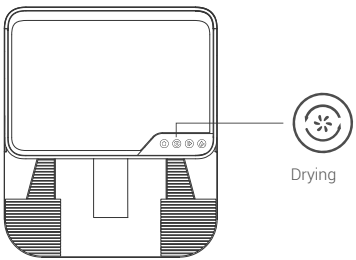

Tips: The robot will automatically switch on drying when it enters the base station (no need to press the drying button manually), if you need to pause, you can press the drying button.

Base station self-cleaning
Tap the self-cleaning button on the base station to activate the self-cleaning function of the base station. When the base station is self-cleaning, please use the cleaning brush to assist in cleaning the base station cleaning slot.

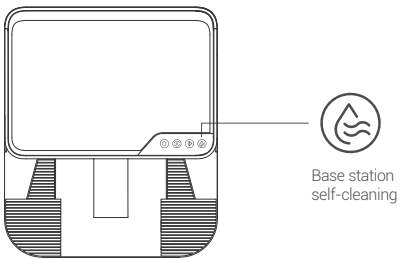

Tip: When you press to start base station self-cleaning, the robot will automatically leave the base station for 1 minute to allow the station to complete its self-clean.

Maintenance

Accessories Cleaning and Maintenance
In order to maintain the normal operation of the robot vacuum, it's recommended to clean and maintain the robot vacuum regularly. Please turn off the power of the robot vacuum during cleaning and maintenance. Refer to the table below for the frequency of cleaning and maintenance of accessories:

Accessories	Cleaning Frequency	Cleaning Frequency
Mop	Automatic cleaning after returning to base station	Every 3-6 months
Side brush	Every 2 weeks	Every 3-6 months
Main brush	Every week	Every 3-6 months
High efficiency filter	Every week	Every 3-6 months
Dust Box	Every week	/
Base station dirty water tank	Every week	/
Base station cleaning tan	Every week	/
Universal wheel	Every week	/
Driving wheel	Every week	/
Anti-fall sensor	Every week	/
Lidar	Every week	/

Maintenance Dust Box
Take out the dust box, open the dust box cover, and dump the garbage.

Cleaning Filters
(1)Take the filters out from the dust box.

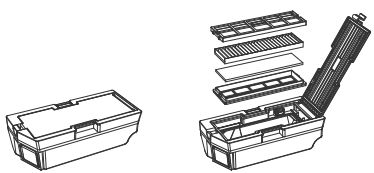

Maintenance

(2)Claen the primary filter, HEPA, sponge by fresh water.

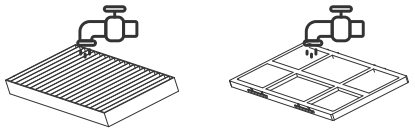

(3)Put the primary filter, HEPA and sponge back together in the dust bin.

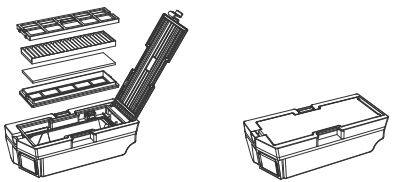

Cleaning Main Brush

Remove the roller brush cover and take out the roller brush. If there is a lot of dust in the suction port, please use a rag to clean the roller brush compartment and the roller brush. If there are hairs entangled in the brush, please use the upper blade of the cleaning tool to cut it off.

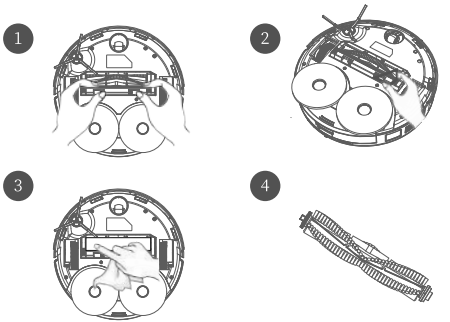

Cleaning Side Brush

After removing the side brush, use use the upper blade of the cleaning tool to clean the side brush and wipe with a cloth.

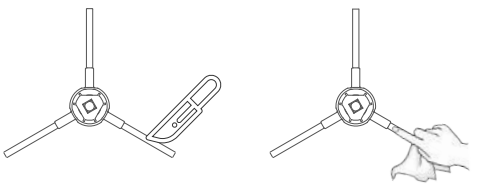

Maintenance

Cleaning Universal Wheel
Clean the universal wheel with a cloth.

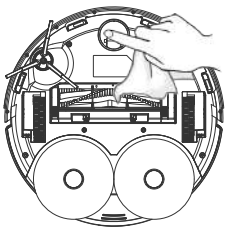

Cleaning Anti-fall sensor
Use a dry cloth to clean cliff sensors to ensure the sensitivity.

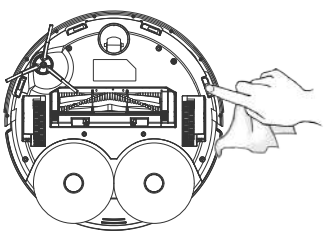

Cleaning Base Station *recommended monthly cleaning
Clean the base station with a cleaning brush

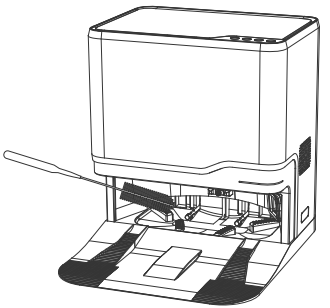

Firmware Upgrade
The robot firmware can be upgraded through the APP. When upgrading, please ensure that the robot is in a charged state and has a certain amount of power. The indicator light flashes when the firmware is upgraded.

Reset
If the system still cannot be used normally after resetting the system, please poke the reset hole under the flip cover in the power-on state to turn off the robot, then press and hold the button to restart the robot.

Product parameters

Packing List

Name	Quantity
Robot	1
Base station	1
Adapter	1
Dust bag	1
Mop	2
Side brush	1
Filter	1

Robot

Name	Parameter
Dimensions	350*350*97.5
Battery	5200mAh
Product weight	3.9Kg
Wireless connection	Wi-Fi Smart Quick Connect
Rated voltage	14.4 V
Rated power	50W

Charging Base Station

Name	Parameter
Dimensions	472*400*445
Rated power	1050W
Rated input	120V
Rated output	24V/1.5A
Rated frequency	50Hz

Troubleshooting

Problem		Reason	Solution
1	Robots cannot be charged	The base station was not powered	Check if the indicator light of the base station is on, if not, please re-plug the plug
		Poor connection of charging contacts	Please use a dry cloth to wipe the charging poles of the base station and the Robot.
2	Unable to power on	The battery level is low.	Put the robot on the charging dock and charge it before use.
		The battery temperature is too low or too high.	Only use the robot within the range of 0℃~40℃
3	Robot is stuck	The Robot is stuck on the loose objects on the ground	Before the Robot starts to work, pick up clothing, scraps of paper, wires and fragile items on the floor to avoid getting stuck while working
		Robot stuck on furniture	The Robot can pass through the bottom of furniture with a height of more than 11cm. If it is than this height, it may be stuck.
4	The Robot cannot return to the base station	The base station not powered	Check whether the indicator light of the base station is on. If not, remove and plug it in again
		The base station is not placed correctly	Remove the obstacles within 1.6ft/0.5m on the left and right side of the base station and within 4ft/1.2m in front of it. Please place the base station according to the instructions
		The cleaning is not started from the base station	Let the Robot start cleaning from the base station
		The recharge path is blocked, for example, the door of the room where the base station is placed is closed	Keep the recharge path clear.
		The base station was moved artificially	Try to avoid moving the base station, let the Robot complete the self-cleaning
		Wi-Fi does not have a signal	Reconnect to Wi-Fi
		The base station is too far away from the robot or there are too many obstacles around	Please manually move the robot back to the base station.

Troubleshooting

	Problem	Reason	Solution
5	The brush is abnormal	Side brush installation is not in place	Check that the edge brush screw is locked in place
		Brush may be stuck by entanglement	Check the brush for entanglement and clean the side brush
		The dust bin is full	Empty the dust bin and replace with a new dust bag
6	Week Suction or Poor cleaning ability	The main brush is jammed.	Please clean the main brush
		Filter is clogged or damp	Clean and dry the filter or replace with a new one
7	Failed to make a scheduled cleaning	The Robot power is not turned on	Ensure that the power switch of the Robot is turned on and there is sufficient power to complete the operation
		Robot is low on power	Please charge
		The setting is not successful or has been cancelled on the APP	Please make an appointment according to the APP operation guide
8	Left/Right wheel abnormal	Left/right wheels may be stuck	Check left/right wheels for entanglement, and clean left and right wheels
9	Abnormal roller brush	The roller brush may be entangled	Check if the roller brush is tangled and jammed and clean the roller brush
10	Robot suspended in the air	The Robot leaves the ground or gets stuck on the edge of a cliff	Please place the Robot on the ground
11	Laser sensor abnormality	The laser ranging sensor is obscured or stuck by a foreign object	Please remove the obstruction or foreign object, if it cannot be removed, please move the robot to a new place.
12	The external anti-collision bumper is abnormal	The infraed anti-collision bumper may be stuck	Tap the left, middle, and right side of the infrared anti-collision bumper to make it return to its place
13	The dust bin is abnormal	The dust bin may not be installed properly	Pull out the dust bin and reinstall it
14	The base station cannot be controlled	The communication between the robot and the base station is abnormal	Place the robot in front of the station, hold the recharge button for a few seconds until hearing continuous beeps, the robot and station are successfully paired.

Troubleshooting

	Problem	Reason	Solution
15	Unable to connect to WiFi	The Robot is not within the network coverage of the router	Make sure the Robot is within the network coverage of the router
		Robot cannot configure itself	Turn on the Robot and reconfigure the network
		The WiFi signal is poor.	Move the robot to an area with good WiFi reception.
		WiFi is disabled	Reset the WiFi and try again.
		Unable to connect to WiFi abruptly.	There may be an error with your router settings.
		Unknown reason	Contact PRETTYCARE customer service for additional support.
16	Cleaning map lost	Moving Robot to another floor, the map lost	The Robot will automatically redraw the new sweep map
17	Unable to create smart map on APP	Moving the Robot during cleaning causes it to be unable to locate	Try not to move the Robot when it is working
		When the Robot finishes cleaning, it automatically generates a map	When the Robot finishes cleaning, it automatically generates a map
18	Makes a strange sound when it is running	Side brush, rolling brush winding foreign matter; The dust collection box and filter fitting are blocked	Turn off the robot and clean main brush, side brush, main wheels, or universal wheel.
		Robot enters strong power cleaning mode	Switch to standard cleaning mode
19	Red light on station always on	The dust bag is removed or not installed properly	Re-insert the dust bag to ensure it is properly installed
		Clean water tank was taken out / No Water	Checkthe water volume of the water tank, if the water volume is insufficient, please add water
		Dirty water tank was taken out / full of water	Check whether the water in the dirty water tank is full. If it is, pour out the dirty water.
		Clean water tank is full	Automatic pumping water for 10s. If 3 pumps and water still full, prompting error.

Troubleshooting

	Problem	Reason	Solution
19	Pink light on station always on	Dust collection has reahed 30 times	The robot will prompt dust bag full. If the dust bag is full, the dust bag need to be replaced, if the dust bag is not full, re-insert the dust bag
20	The robot has begun to miss certain spots.	The wall sensor or cliff sensors may be dirty.	Wipe them with a soft dry cloth.
21	Abnormal behavior	Unknown Reason	Restart the robot.
			Contact PRETTYCARE customer service for additional support.

FCC Caution:

This device complies with part 15 of the FCC Rules. Operation is subject to the following two conditions:(1) this device may not cause harmful interference, and (2) this device must accept any interference received, including interference that may cause undesired operation.

Any changes or modifications not expressly approved by the party responsible for compliance could void the user's authority to operate the equipment.

NOTE: This equipment has been tested and found to comply with the limits for a Class B digital device, pursuant to Part 15 of the FCC Rules. These limits are designed to provide reasonable protection against harmful interference in a residential installation. This equipment generates, uses and can radiate radio frequency energy and, if not installed and used in accordance with the instructions, may cause harmful interference to radio communications. However, there is no guarantee that interference will not occur in a particular installation.

If this equipment does cause harmful interference to radio or television reception,which can be determined by turning the equipment off and on, the user is encouraged to try to correct the interference by one or more of the following measures:

-- Reorient or relocate the receiving antenna.

-- Increase the separation between the equipment and receiver.

-- Connect the equipment into an outlet on a circuit different
from that to which the receiver is connected.

-- Consult the dealer or an experienced radio/TV technician for help.

To maintain compliance with FCC’s RF Exposure guidelines, This equipment should be installed and operated with minimum distance between 20cm the radiator your body: Use only the supplied antenna.