4折页成品折好尺寸：100(W) x 135(H)mm

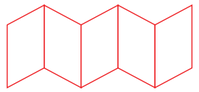

Introduction

Thanks for purchasing intelligent atmosphere bluetooth speakers.In order to let you make good use of this product and enjoy after-sales service,please carefully read this operation manuals before using the product and take good care of the warranty card and qualifier.
Please follow the below safety tips before using the bluetooth speaker.
1.Read and understand all safety tips.
2.Obey the warning and instruction information on the product.
3.Please charge the product once each month to prolong the lithium battery life-span when you do not use the product for long time.
4.Please use adaptor with output of 5V/1A to charge the product to avoid damage to the product.
5.Keep the product away from rain,moisture and liquor.
6. Keep the product away from high temperature hot source.
7.Keep the product avoid dropping,striking and great pressure.

Warm reminder

Please charge the lithium battery 6 hours for first use and 3 hours for usual use.
Suggest use 5V/1A USB adaptor to charge lithium battery.
The lithium battery goes into sleep mode if it has not been used for a long time,please charge the battery long time to activate it.Before activating the battery,the product maybe can not be turned on because of low voltage,or the sound is not stable.

The package includes the follows:

1.Bluetooth speaker:1 pc 2.Type-C charging cable: 1 pc
3.Audio cable: 1 pc 4.Operation mabuals: 1 pc.

Function diagram

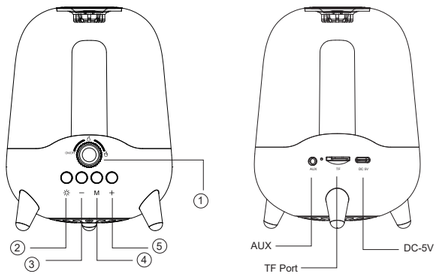

Button funtions:

1	○	Turn cockwise：Turn on / Lighten candlelight Counterclockwise rotation：Turn off / Dim candlelight
2	☼	Short press：Switch light mode between Candlelight / Long press：Close / Turn on light
3	—	Short press：Decrease the volume Long press：Previous song Double-click：Disconnect TWS matching
4	M	Short press：Pause / Play Long press：Switch mode between Bluetooth / FM Radio Double-click：Automatic searching / Disconnect bluetooth
5	+	Short press：Increase the volume Long press：Next song

Night Lights function

1、Night Light mode: clockwise rotation " ○ " button on and light on.
2、candlelight mode: press " ☼ " button to switch the light mode, short press again to exit candlelight mode.
3、Turn off the light: long press " ☼" button for three seconds to turn off the light (sound function to keep working).

Bluetooth mode

1.Turn on bluetooth:turn clockwise to turn on the product and enter into bluetooth mode(with warning tone),it means the bluetooth is scanning.
2.Bluetooth match:press to connect when the phone finds bluetooth of"P-20",the match will succeed after a few seconds(with warning tone of success).
3.After connectiong bluetooth:while playing songs,press"+"and"-"button to increase or decrease volume,long press "+"and "-"button to play next or previous song,press"M"button to play or pause.
4.Disconnect bluetooth: Double-click"M"button.

FM mode

1.Long press"M"button to enter into FM mode.Double-click"M"button to scan and save stations.After scanning,the product plays the first station.Long press"+"and"-"button to switch stations.
2.Turn off radio:press"M"button.
Scanning time and result depends on local stations signal strength.

TF card mode

The speaker reads TF card and play songs after TF card is inserted.Press buttons to control playing of songs.

AUX mode

Use 3.5mm audio cable to connect the product and AUX,There will be warning tone after the connecting succeeds,then the product will play AUX audio

TWS mode

1.After turning on two products,they will match(with warning tone of success),then connect the phone with one of the two P-20 by bluetooth,the two P-20 will work for the phone synchronously to get better stereo.
2.Disconnect TWS: Double-click "-"button to disconnect two P-20.

Charging

Use USB cable(of the product) to charge lithium battery.After charging,the indicator turns red and it means the charging works,the indicator turns off after the charging is completed.

Trouble removal

1.The product powers off ater it is turned on:the battery is low,please charge the product.
2.The product powers off or restart while playing: the battery is low,please charge the product.
3.No sound from speaker:check if turn on the volume.
4.No function or improper function for buttons:turn off the product and restart the product.
5.Fail to match bluetooth:Firstly check if bluetooth is turned on;Secondly check if there is scanning;Finally check if the matching is correct.

Technical specification

Product name : Night Lights Bluetooth Speaker	Frequency response: 200HZ-20KHZ
Model No : P-20	Wireless range: 10 m
Bluetooth version: 5.0	Case material: PC+ABS
Product size: 110 (D)*148mm（H）	Battery capacity: 3.7/1800mAh
Speaker diameter: 52mm	Power source input: 5V/1A
Speaker power: 3 Ohms 5W*1	Playing time:5-6 hours for playing songs
Functions: bluetooth,FM,TF and candlelight	Color:black,pink and green
SNR: ≥80db	

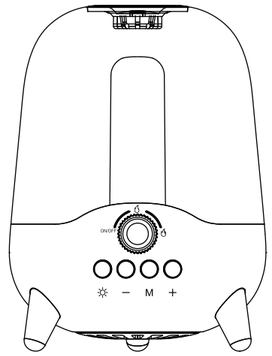

P-20

Night Lights Bluetooth Speaker

前 言

感谢您购买智能氛围灯蓝牙音箱系列产品，为了让您更好地使用本产品并充分享有售后服务支持，请在使用前认真阅读本用户手册，保修卡及合格证，请妥善保管，谢谢！
重要安全信息

在使用蓝牙音箱之前，您需要确保遵守以下基本的安全提示，以保证产品的安全可靠的使用；
1.阅读并了解所有的安全指引。
2.遵守所有标注在产品上的警示和指引信息。
3.产品采用内置大容量锂电池，在不使用时请每隔1个月充电一次对电池进行保养延长产品寿命。
4.请使用能够提供输出电压5V/1A的充电设备，以免造成设备损坏。
5.不可让本产品遭受雨淋、受潮、滴上或溅上任何液体。
6.不可以让产品靠近高温的热源。
7.不可以让本产品跌落或受到撞击，或在上面施加重压。

包装物品清单

包装盒中包括以下物品：
1.蓝牙音箱：1PCS 2.Type-c充电线：1PCS
3.音频线：1PCS 4.说明书：1PCS

按键功能示意图

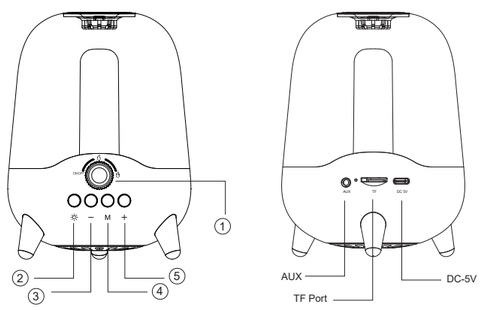

按键功能一览表

序号	按键	操作功能
1	○	顺时针旋转：开机，烛光高亮 逆时针旋转：关机烛光调暗
2	☼	短按：切换烛光模式 长按：关闭、开启烛光
3	—	短按：音量减小 长按：上一曲 双击：断开TWS配对
4	M	短按：播放、暂停 长按：模式切换 双击：搜台（FM模式）、断开蓝牙
5	+	短按：音量加大 长按：下一曲

氛围灯功能

1、氛围灯模式：顺时针转动“○ ”键开机，灯光常亮。
2、烛光灯模式：短按“ ☼ ”键切换到烛光灯模式，再次短按则退出烛光模式；
3、关闭灯光：长按“ ☼ ”键三秒关闭灯光（音响功能保持工作）。

蓝牙模式

1.开启蓝牙：顺时针转动”旋扭“键开机，进入蓝牙模式（伴有提示音），表示音箱进行蓝牙搜索状态。
2.蓝牙配对：手机搜索到“P-20”设备名，点击确认连接，数秒后设备将自动连接成功（伴随连接成功提示音）。
3.连接完成：播放音乐时，短按“+”和“—”键，音量加和音量减，长按“+”和“—”键，切换下一曲和上一曲，短按“M”暂停播放。
4.断开蓝牙：双击”M“键。

FM收音模式

1.长按”M”键切换模式，进入FM收音模式，双击“M”键进全自动搜台及保存电台，收台完毕后，固定在第一个电台，切换电台需要长按“+”和”—“键。
2.关闭收音：短按”M“键。
搜台时间与效果视当地电台信号强弱而定。

TF卡模式

将TF卡插入卡槽位，音箱自动读取卡内音频文件并播放。用户可以使用按键控制音乐的播放。

AUX模式

开机状态下，通过3.5mm音频线将音箱与外部音源设备连接之后，将出现提示音，表示连接成功，本设备即可正常播放外部音源设备的音频内容。

TWS模式

1、把两台P-20的机器开机，即可实现两台音箱之间的自动配对（伴随配对成功提示音），然后将手机等蓝牙设备按蓝牙模式下的操作步骤连接其中一台机器，此时，两台音箱可同步发出声音，以实现更强、更震撼的立体声。
2、断开TWS：双击“–”键即可断开两台音箱的互连。

充电使用

使用随机附赠的USB充电线为锂电池充电。充电开始后，电源指示灯显示红色，表示充电工作正常。灯灭，表示已充满电。

故障排除

1.开机就自动关机：电池电量不足，请充电后使用；
2.播放自动关机或重启：电池电量不足导致电压过低无法播放，请充电后再使用；
3.喇叭没声音：检查音量是否打开；
4.按键无功能或功能出错：关机后再开机；
5.无法进行蓝牙功能连接：首先确认是否打开蓝牙功能，其次有没有进行蓝牙设备搜索，最后确定是否正常连接启用了该蓝牙设备。

技术参数

产品名称	氛围灯蓝牙音箱
型　号	P-20
蓝牙版本	5.0（中科蓝讯）
产品尺寸	110 (D)*148mm（H）
喇叭直径	52mm
喇叭功率	3欧5W*1
信躁比	≥80db
频响范围	200HZ-20KHZ
无线范围	10米
外观材质	PC+ABS
电池容量	3.7/1800mAh
电源输入	5V/1A
播放时间	听歌时间5-6小时
功能	蓝牙、FM、TF、烛光灯
颜色	黑色，粉色，绿色

温馨提示:
.首次使用时请为锂电池充电6个小时，平时充电3小时。
.推荐使用规格为5V//1A的USB充电器为锂电池充电。
.锂电池长期不使用将会进入休眠状态，需要更长的充电时间才能激活锂电池。
在彻底激活锂电池之前，机器出现因电压过低无法正常开机，或声音表现不稳定的情况均属于正常情况。

This device complies with part 15 of the FCC Rules. Operation is subject to the following two conditions: (1) this device may not cause harmful interference, and (2) this device must accept any interference received, including interference that may cause undesired operation.
Any changes or modifications not expressly approved by the party responsible for compliance could void the user's authority to operate the equipment.
NOTE: This equipment has been tested and found to comply with the limits for a Class B digital device, pursuant to Part 15 of the FCC Rules. These limits are designed to provide reasonable protection against harmful interference in a residential installation. This equipment generates, uses and can radiate radio frequency energy and, if not installed and used in accordance with the instructions, may cause harmful interference to radio communications. However, there is no guarantee that interference will not occur in a particular installation.
If this equipment does cause harmful interference to radio or television reception,
which can be determined by turning the equipment off and on, the user is encouraged to try to correct the interference by one or more of the following measures:
-- Reorient or relocate the receiving antenna.
-- Increase the separation between the equipment and receiver.
-- Connect the equipment into an outlet on a circuit different
from that to which the receiver is connected.
-- Consult the dealer or an experienced radio/TV technician for help.
The device has been evaluated to meet general RF exposure requirement. The device can be u sed in portable exposure condition without restriction