VIVAX METROTECH

Used with the vCam Mobile Controller App

vCam Wi-Fi Adapter

User Manual

Vivax-Metrotech Corporation

4.04.000268 01/21/2026 V1.0

VIVAX METROTECH

Scan the QR code to obtain the latest online manual

Check for the latest online manual

Knowledge Center
https://vivax-metrotech.com/support/knowledge-center/

Vivax-Metrotech Corporation

General Safety & Care Information

◆ Health and Safety

This equipment is primarily used by professionals in the sewer and plumbing industry to inspect sewer pipes. It is maintained by professionals familiar with the health risks of maintaining equipment in a sewer.

Such professionals will be protected by their company's recommendations and work practices. If, for any reason, they are not or are not familiar with such practices, please check our website or email SalesUSA@vxmt.com for a copy of the Health and Safety Document used by Vivax-Metrotech for employees involved in the demonstration, maintenance, and handling of sewer camera systems.

- Keep all electrical connections dry and off the ground.
- Be aware of your surroundings at all times. Cover off open utility holes and follow traffic control regulations.
- Use personal protection such as eyewear, rubber gloves, and non-skid safety shoes.

◆ Worksite Safety

- Use your company's or other applicable safety codes and rules when using this equipment.
- **Do not** use this equipment in explosive areas – such as in the presence of flammable liquids, gases, and heavy dust.

◆ Equipment Safety

- **Do not** open the enclosures (housings) of the reel or camera heads.
- Opening the housing or camera head will void any warranty.
- Use only the leads supplied with the control module for AC or DC operation and charging.

◆ Batteries and the Environment

This Vivax-Metrotech product uses a rechargeable Lithium-Ion battery and a Lithium metal watch battery.

◆ Heat from camera head LEDs

The camera head may become hot when left on and unused. Handle the camera head with care when it is sitting outside of the pipe for extended periods. We recommend using the camera skid and turning down the LEDs. The camera's LEDs will automatically turn off after 5 minutes without activity. No activity is triggered if the pushrod drum does not spin after 5 minutes.

◆ High-Pressure Water or Pressure Washers

Do not use pressure washers to clean the reel or other camera system parts.

◆ Intended Use

This product is designed to inspect sewer laterals and basic indoor and outdoor plumbing. This product is not designed for and should not be used to inspect oil or other petrochemical pipes.

◆ FCC & IC Stateme

Please note that changes or modifications not expressly approved by the party responsible for compliance could void the user's authority to operate the equipment.
This device complies with Part 15 of the FCC Rules. Operation is subject to the following two conditions:
(1) This device may not cause harmful interference, and
(2) This device must accept any interference received, including interference that may cause undesired operation.

This device complies with Industry Canada license-exempt RSS standard(s). Operation is subject to the following two conditions:
(1) This device may not cause interference, and
(2) This device must accept any interference, including interference that may cause undesired operation.

Le présent appareil est conforme aux CNR d'Industrie Canada applicables aux appareils radioexempts de licence. L'exploitation est autorisée aux deux conditions suivantes:
(1) l'appareil ne doit pas produire de brouillage, et
(2) l'utilisateur de l'appareil doit accepter tout brouillage radioélectrique subi, même si le brouillage est susceptible d'en compromettre le fonctionnement.

Under Industry Canada regulations, this radio transmitter may only operate using an antenna of a type and maximum (or lesser) gain approved for the transmitter by Industry Canada. To reduce potential radio interference to other users, the antenna type and its gain should be chosen so that the equivalent isotropically radiated power (e.i.r.p.) is not more than necessary for successful communication.

Conformément à la réglementation d'Industrie Canada, le présent émetteur radio peut fonctionner avec une antenne d'un type et d'un gain maximal (ou inférieur) approuvé pour l'émetteur par Industrie Canada. Dans le but de réduire les risques de brouillage radioélectrique à l'intention des autres utilisateurs, il faut choisir le type d'antenne et son gain de sorte que la puissance isotrope rayonnée équivalente (p.i.r.e.) ne dépasse pas l'intensité nécessaire à l'établissement d'une communication satisfaisante.

This equipment complies with FCC radiation exposure limits set forth for an uncontrolled environment. This equipment should be installed and operated with minimum distance 20cm between the radiator & your body.

This equipment complies with IC RSS-102 radiation exposure limits set forth for an uncontrolled environment. This equipment should be installed and operated with minimum distance 20cm between the radiator & your body.

ce matériel est conforme aux limites de dose d'exposition aux rayonnements, CNR-102 énoncée dans un autre environnement.cette eqipment devrait être installé et exploité avec distance minimale de 20 entre le radiateur et votre corps.

Regulatory Labels

This section shows the required FCC and IC information.
To access this information do the following:

1. At the Main screen select the Setting icon.
2. Tap on the Regulatory Labels to find the FCC and IC information.

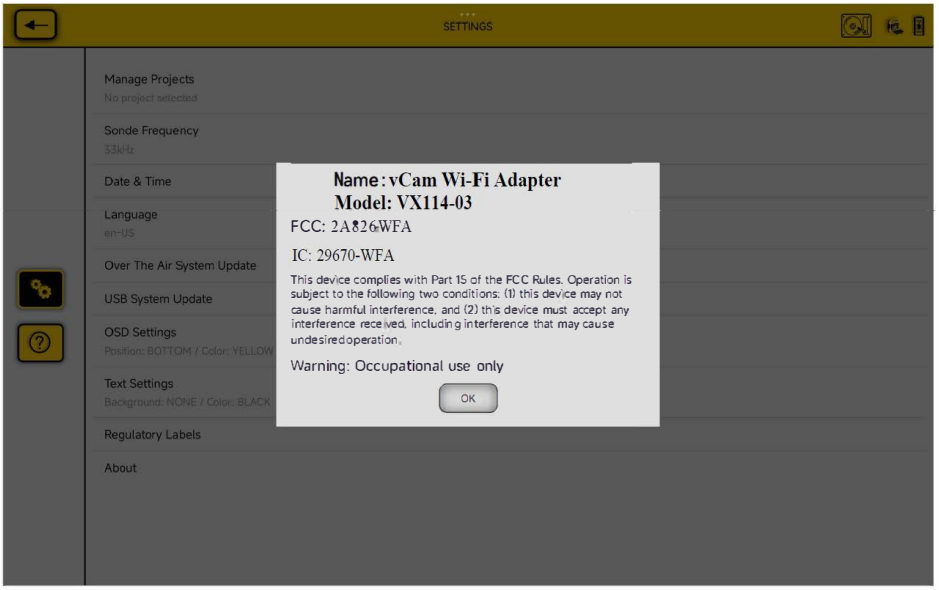

Table of Contents

1. Service & Support....1
   1.1 Model and Serial Number Location....1
   1.2 Worldwide Sales Offices and Service Centers....2
2. Introduction....3
   2.1 The vCam Wi-Fi Adapter....3
   2.2 What's in the Box....3
3. vCam Wi-Fi Adapter (WFA) Setup....4
   3.1 Mount the vCam Wi-Fi Adapter to the Reel....4
   3.2 Install the cable plug holder....5
4. Using the Wi-Fi Adapter....7
   4.1 The vCam Wi-Fi Adapter....7
   4.2 Charge the Internal Battery....7
   4.3 Download and install the vCam Mobile Controller App....8
   4.4 Connect to the VMC App....8
   4.5 Select the Reel Type....9
5. Care and Maintenance....10
   5.1 Control Module / Wi-Fi Adapter....10
6. Troubleshooting....11

1. Service & Support

1.1 Model and Serial Number Location

When requesting product support provide the units model and serial number.

1 Serial number location

1.2 Worldwide Sales Offices and Service Centers

Worldwide Sales Offices and Service Centers

World Headquarters, United States of America

Vivax-Metrotech Corporation
3251 Olcott Street, Santa Clara,
CA 95054, USA
T/Free: 1-800-446-3392
Tel: +1-408-734-3880
Fax: +1-408-904-4964
Website: www.vivax-metrotech.com
Email: SalesUSA@vxmt.com

Canada

Vivax Canada Inc.
41 Courtland Ave Unit 8,
Vaughan, ON L4K 3T3, Canada
Tel: +1-289-846-3010
Fax: +1-905-752-0214
Website: www.vivax-metrotech.ca
Email: SalesCA@vxmt.com

Germany

Metrotech Vertriebs GmbH
Am steinernen Kreuz 10a,
96110 Schesslitz, Germany
Tel: +49 9542 77227-43
Website: www.vivax-metrotech.de
Email: SalesEU@vxmt.com

China

Vivax-Metrotech (Shanghai) Ltd.
Building 10, Lane 1158 Zhongxin Rd.,
Songjiang District, Shanghai, China, 201615
Tel: +86-21-5109-9980
Website: www.vivax-metrotech.com
Email: SalesCN@vxmt.com.cn

Central/South America and the Caribbean

Ventas para América Latina
3251 Olcott Street,
Santa Clara, CA 95054, USA
T/Free: 1-800-446-3392
Tel: +1-408-734-3880
Fax: +1-408-743-5597
Website: www.vivax-metrotech.com
Email: LatinSales@vxmt.com

France

Vivax-Metrotech SAS
Technoparc - 1 allée du Moulin Berger,
69130 Ecully, France
Tel: +33(0)4 72 53 03 03
Fax: +33(0)4 72 53 03 13
Website: www.vivax-metrotech.fr
Email: SalesFR@vxmt.com

United Kingdom

Vivax-Metrotech Ltd.
Unit 1, B/C Polden Business Centre,
Bristol Road, Bridgwater, Somerset,
TA6 4WA, UK
Tel: +44(0)1793 822679
Website: www.vivax-metrotech.co.uk
Email: SalesUK@vxmt.com

2. Introduction

2.1 The vCam Wi-Fi Adapter

The vCam Wi-Fi Adapter connects to a tablet or smartphone via Wi-Fi and streams the video from the reel into the vCam Mobile Controller app. The video stream can be viewed and recorded into the app and copied onto a USB thumb drive. Audio and text commentary can be added to videos, and text commentary can be added to captured pictures. The current time, date, and pushrod deployment distance are timestamped and added to both the video and pictures. The captured video and pictures can be reviewed in the VMC app and exported or shared.

Please read this section!

Vivax-Metrotech provides technical support for the vCam Mobile Controller (VMC) app, our vCam series camera systems and our locators.

Vivax-Metrotech cannot supply technical support or training for smartphones, tablets or file-sharing apps on your phones and tablets.

Please refer to the help screens and documentation included with your file-sharing apps, as well as the operating system on your phone or tablet (Android and iOS).

2.2 What's in the Box

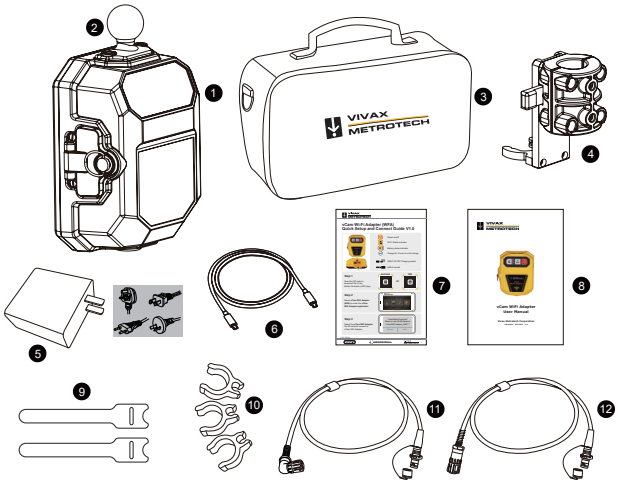

1. vCam Wi-Fi Adapter
2. Ball Mount
3. Accessory Bag
4. Reel Mounting Bracket
5. Multi-plug AC Charger
6. USB-C Power Cable
7. Quick Guide
8. Manual
9. Velcro tie
10. Interconnect Cable Clips
11. Type-CP Reel Interconnect Cable
12. Type-MX Mini Reel Interconnect Cable

3. vCam Wi-Fi Adapter (WFA) Setup

3.1 Mount the vCam Wi-Fi Adapter to the Reel

Select a mounting spot that:

- Is out of the way and will not interfere with the operation of the reel.
- It is easy to attach and detach the WFA from the reel.
- Will not damage the WFA during transport and storage.
- Gives access to the power button and USB compartment.
- Gives a visual to the WFA controls.

Suggested Placement

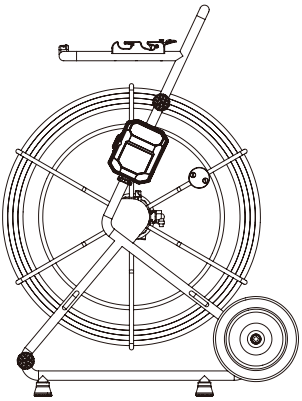

Type-CP Reel

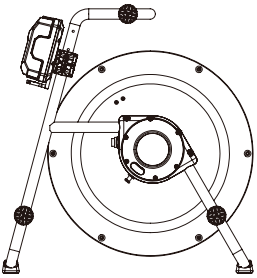

Type-MX Reel

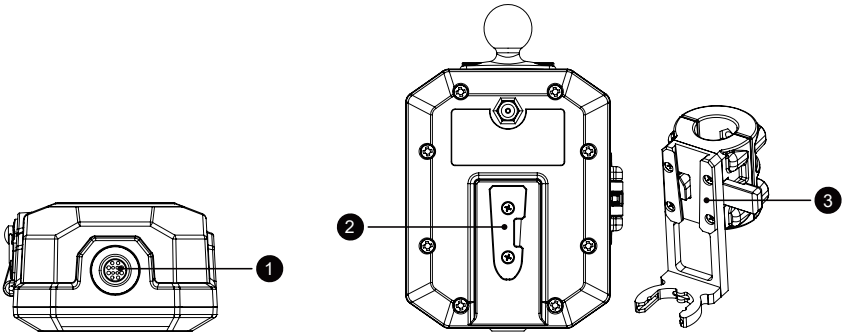

❶ Interconnect cable socket ❷ Mounting plate ❸ Mounting plate receptacle

1. Remove the four screws to separate the halves of the bracket.	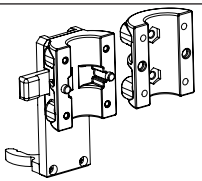
2. Install the two halves around the reel's frame and screw in at least two screws.	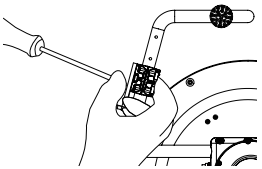
3. Attach the WFA and move it to its desired location.	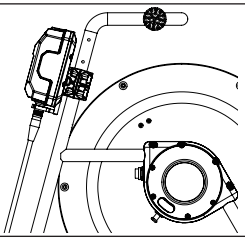
4. If the location is good, remove the WFA and tighten all four screws to hold the mounting bracket in place.	
5. Install the WFA in the mount and plug in both ends of the interconnect cable.	
6. Use the supplied cable clips to organize the interconnect cable.	
NOTE: If desired screw in the two setscrews to create a dimple in the reel frame for permanent placement.	

3.2 Install the cable plug holder

When the WFA is not connected to the reel, place the protective cap over the plug.

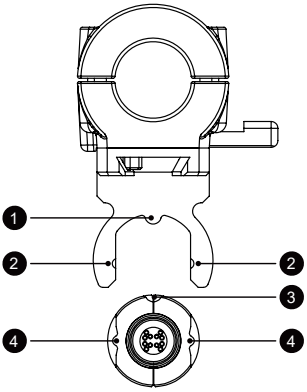

1. Rear orientation tab
2. Side orientation tab receptacle
3. Rear orientation tab receptacle
4. Side orientation tab

1. Line up the plug collar to the bracket making sure the red dot on the plug is facing forward (toward you).	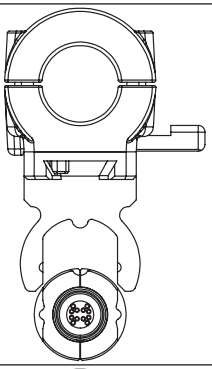
2. Push the plug into the bracket so that it locks in place.	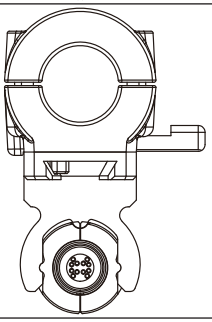
3. Use the supplied cable clips and Velcro ties secure the interconnect cable in place.	

Install the steel cap over the plug when the Wi-Fi Adapter is not mounted.
Install the cap by lining the red dot on the cap with the dot on the plug then pressing it in place. To remove the cap you may need to gently push up on the base of the plug to release its locking fins.

4. Using the Wi-Fi Adapter

4.1 The vCam Wi-Fi Adapter

Control Panel Buttons

	On/Off Button - Press and release to turn the unit on. This button will glow while the unit is turned on. Press and hold to turn the unit off.
	Wi-Fi - The Wi-Fi button shows the vCam Wi-Fi Adapter's connection status. When the LED is solid the Adapter is ready to connect.
	Battery Status - Press and release this button to see the reel's internal battery status. The indicator is shown in four segments representing 25% of the reel's battery life.

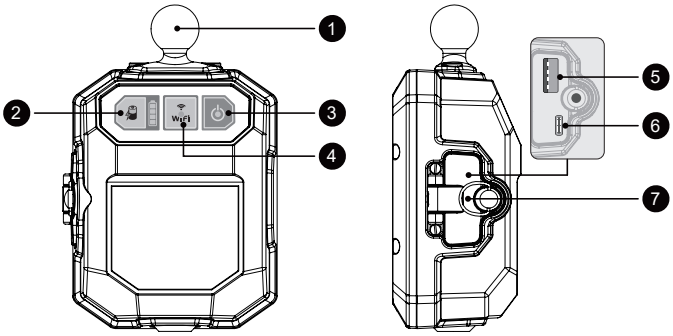

1. Mounting ball
2. Battery status indicator
3. On Off button
4. Wi-Fi status indicator
5. USB-A Data Port
6. USB-C Charging Port
7. Charging/USB Compartment

4.2 Charge the Internal Battery

Plug the supplied battery charger into the USB-C charging socket. The charging indicators' red LED segments will show the percentage change as a solid and the charging status as a flashing LED. When fully charged all the LED segments will be solid. It typically takes about three hours to fully charge a discharged battery, which provides about six hours of intermittent use.

4.3 Download and install the vCam Mobile Controller App

Follow the QR codes below to download and install the app. Use the links below or search for “vCam Mobile Controller”.

Android **iOS**

Platform	Apple	Android
Minimum operating system	14.0 or greater	10 or greater

Detailed instructions on the operation of the vCam Mobile Controller apps are found inside the app by pressing on the Help ? icon.

4.4 Connect to the VMC App

	Press and release to turn the unit on. When on this button glows green.
	Wait approximately 20 seconds for the Wi-Fi indicator button to glow.
	Launch the vCam Mobile Controller App.
	Tap on the product icon at the Start Screen.

In iOS tap on Join. In Android tap the unit's **Serial Number**.

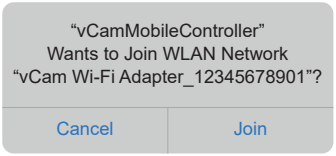

iOS

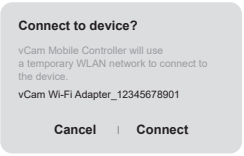

Android

You are now connected to the vCam Mobile Controller App.

For optimal app performance give the app the following permissions.

Access and permissions:	
Location	Allow for Wi-Fi scanning.
Microphone	Allow adding audio to recording videos.
Gallery	Allow for the exporting of pictures and videos.
Storage	Allow modification or deletion of files.

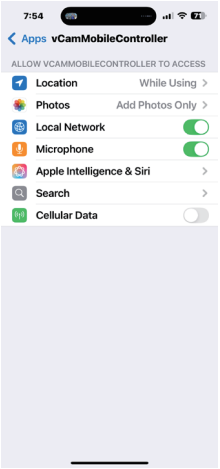

iOS

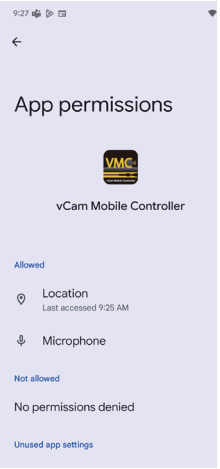

Android

4.5 Select the Reel Type

In the vCam Mobile Controller app

1. Tap on **Settings** ⚙.
2. Tap on **REEL SETTINGS**.
3. Tap on the Reel Type and its length.
   This setting will be stored in the app to help provide an accurate distance count of the reel.
   This setting will be saved in the app and only needs to be updated if the reel length is changed or the app is reset to factory defaults.
4. Tap on **Settings** ⚙ to return to the main viewing screen.

5. Care and Maintenance

The vCam camera systems are designed to inspect and not to move debris, waste, or objects.
The vCam camera systems are not designed for use in areas where flammable liquids are present.

Drains and sewers can carry bacteria and other infectious micro-organisms or materials which can cause death or severe illness. Avoid exposing eyes, nose, mouth, ears, hands, cuts and abrasions to wastewater. To further help protect against exposure to infectious materials, wash hands, arms and other body areas, as needed, with hot, soapy water and always wear rubber gloves when performing inspections and during clean-up.

When performing maintenance ensure that proper workwear is used. Use protective waterproof gloves, goggles or a face shield to prevent water from splashing in the eyes, face and mouth.

Cleaning supplies:
- Disinfectant wipes for the pushrod, camera head, skids, reel frame, and WFA housing.
- Disinfecting spray for the spring assembly, pushrod, and frame parts.
- Rags for the reel frame, pushrod, spring and camera.
- Low-pressure garden hose for pushrod and spring assembly.

Use the protective cap on the mounting assembly. Do not use a power washer.

- Lens wipes for the camera head lens.
- Microfiber cloth to clean the housing screen.

Bleach - **Do not** use bleach on the pushrod, spring assembly or camera head. Doing so may degrade the pushrod jacket and cable inside the spring assembly.

Steam cleaning: We do not recommend it.

5.1 Control Module / Wi-Fi Adapter

Do not store vCam inspection products outdoors or allow them to sit for extended periods in direct sunlight or hot environments.

Do not store vCam inspection products in vehicles below freezing temperatures overnight.

Use a wet microfiber cloth to remove splashed particles from the housing.

The Lithium-ion battery life can be extended by performing shallow discharges and recharges rather than fully discharging the battery pack before recharging. For maximum battery life recharge the battery when it reaches 50% charge and charge between 80% and 90% of the maximum capacity.

Do not leave the charger plugged into the battery once fully charged as this will also degrade the battery life.

6. Troubleshooting

Please check the Knowledge Center on the Vivax-Metrotech website for the latest support information. Go to www.vivax-metrotech.com and then click **Support**, **Knowledge Center**.

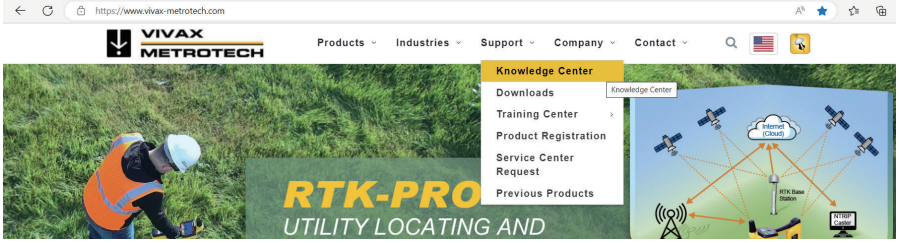

Problem: The battery will not charge

Check:

1. Plug the AC charger in and connect the USB-C cable from the charger to the unit. The charging indicator should immediately start flashing.
2. Make sure the factory-provided charger is being used. The vCam Wi-Fi Adapter requires a 65W USB-C Charger to charge the unit.

Problem: The unit will not turn on.

Check:

1. Ensure that the Wi-Fi Adapter is charged. Plug in the AC charger and connect the USB-C cable from the charger to the unit. The charging indicator should immediately start flashing.
2. If the battery indicator does not flash when the unit is connected to AC power a problem may exist with the unit. Contact the factory or authorized repair center.

Problem: Cannot connect to the vCam Mobile Controller App.

Check:

1. Ensure that the unit is turned on and the Wi-Fi Indicator light is green before attempting to connect.
2. Do not open the app until the unit is powered on and the Wi-Fi Indicator is green.
3. Close the app. On the phone go to list of available networks. Look for the vCamWiFiAdapter in the list of networks. Tap on it to connect. Now launch the app, select the vCam Mobile Controller and give it up to one minute to connect.
   Please refer to the detailed vCam Mobile Controller manual app found in the VMC app by tapping on the ? icon.

Illustrations used in preparing this manual will inevitably resemble those of other manufacturers. These manufacturers have permitted the use of their graphics, and this statement is intended to attribute such credit.

The Bluetooth® word mark and logos are registered trademarks owned by Bluetooth SIG, Inc.
iOS is a registered trademark of Cisco Systems, Inc. in the U.S.
Android, Google and Google Maps are registered trademarks of Google LLC.
DROPBOX is a registered trademark of DROPBOX, Inc.
BOX Software is a registered trademark of BOX, Inc.
OneDrive and OneNote are registered trademarks of Microsoft.
Wi-Fi is a trademark of the Wi-Fi Alliance.

Disclaimer: Product and accessory specifications and availability information are subject to change without prior notice.

Vivax-Metrotech Corporation
3251 Olcott Street, Santa Clara, CA 95054, USA
Toll-Free: 1-800-446-3392
Phone: +1-408-734-3880
Website: www.vivax-metrotech.com

© 2026 Vivax-Metrotech Corporation