Wi-Fi Smart Thermostat

Quick Start Guide

Important Information

FAILURE TO FOLLOW THESE SAFETY INSTRUCTIONS COULD RESULT IN FIRE, ELECTRIC SHOCK, OR OTHER INJURY OR DAMAGE.

In some regions, a professional installation may be necessary. Check your local regulations and building codes before undertaking any electrical work, as permits and/or professional installation might be legally required.

Before starting installation, turn off the power to the installation area at your circuit breaker or fuse box. Always handle electrical wiring with care to avoid the risk of electrical shock or equipment damage.

Install your device in a location that is away from heat sources and direct sunlight to prevent temperature fluctuations, which could affect the accuracy of temperature readings and overall device performance. Avoid placing your device near water or in areas with high humidity.

In the box

Wi-Fi Thermostat

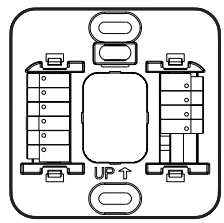

Backplate

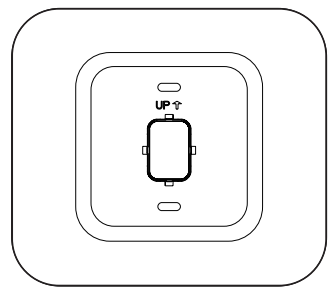

Trim Plate

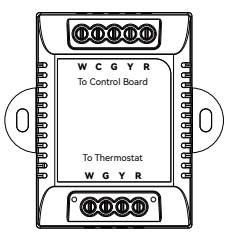

C-wire Power Module (optional)

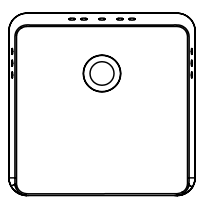

Remote Zone Sensor (optional)

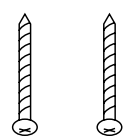

Screws (x2)

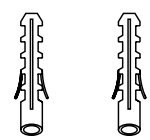

Drywall Plugs (x2)

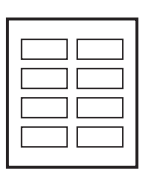

Wire Labels

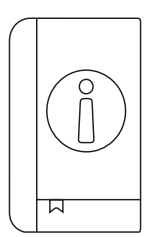

User Guide

Phillips screwdriver

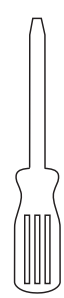

Flat head screwdriver

These tools will help with installation

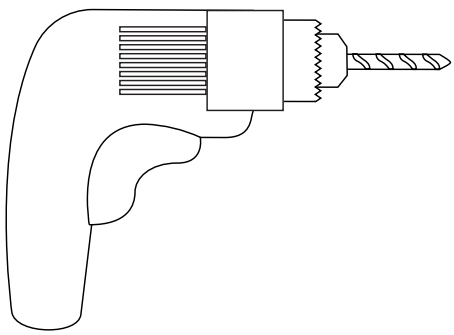

A drill with a 3/16-inch drill bit

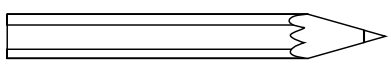

A pencil

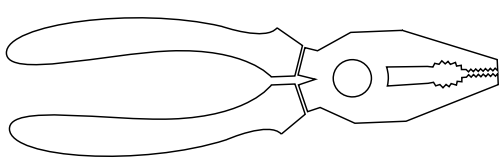

Pliers and wire strippers

Step 1. Turn off the power

Locate the power switch for the HVAC system and turn it off. This step is important for your safety and the safety of your home.

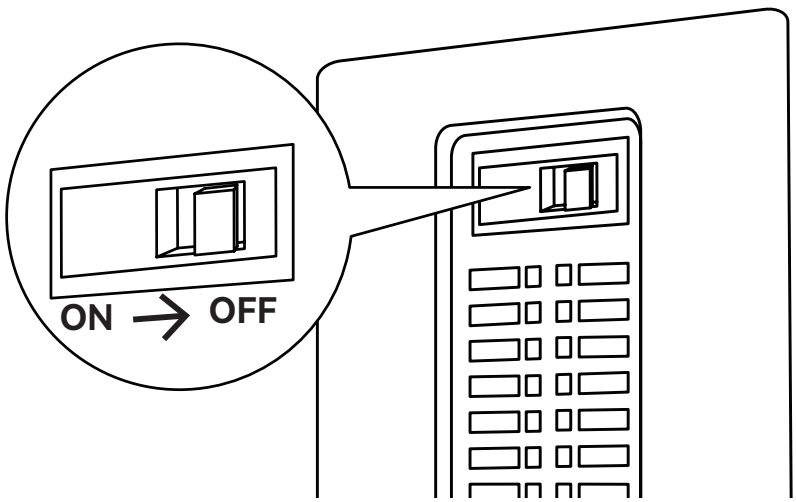

Once the power is off, try adjusting your old thermostat to double check that the system is off.

Step 2. Remove your old thermostat faceplate

Some faceplate can be easily pop off, while others require a screwdriver.

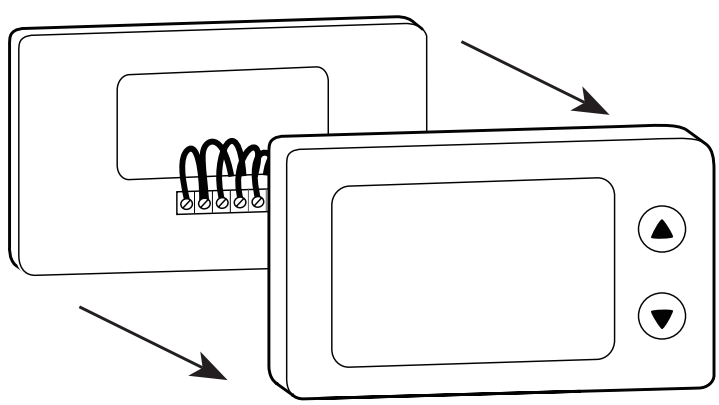

Step 3. Compatibility Check

A. High Voltage

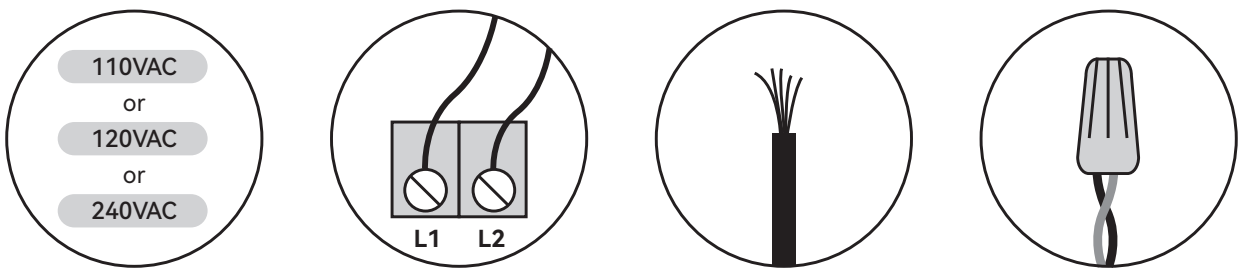

If you see any of these indicators on the back of your old thermostat, it indicates that your system is high voltage, which may not be compatible.

B. C-wire

- The thermostat requires a C wire for power. Check if there is a wire connected to the C terminal on your old thermostat.

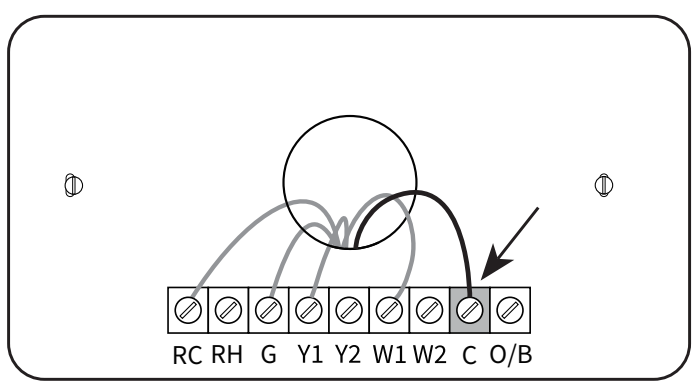

- If you don't have a C wire, you will need the following 3 wires on your old thermostat to install the C-wire power module to power new thermostat: *Y/Y1, G, and R (or Rc or Rh)*

If you have neither a C wire nor the three required wires mentioned above, then your system is incompatible.

Step 4. Take a photo of your old wiring

It's important to have a photo of your old wiring, just in case you need to return the wiring to the way it was before.

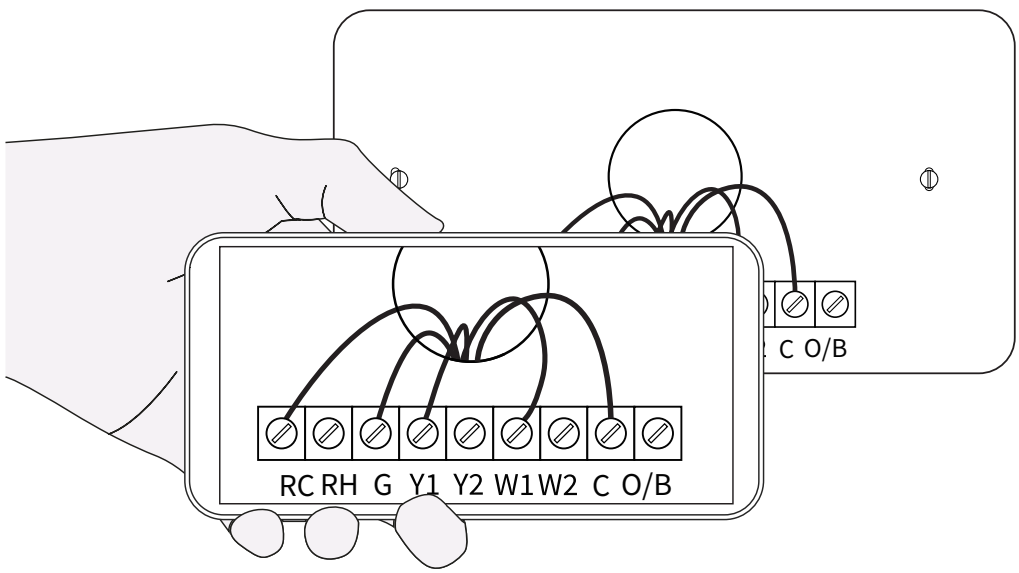

Step 5. Remove all jumper wires

Some systems have short wires connecting two terminals. One of the two terminals may not have a wire coming trom the wall. Remove all jumper wires. Be careful not to remove regular wires coming from the wall.

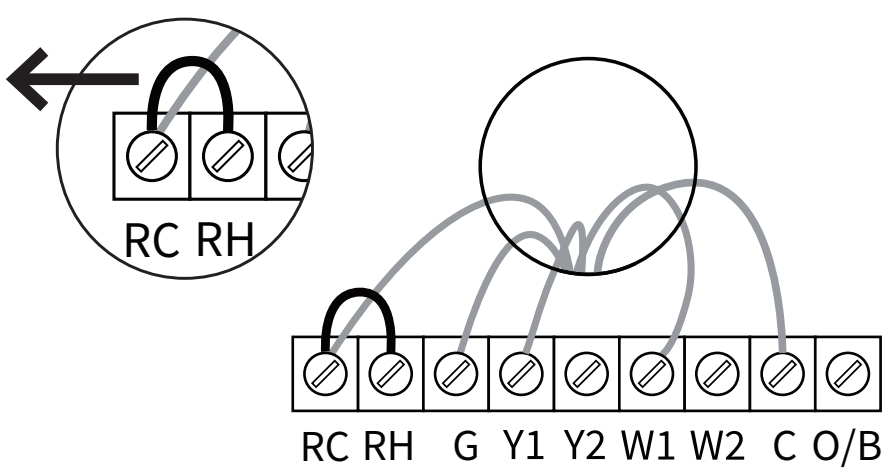

Step 6. Check which set of labels you will be using

Some thermostats have 2 sets of terminal labels, one for heat pump and one for conventional. If you only have one set of labels, please skip this step and jump to page 10.

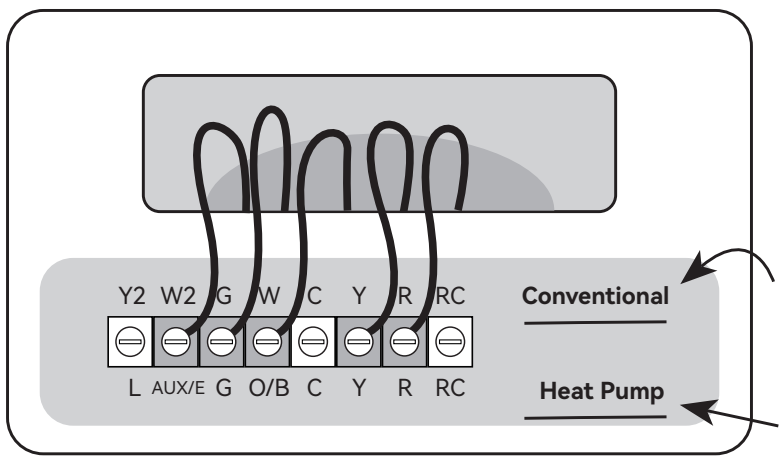

- If your system has a heat pump, please use the heat pump wire labels or the set of wires that includes the "O/B" label.

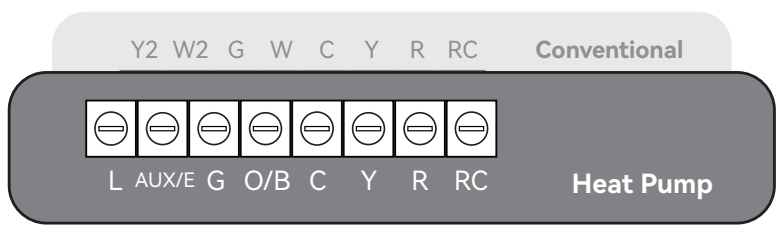

- If your system does not have a heat pump, please use the conventional wire labels or the set of wires without the "O/B" label.

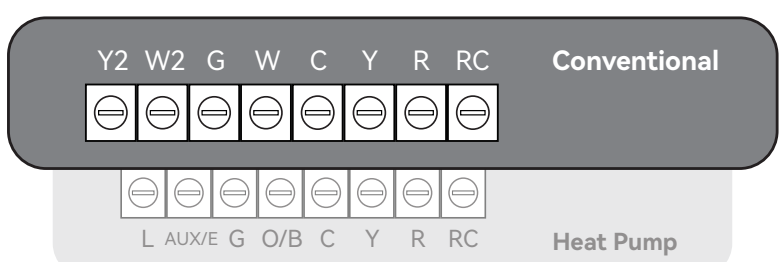

You can also identify it by the colors of wire with W and O/B labels.

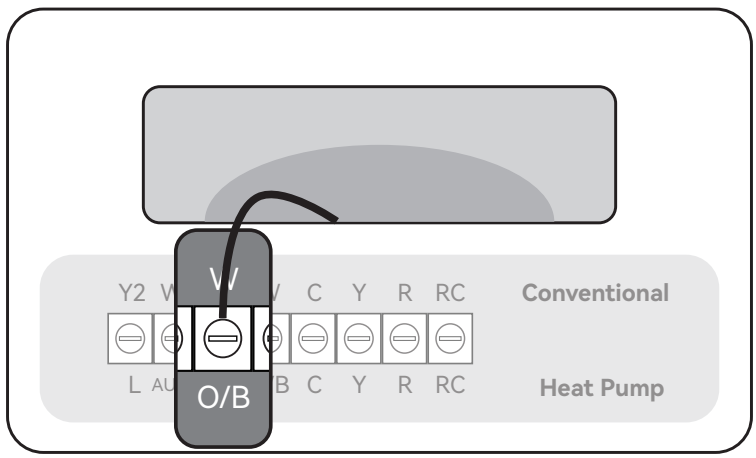

• If it is orange, please use the heat pump wire labels or the set of wires that includes the "O/B" label.

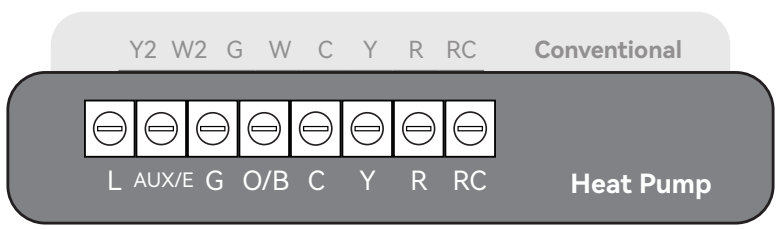

• If it is white, please use the conventional wire labels or the set of wires without the "O/B" label.

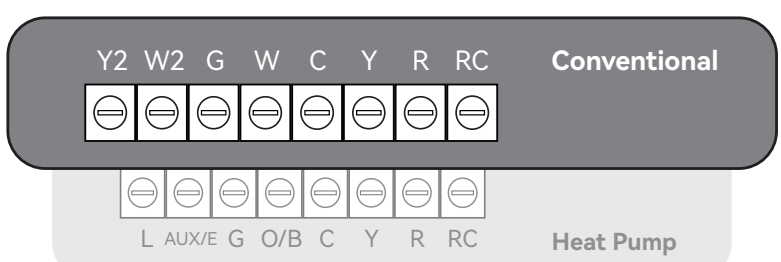

Step 7. Label your wires

Use the provided Wire Labels **(White background)** to tag each wire accordingly. If you have two sets of terminal labels, please select the correct one.

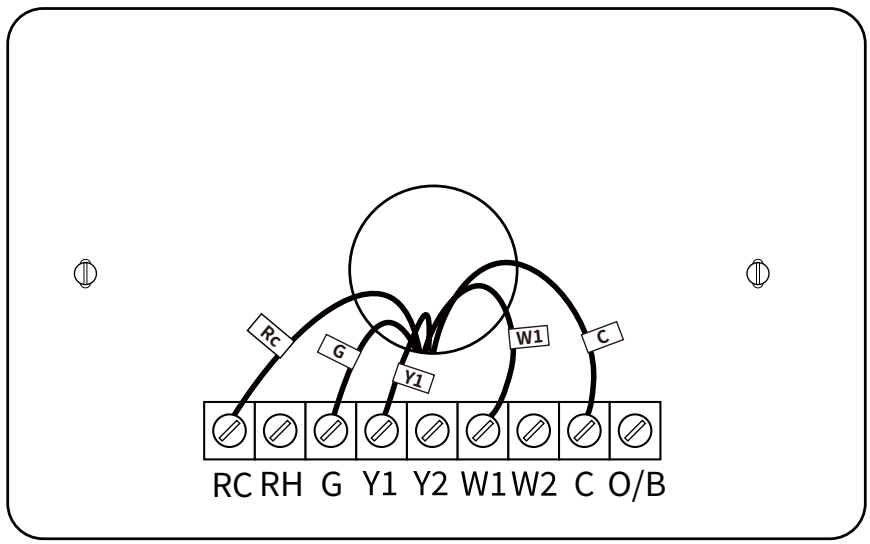

Special labels:

If your old thermostat has wires connected to the following terminals, you need to pay special attention when tagging them:

If you are Heat Pump system

Terminal		Labels
W2/Aux	→	W1
Aux or Aux1	→	W1
Aux2	→	W2

If you are Conventional system

Terminal		Labels
W2/Aux	→	W2

CHECKPOINT: C-WIRE

Do you see any wire connected to the C terminal on your old thermostat?

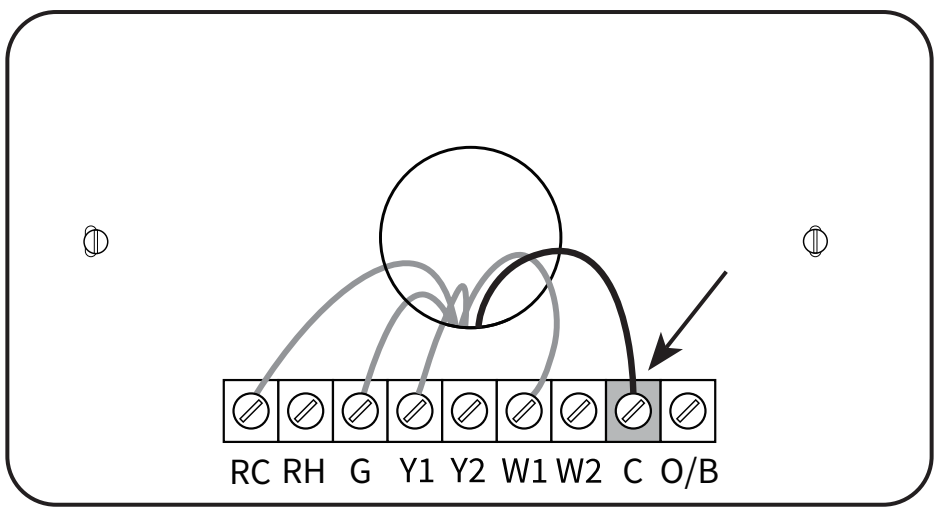

YES

Continue to the **NEXT PAGE**

NO

Go to **PAGE 18**

Install the thermostat ***with a C wire***

Step 8. Disconnect wires

Loosen each terminal and disconnect the wires from your old thermostat. Don't let your wiring fall back into the wall after you disconnect them.

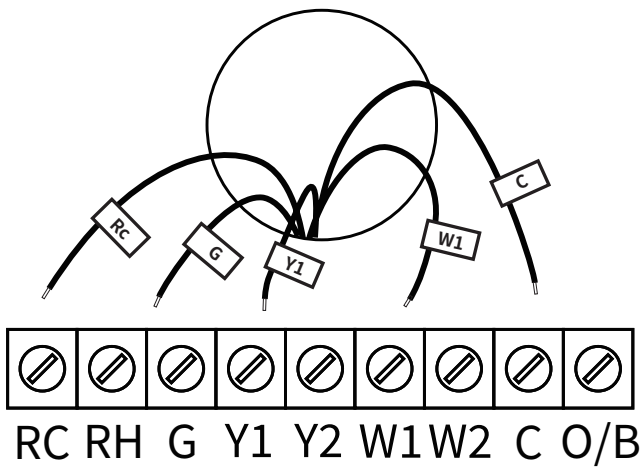

Step 9. Remove your old wall plate

Unscrew the old thermostat from the wall. If your old thermostat has a trim plate, remove it too. You may want to wrap the wires around a pencil so they don't fall back into the wall.

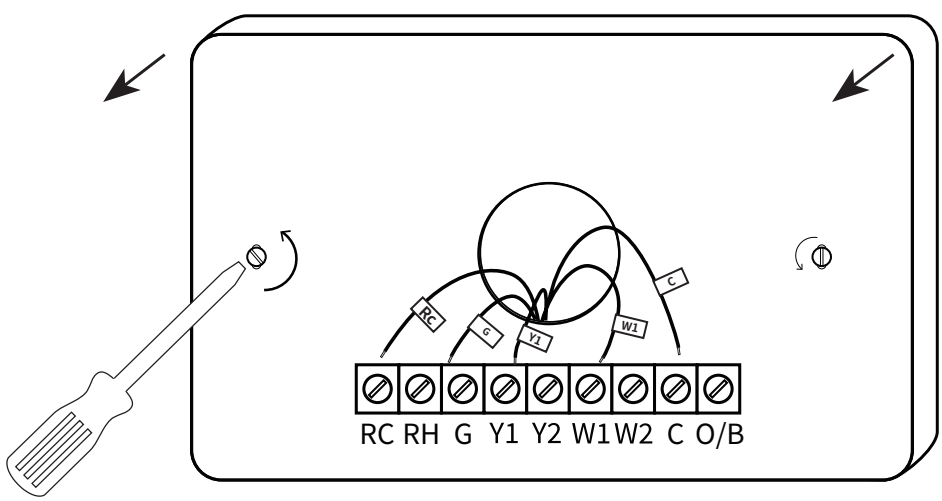

Step 10. Pull the wires through the backplate

Mark where the screws will go. Use the bubble level to make sure the thermostat is straight. If you need to drill new holes in your wall, remove the backplate before doing so.

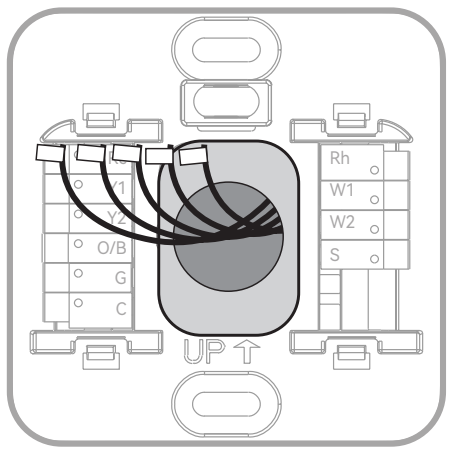

Step 11. Attach the backplate to the wall

Secure your new thermostat's backplate to the wall by using the included anchors and screw. You can drill a hole for the drywall anchors with 3/16' drill bit.

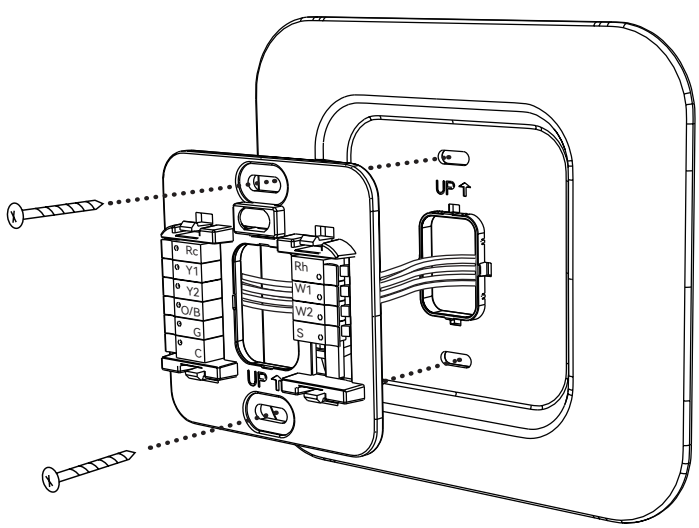

Optional: use the trim plate to cover screw holes or gaps left over from your old thermostat's installation.

Step 12. Connect the wires

Press the terminal block levers down to insert each labelled wire to the matching slot in your backplate. You can refer to the wiring diagram on page 29

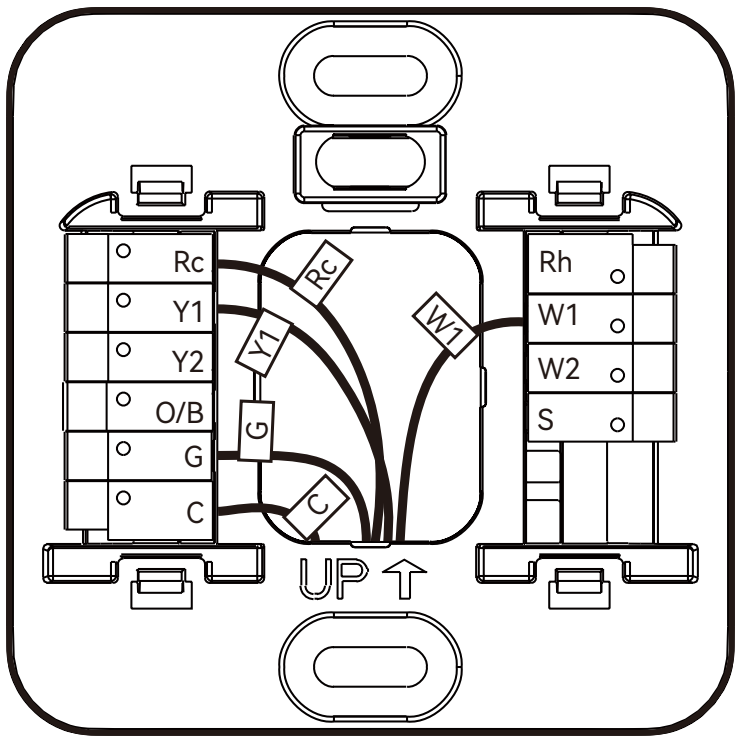

Tug on the wires gently to ensure they are secured. After all the wires are inserted, tuck them neatly back into the wall.

Special wires:

- If you have more than one R wire (That includes R, Rc, and Rh), connect them as follows:

Wires you have	Wire to Rc Terminal	Wire to Rh Terminal
Rc, Rh	Rc	Rh
Rc, R	Rc	R
Rh, R	R	Rh

- If you only have one R wire (That includes R, Rc, and Rh), connect it to **Rc** terminal.

- If you have E wire (Emergency Heat)

E wire → **W2** terminal

Step 13. Take a photo of your new wiring

It's important to have a photo of your new wiring. You will need it later when setting the thermostat.

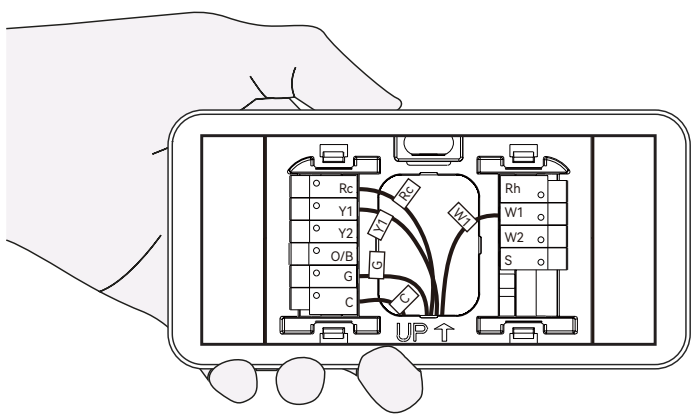

Step 14. Check for air drafts

Air drafts can affect temperature readings. If you feel a draft, seal the hole in the wall.

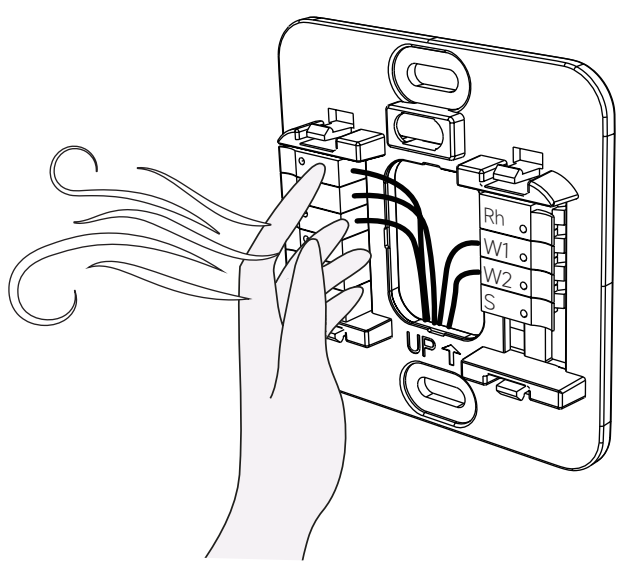

Step 15. Attach the thermostat faceplate

Gently press your Thermostat faceplate onto the backplate until it clicks into place.

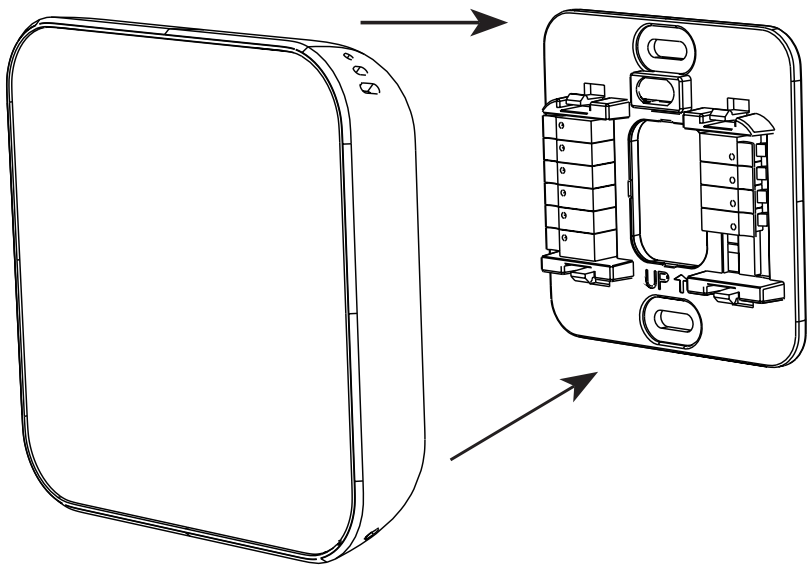

Step 16. Power on your system

Back to your power switch to turn your HVAC system's power back on.

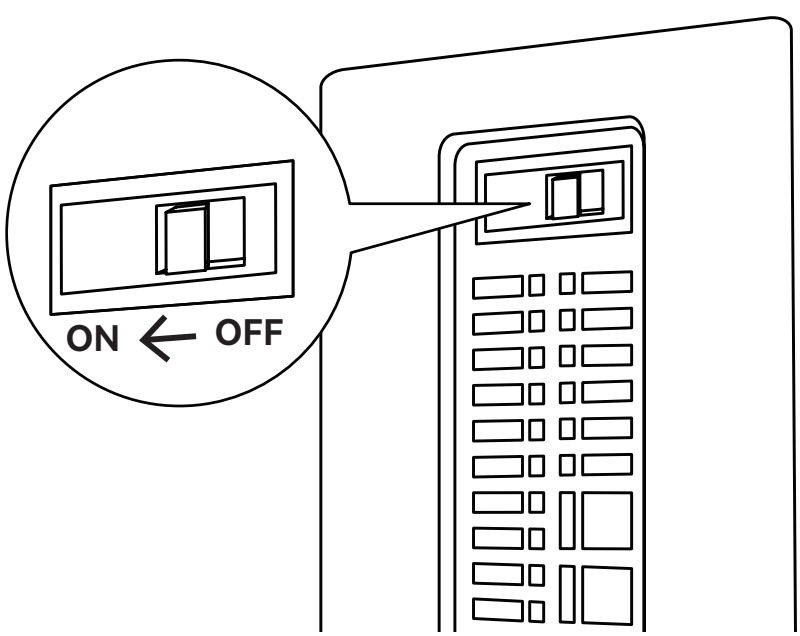

Once powered up, the thermostat's screen will light up and display **'Hi'**. Please go to page 34 to set up the thermostat.

Install the thermostat ***without a C wire (Optional)***

Your wiring requires a C-wire Power Module

If you don't have it, please contact the seller.

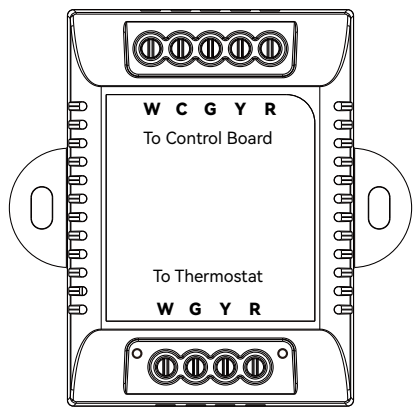

Step 8. Go to your HVAC system

Take your C-wire Power Module, wire labels, screwdriver, your smartphone, and go to your HVAC system. Most of these are located in basements, attics, or garages.

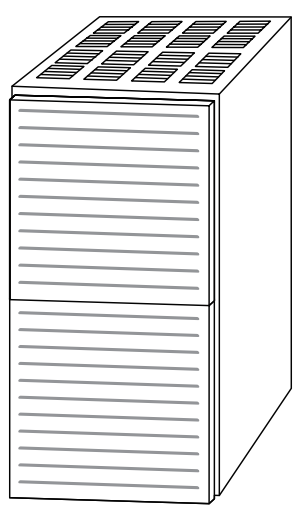

If your system is controlled by more than one thermostat, it may be a zoned system. Remove the cover from your zone panel instead.

Step 9. Remove the cover

Look for screws or tabs to remove the cover to find the control board. It will have wires with the same terminal labels and colors as your thermostat wiring.

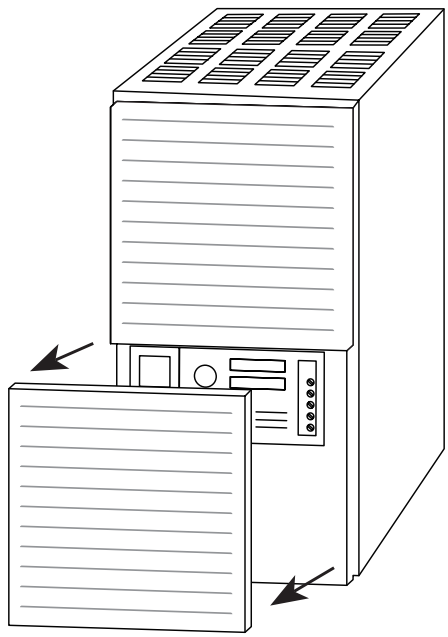

Step 10. Take a photo of your wiring

Take a photo of the wires connected to the terminals of the control board.

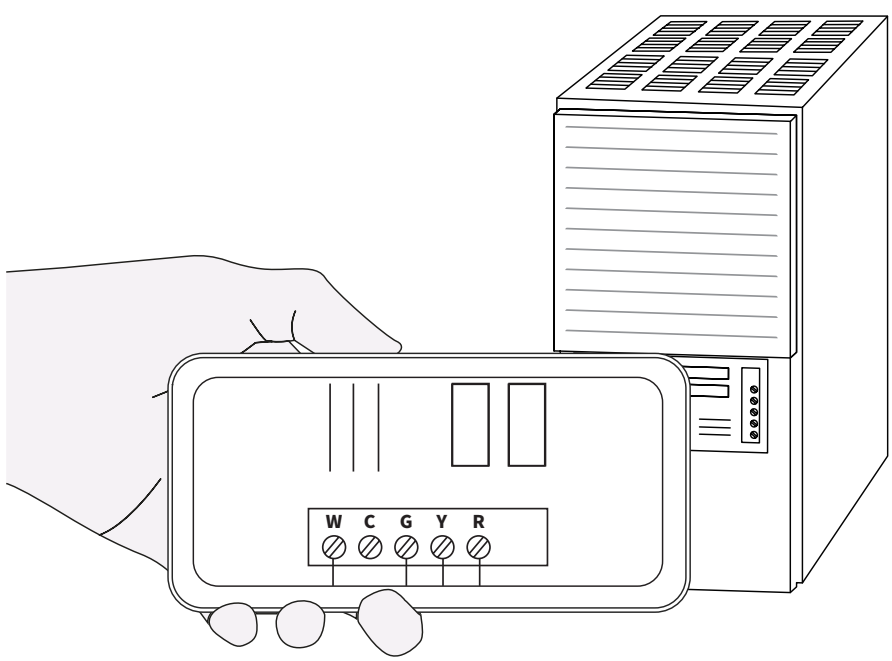

Step 11. Label the wires on control board

Use the included wire labels **(Black background)** to tag 4 wires going to your thermostat: R (or Rc or Rh), Y/Y1, G, W/W1

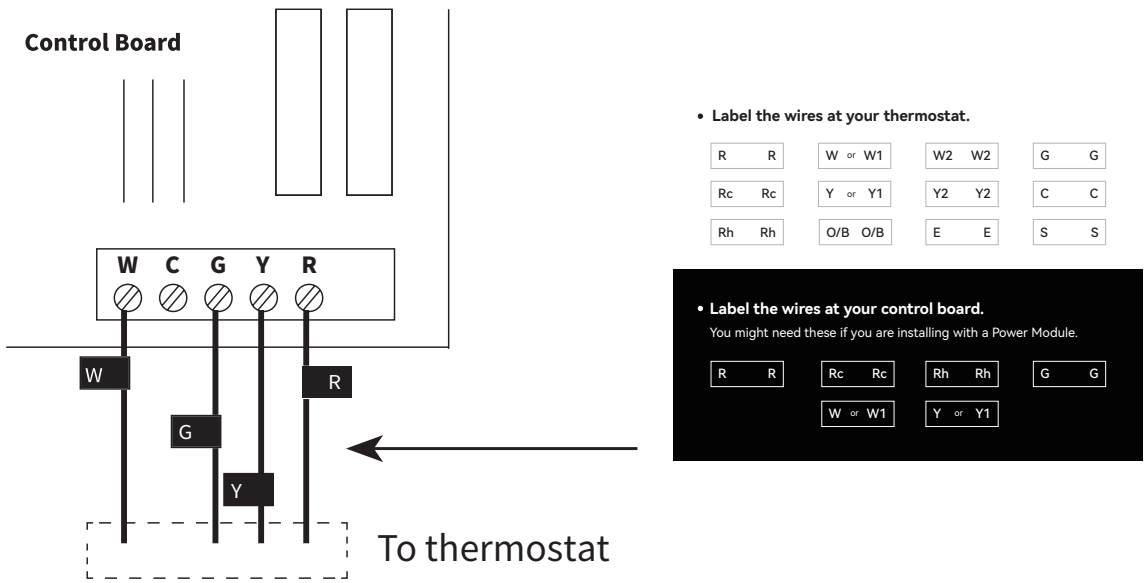

Note: If there are more than one wire connected to one terminal, only label the wire coming from the thermostat.

Step 12. Disconnect the wires

Use the screwdriver to loosen the screws holding the wires you labelled to the control board. Do not disconnect any other wires.

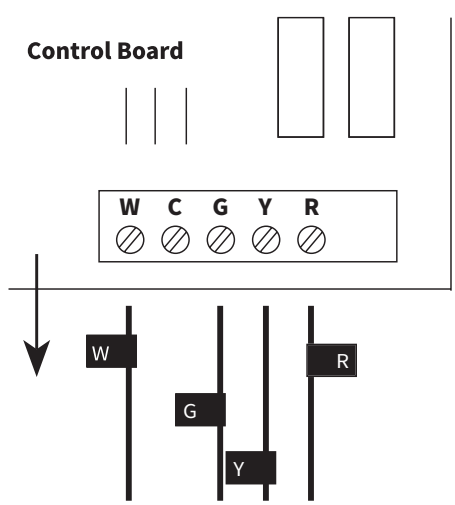

Step 13.

Connect labelled wires to the C-wire Power Module

One at a time, connect the wires with matching labels to each terminal on Power Module. Once all wires are connected, gently tug each one to ensure they're secure.

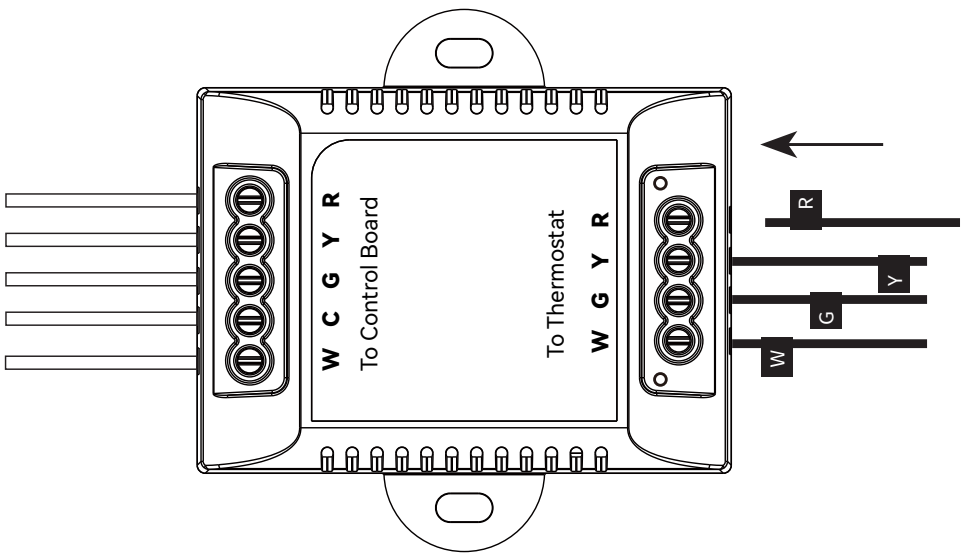

Step 14.

Connect the Power Module to the control board

Connect the 5 white Power Module wires to the corresponding terminal on the control board.

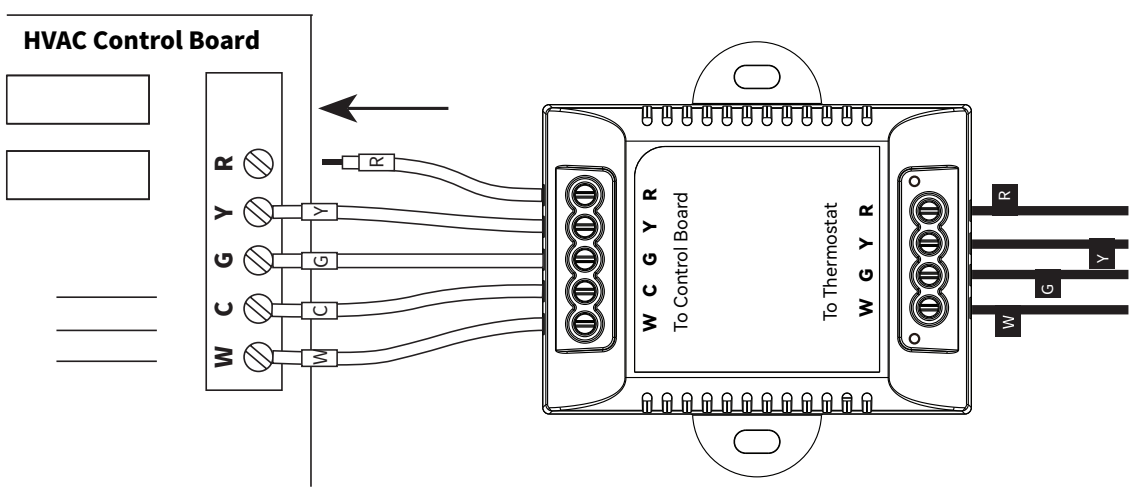

Step 15. Close the cover panel

Make sure you close the cover panel securely and return to your thermostat.

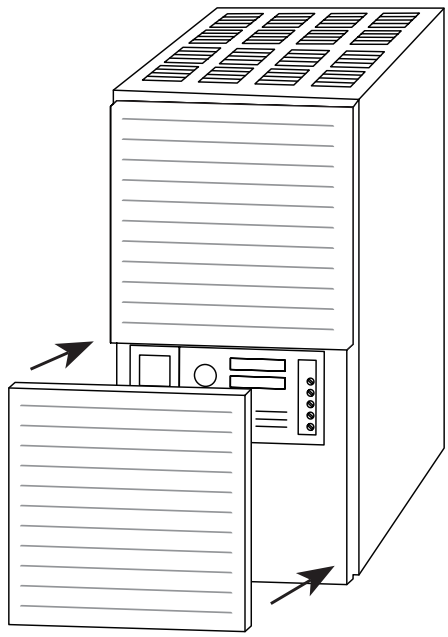

Note: Most HVAC systems have a safety switch will not start if the cover panel is not secure.

Step 16. Disconnect wires

Loosen each terminal and disconnect the wires from your old thermostat. Don't let your wiring fall back into the wall after you disconnect them.

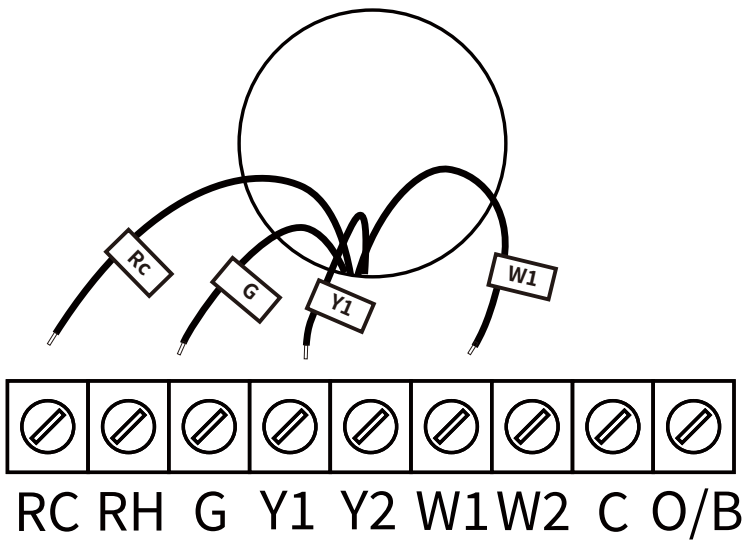

Step 17. Remove your old wall plate

Unscrew the old thermostat from the wall. If your old thermostat has a trim plate, remove it too. You may want to wrap the wires around a pencil so they don't fall back into the wall.

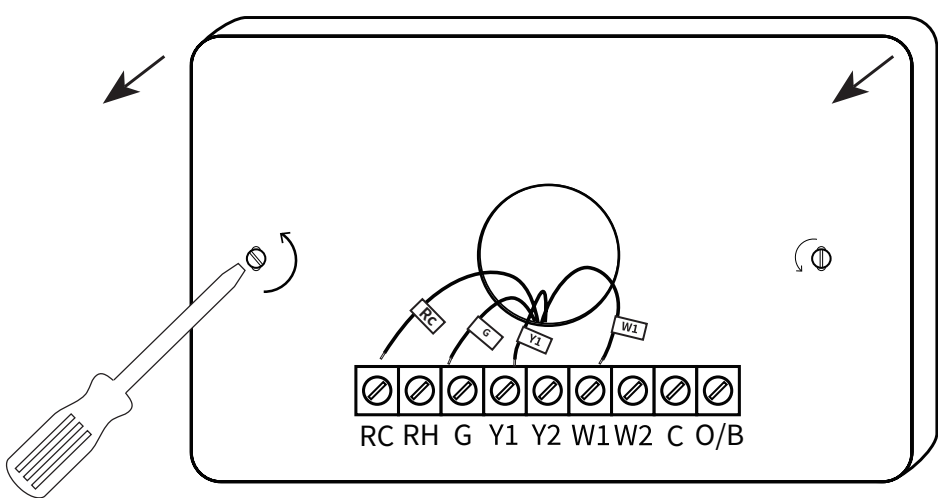

Step 18. Pull the wires through the backplate

Mark where the screws will go. Use the bubble level to make sure the thermostat is straight. If you need to drill new holes in your wall, remove the backplate before doing so.

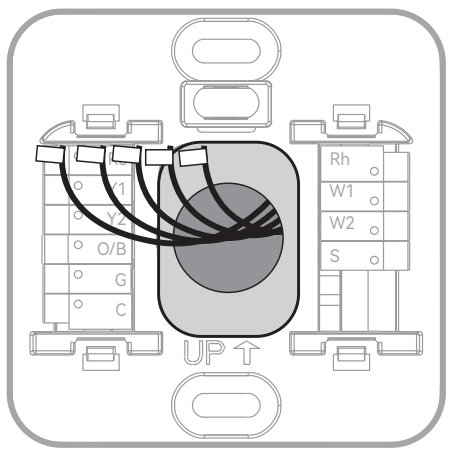

Step 19. Attach the backplate to the wall

Secure your new thermostat's backplate to the wall by using the included anchors and screw. You can drill a hole for the drywall anchors with 3/16' drill bit.

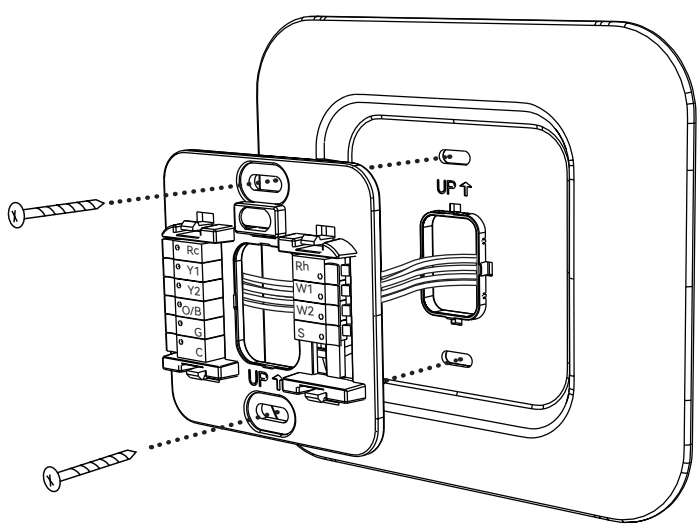

Optional: use the trim plate to cover screw holes or gaps left over from your old thermostat's installation.

Step 20. Connect the wires

Press the terminal block levers down to insert each labelled wire to the matching slot in your backplate. You can refer to the wiring diagram on page 29

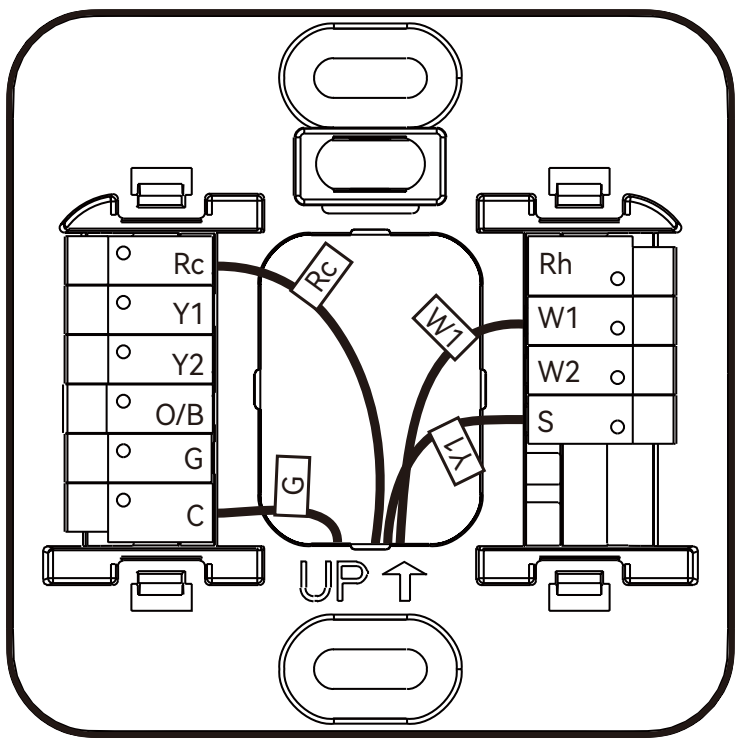

Tug on the wires gently to ensure they are secured. After all the wires are inserted, tuck them neatly back into the wall.

Special wires:

- The C-wire Power Module provides power to thermostats without a C-wire by extending power capabilities using existing wires:

G wire → **C** terminal

Y/Y1 wire → **S** terminal

• If you have more than one R wire (That includes R, Rc, and Rh), connect them as follows:

Wires you have	Wire to Rc Terminal	Wire to Rh Terminal
Rc, Rh	Rc	Rh
Rc, R	Rc	R
Rh, R	R	Rh

• If you only have one R wire (That includes R, Rc, and Rh), connect it to **Rc** terminal.

• If you have E wire (Emergency Heat), connect them as follows:

E wire → **W2** terminal

Step 21. Take a photo of your new wiring

It's important to have a photo of your new wiring. You will need it later when setting the thermostat.

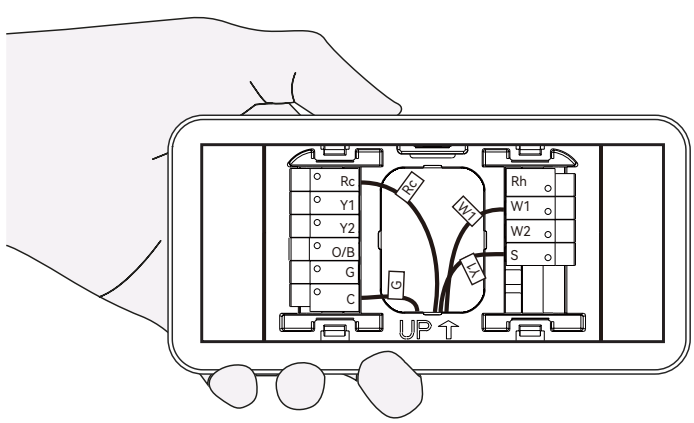

Step 22. Check for air drafts

Air drafts can affect temperature readings. If you feel a draft, seal the hole in the wall.

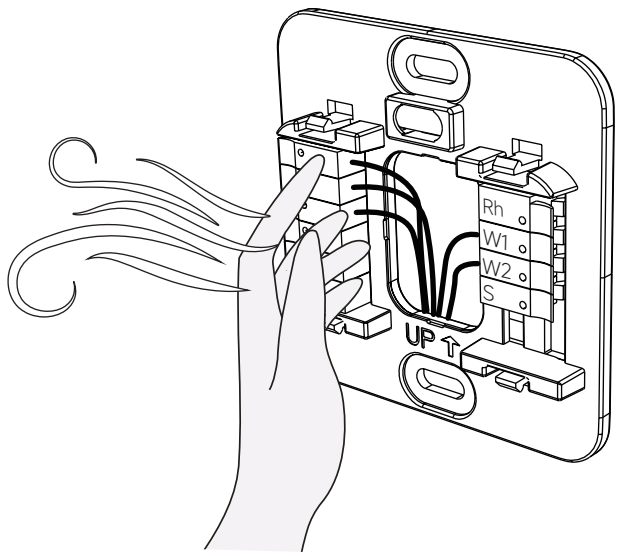

Step 23. Attach the thermostat faceplate

Gently press your Thermostat faceplate onto the backplate until it clicks into place.

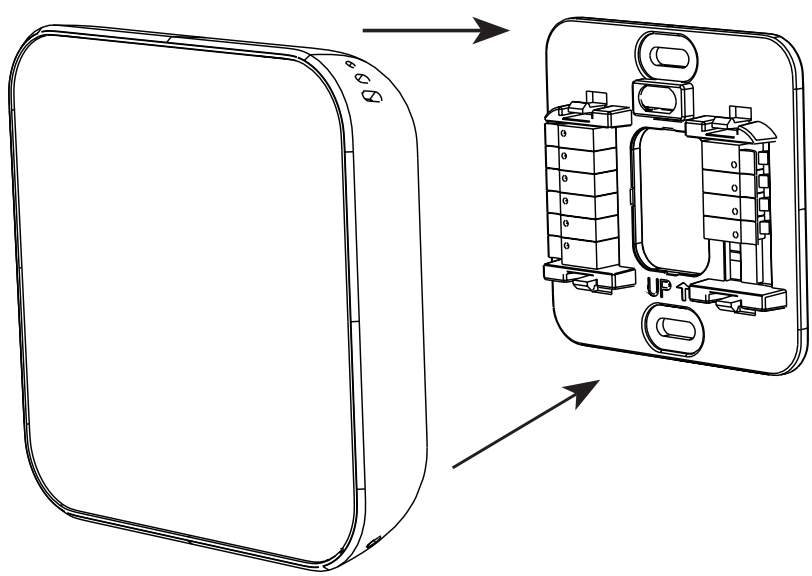

Step 24. Power on your system

Back to your power switch to turn your HVAC system's power back on.

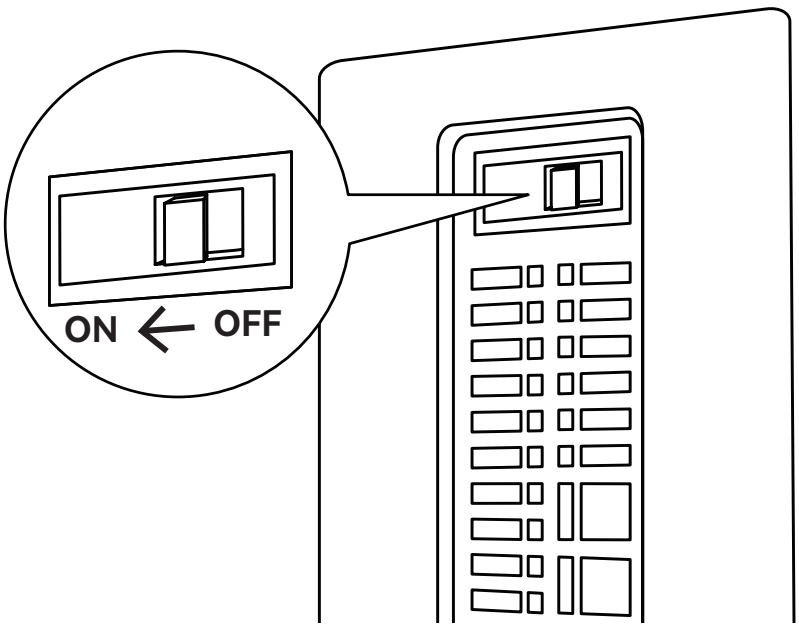

Once powered up, the thermostat's screen will light up and display **'Hi'**. Please go to page 34 to set up the thermostat.

Wiring diagrams

Thermostat Connectors:

Terminals	What it means
Rc	24VAC power from cooling transformer
Rh	24VAC primary for heating
C	24VAC common
W1	1st stage Primary heating relay in conventional system / Auxiliary or Alternative 1st stage heat in heat pump system
W2	2nd stage Secondary heating relay in conventional system / Auxiliary or Alternative 2nd stage heat in heat pump system / Emergency heat
Y1	1st stage Primary compressor contactor
Y2	2nd stage Secondary compressor contactor
G	Fan relay
O/B	Changeover valve for heat pumps
S	Optional Power Module terminal, combine signals from the Y (cooling) and G (fan) wires into a single wire

Below are the wiring diagrams for common HVAC equipment.

Conventional 2 Stage Heating

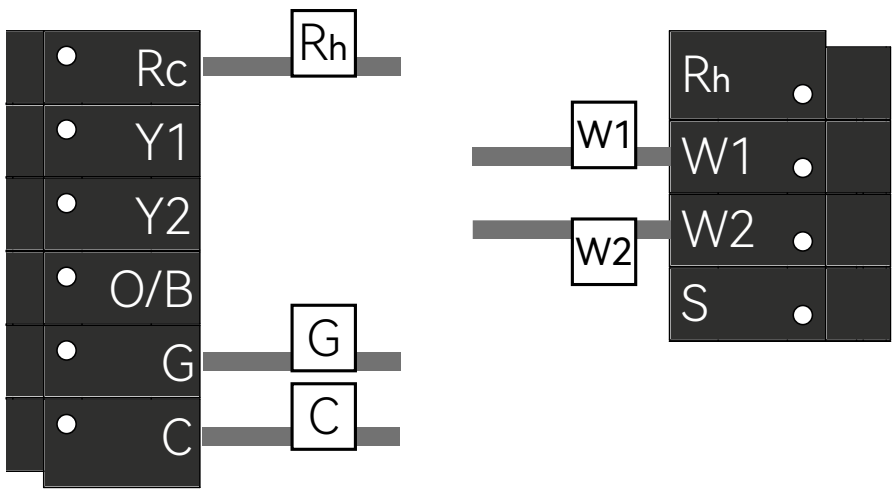

Conventional 2 Stage Heating, 2 Stage Cooling

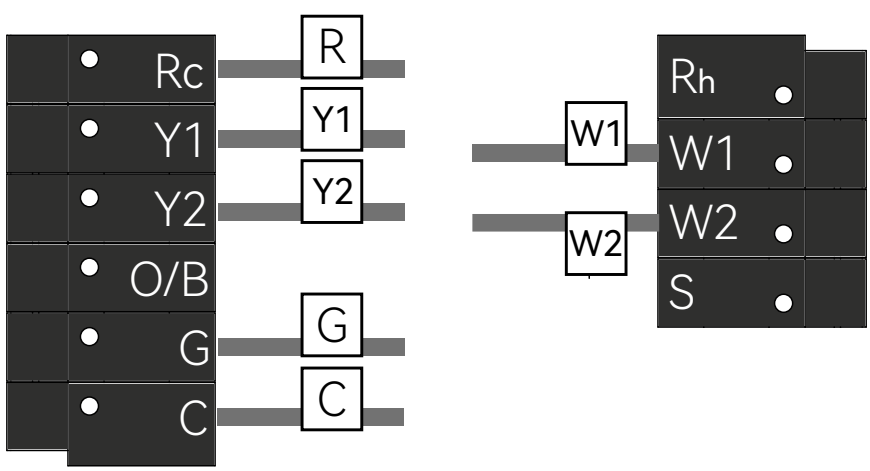

2 Stage Heat Pump with 2 Stage Aux Heat

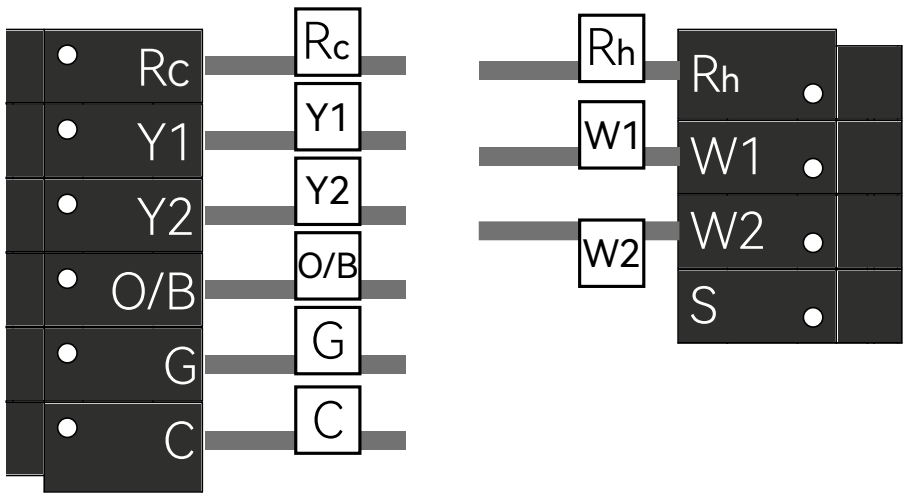

2 Stage Heat Pump with Aux Heat and Emergency Heat

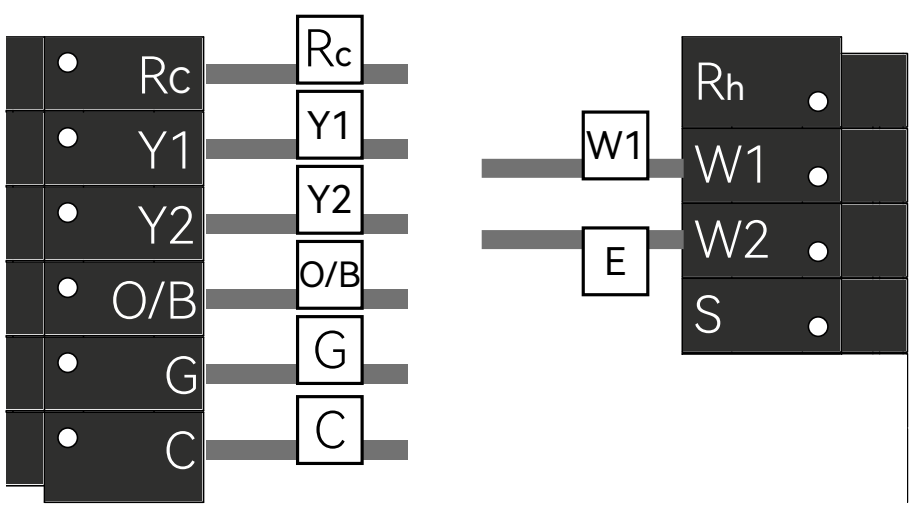

Dual Fuel - 2 Stage Heat pump, 2 Stage Heat

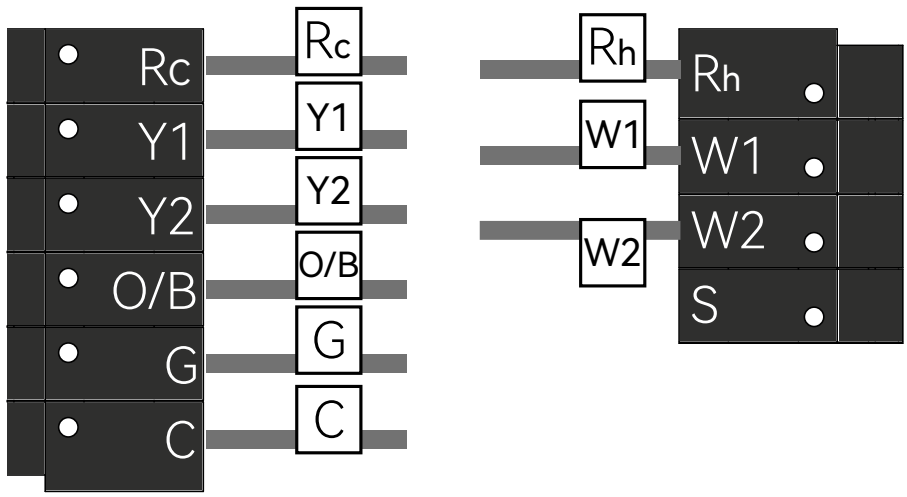

C-wire Power Module wiring

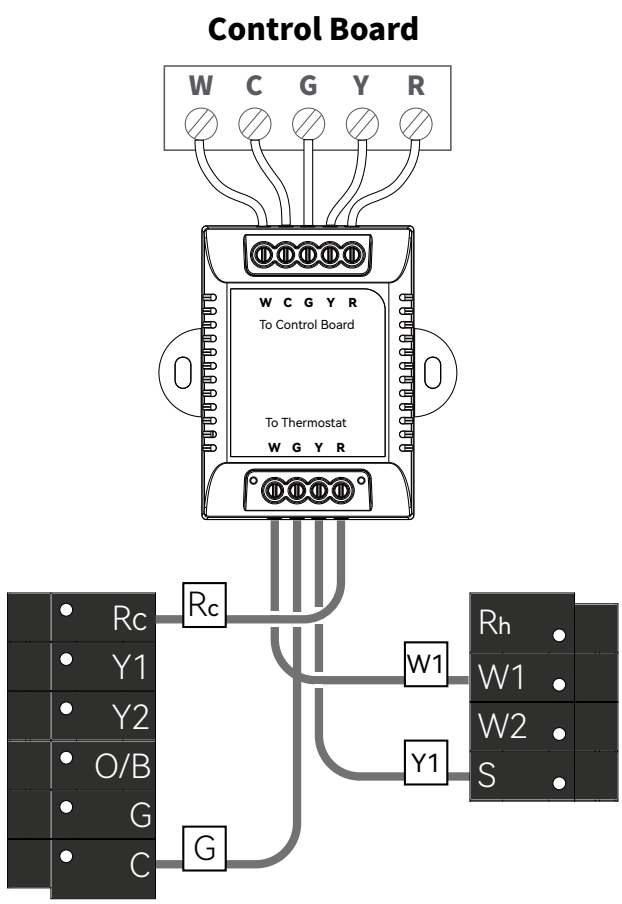

Setup

1. Download the **Smart Life** app on App Store or Google Play.

Download on the App Store

ANDROID APP ON Google play

2. Open **Smart Life** app to create an App account, then click the 'Scan' button in the upper right corner of the App Home page.

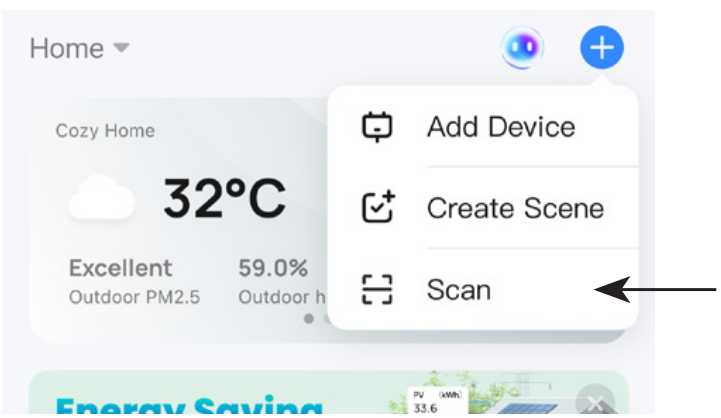

3. Scan the following QR code to configure the network.

Using your thermostat

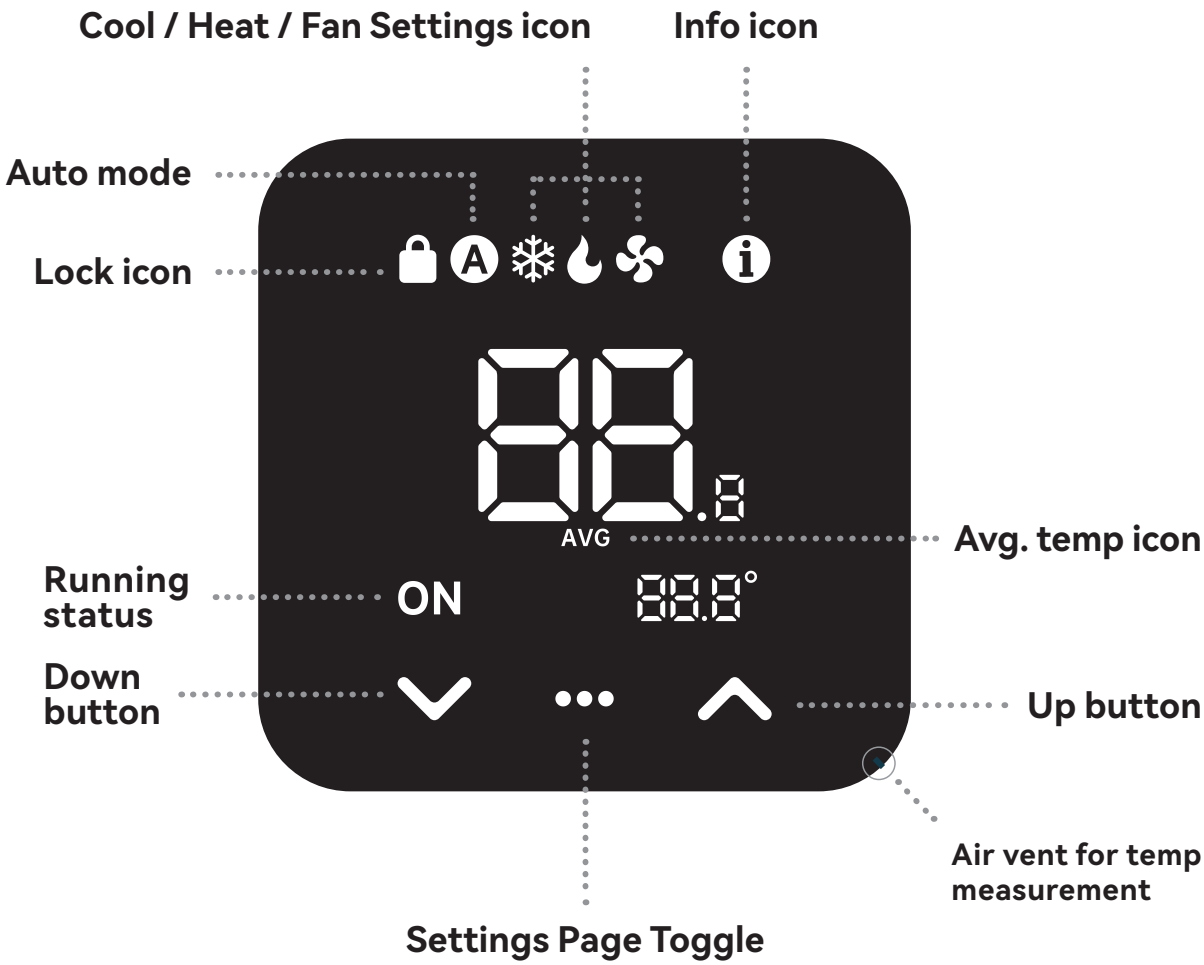

Further description

- **Lock icon**

Appears when using the App to disable specific functions

- **Running status**

Display ON only for the active setting (cooling, heating, or fan) on its respective settings page

- **Avg. temp icon**

Displayed when more than one sensor is involved in the temperature calculation

- **Info icon**

The status gives the following information:

Status	What it means
Green LED blinking	Wait for Wi-Fi pairing
Red LED solid on	Device is connected to the router, but failed to connect to the cloud.
Red LED blinking	Wi-Fi has been configured, but failed to connect to the router.
Orange LED solid on	Using Aux. heat or ALT. Heat or Emergency Heat
Orange LED blinking	System delay to prevent wear.

- **Settings Page Toggle (Center button)**

This button can do the following:
1. Tap once to switch between settings pages (Cool/Heat/Fan Settings)
2. **Change the HVAC mode:** Press and hold it for 3 seconds
3. **Clear Wi-Fi:** Press and hold it. After 10 seconds, a countdown will start. Continue to hold the button until the countdown reaches 0.

- **Factory Reset**

Press and hold the Up and Down buttons for 10 seconds until the screen displays '**RST**'. Hold the Center button until the countdown finishes.

FCC Information

This equipment has been tested and found to comply with the limits for a Class B digital device, pursuant to part 15 of the FCC Rules.
These limits are designed to provide reasonable protection against harmful interference in a residential installation. This equipment generates,
uses and can radiate radio frequency energy and, if not installed and used in accordance with the instructions, may cause harmful interference
to radio communications. However, there is no guarantee that interference will not occur in a particular installation. If this equipment does
cause harmful interference to radio or television reception, which can be determined by turning the equipment off and on, the user is
encouraged to try to correct the interference by one or more of the following measures:
—Reorient or relocate the receiving antenna.
—Increase the separation between the equipment and receiver.
—Connect the equipment into an outlet on a circuit different from that to which the receiver is connected.
—Consult the dealer or an experienced radio/TV technician for help.

This device complies with part 15 of the FCC Rules. Operation is subject to the following two conditions:
(1)This device may not cause harmful interference, and
(2) this device must accept any interference received, including interference that may cause undesired operation.

changes or modifications not expressly approved by the party responsible for compliance could void the user's authority to operate the equipment.

This equipment complies with FCC exposure limits set forth for an uncontrolled environment.
This equipment should be installed and operated with minimum distance of 20 cm between the radiator and your body.
This transmitter must not be co-located or operating in conjunction with any other antenna or transmitter.