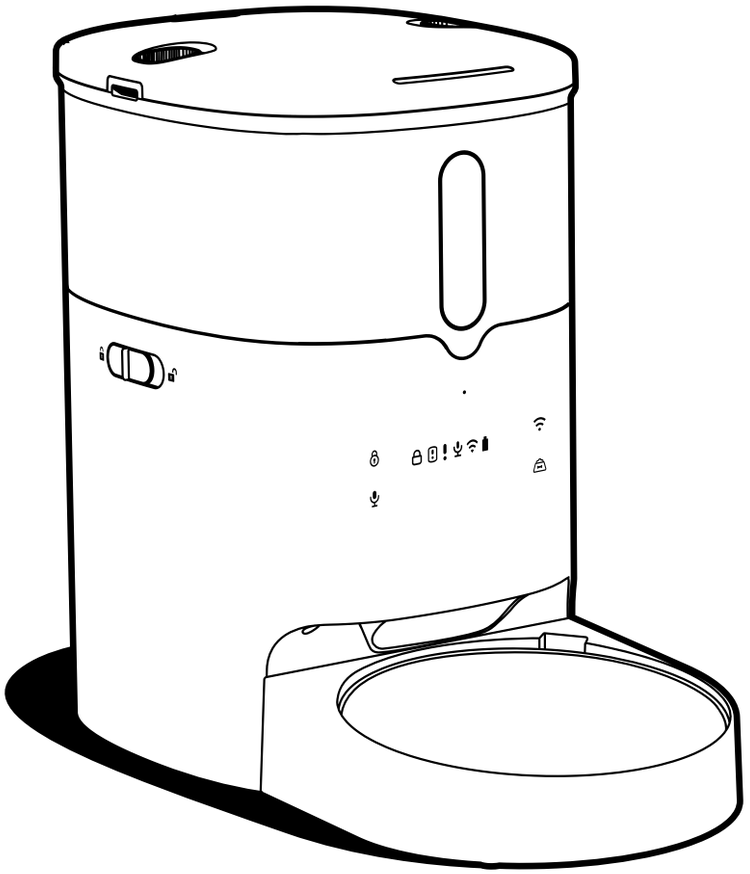

SPF 2300-WB-TY Smart Pet Feeder

Quick Start Guide

Accessory List

*Before installation, pls confirm the accessories.

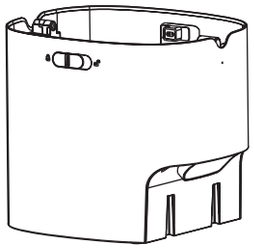

Main unit *1

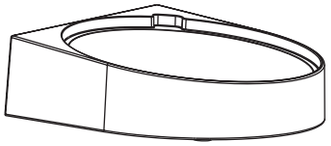

Plastic food bowl *1

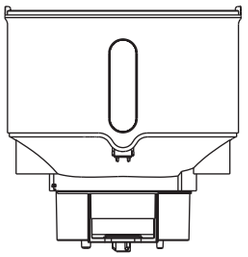

Food bucket *1

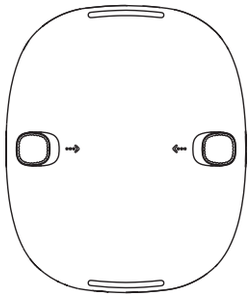

Top cover *1

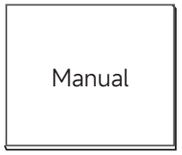

Manual *1

Desiccant *1

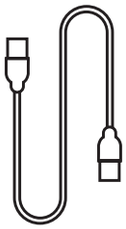

Type C USB cable *1

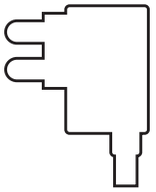

Adaptor *1

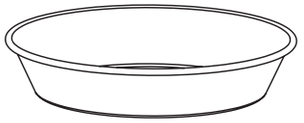

Stainless steel inner bowl *1
(Optional)

Product Introduction

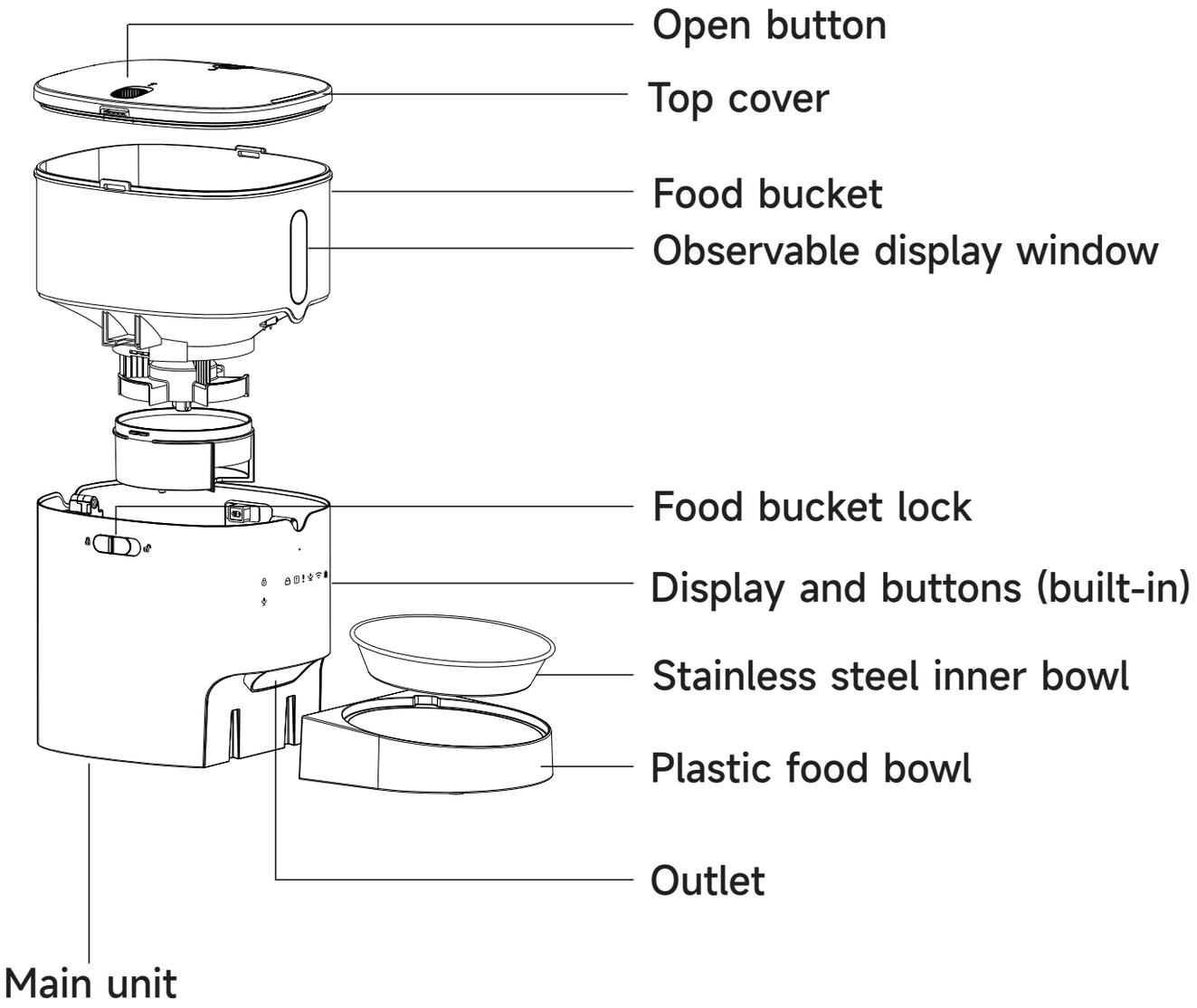

Product Introduction

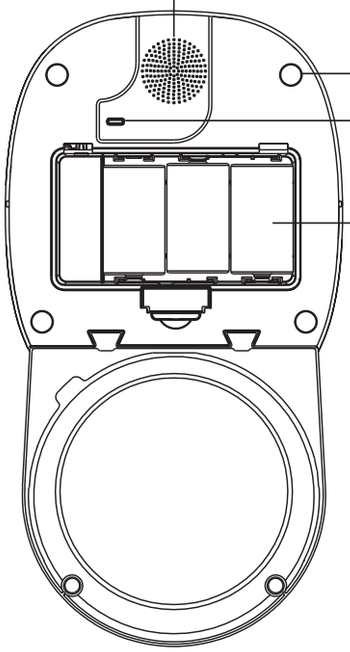

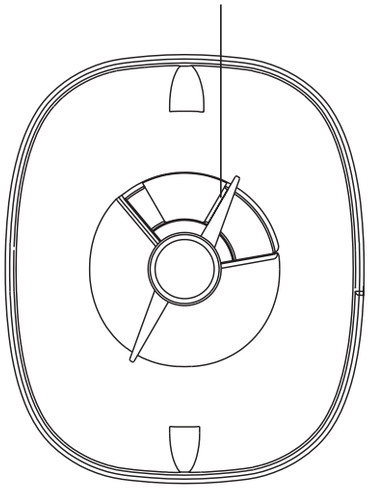

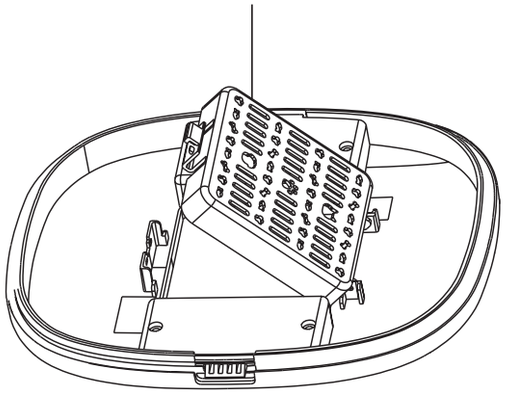

Assemble Guidelines

1 Power on the device (Note: The device supports dual power supply)

It can be powered by a power adapter (insert the adapter plug into the power adapter jack on the base) , or three D cell batteries, or both.

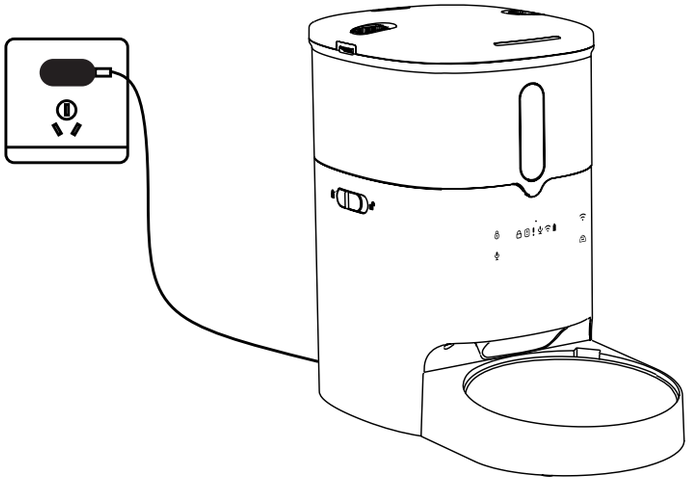

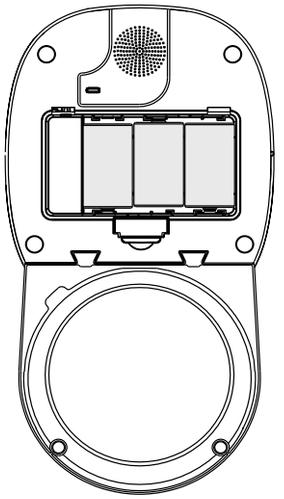

2 Installation

1. Place the main unit on a horizontal surface and install the plastic food bowl;
2. Place the stainless steel inner bowl in the plastic bowl;
3. After confirming that the bucket is installed in place, lock the bucket lock;
 - Scenario 1: The bucket already contains pet food. Please place the bucket on the main unit according to the correct orientation, press the lock button to unlock the device, then long press the manual feeding button for 3 seconds, the fault indicator icon will flash " ! ", the main unit will start the bucket installation auxiliary function automatically. In this process of function operation, please keep the bucket in a right orientation with your hand and wait for the accurate installation of the bucket
 - Scenario 2: If there is no food in the barrel, but still cannot be installed in place. You can repeat the operation in Scenario 1, or please ensure the bucket in the correct installation position, and at the same time, turn the silicone rotor blade to let the bucket installed in place
4. If the bucket is empty, please fill the bucket with pet food;
5. Put the desiccant into the desiccant box, and cover the top cover after adding the food to the bucket to complete the installation

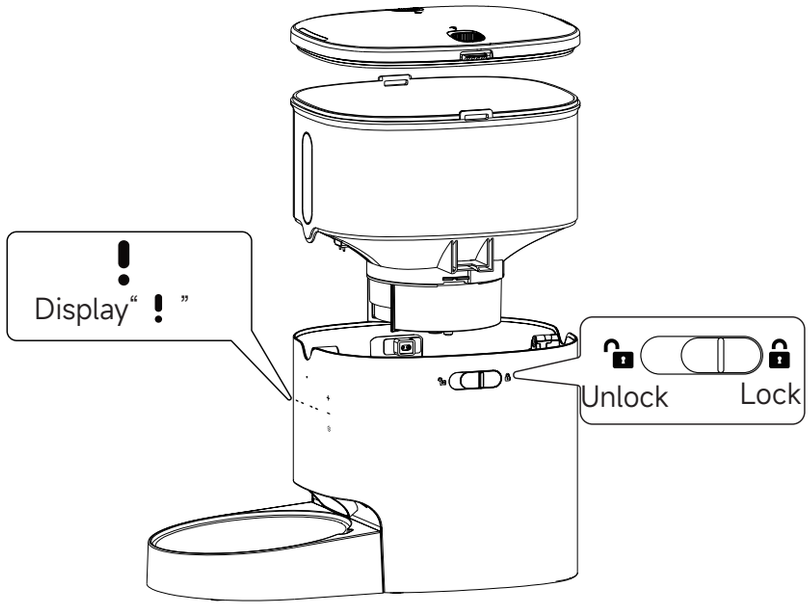

Pls scan the QR code to view the installation video.

Operating Panel Introduction

Lock button

Hold for 3 seconds to unlock other buttons and screens

Wi-Fi button

(Unlocking state) Long press the button for 5 seconds to reset the devcei and enter to AP mode network configurating, the white light will flash slowly; Long press again 5 seconds to switch the network configuration to EZ mode, the white light will flash quickly.

Recording button

Holding the button for 3 seconds, when you hear the "beep" sound once and the recording icon lights up which means the recording will start (at most 6 seconds). When you release the button and hear the "beep" sound twice, the recording will be saved.

Manual feeding button

• (Unlocking state) Long press the button for 3 seconds to start the "food bucket installation function". The Fault indicator will flash. After finishing installation, it will stop flashing automatically.
• (Manual feeding state) Short press 1 time will distribute 1 portion food, 7-10g per portion; Long press will distribute food continually.

Food shortage/Food run out icon

- Food shortage: Red light flashing
- Food run out: White light flashing

Lock icon

Lights up when other keys are locked

Fault indicator icon

- Food stuck: Blue light flashing
- Food jam: Red light falshing

Wi-Fi icon

- Waiting for network configuration:
  The icon lashing in white
- Network configuration succeeded:
  The icon steadying on in white
- Disconnected:
  The icon is off

Battery power icon

- No battery: Blank
- Low battery: Red light
- High level: White light

Recording indicator icon

Light up when recording

Operating Guideness

1. Download App

Please download the application: **Smart Life** from App Store or App Market. Also you can scan below QR code to download and install.

2. Device Operation Video

Please scan below QR code to watch the operation video.

3. Manual Feeding Operation

• Long press the lock button for 3 seconds to unlock the device

• Short press the manual feeding button to distribute one portion food, 7-10g per portion; Long press will distribute pet food continually

Cleaning Instruction

1." ✔ " means washable fitting, " ✖ " means unwashable.

2. Do not wash the main unit, only can be wipped by soft cloth.

3. Pls clean the stainless steel inner bowl every day to keep your pet's health.

4. When changing pet foods, the food bucket and plastic food bowl can be removed for cleaning.

① Remove the plastic food bowl from the main unit (Figure 1)

② Unlock the bucket lock, and draw up the food bucket (Figure 2)

③ Please clean and drain the bucket and stainless steel inner bowl (wipe dry) before installing and using.

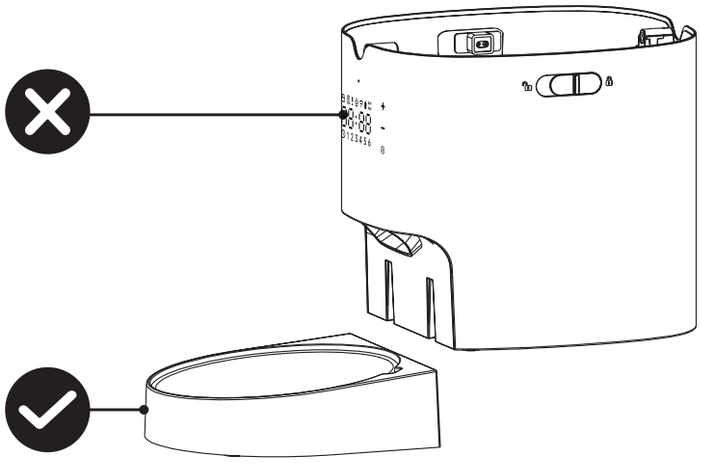

Figure 1

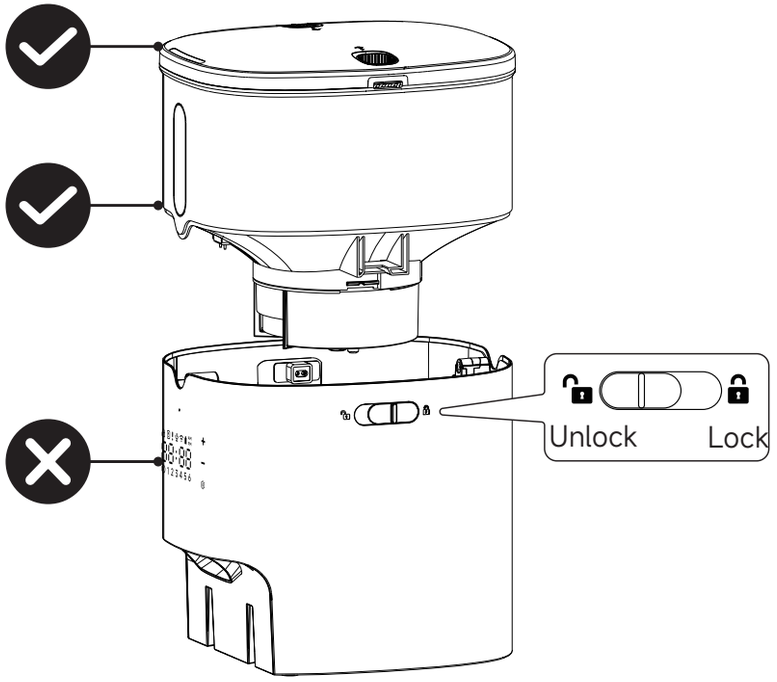

Figure 2

Letter to the Users

Thank you for choosing our pet feeder products. Our company is committed to creating a better life for you and your pet with science and technology.

In order to enable you to correctly use and maintain the product, please read this instruction manual carefully before operation and keep it properly for reference.

Once installed or used, the following safety instructions have been carefully read and accepted.

Our company is not responsible for any accidents and losses caused by illegal operations and does not assume any legal liability.

Our company reserves the right of interpretation and modification of this statement.

Safety Notice

*Failure to comply with the following terms may result in the unavailability of the product or other unexpected losses. To reduce the risk of injury, monitor appliances closely when they are used near children.

- Do not immerse the base in water to avoid damage to the control panel and other electronic components.
- Do not use it outdoors or in damp environment such as toilet. Check and maintain regularly to ensure that the grain is delivered correctly.
- Do not use wet or damp food
- Do not place any foreign objects in the pet feeder
- This product is only suitable for pet food (diameter between 5-15mm), larger pet food may get stuck.
- Do not place the product on a high place. If the product falls down, it may cause damage or pet safety problems.
- Do not use the feeder for other purposes.
- Please use accessories recommended or sold by the manufacturer and do not modify the pet feeder without authorization.
- In addition to maintenance personnel, other people are not allowed to repair this product, so as to avoid causing various accidental injuries.
- Remove the battery and unplug the power cord when not in use and before cleaning.
- Please use in indoor environment, do not place in the sunlight can be used, it will affect the device work; Keep away from ignition.
- This device is in low voltage mode, but pets biting wires will still cause electricity leakage, please use the correct guidance.
- Keep it horizontal. Do not knock over the device. Otherwise, the device may not work properly.
- If the owner needs to go out, please check the battery in the battery box to ensure sufficient battery power (this product is only suitable for alkaline batteries).

Battery Powered Notification

• In battery-powered state, the APP does not support remote control

• The feeder will distribute the food regularly according to the feeding schedule, and push the feeding message and update the feeding status

• The feeder will be on standby automatically after each feeding as planned, and all the indicators will be turned off

Specification

Capacity	• 3L
Auto Feeding Schedule	• 0-6 meals/day (0-50 portions/meal)
Power	• 5V DC • Backup battery: D cell battery * 3 pcs
Dimension	• 337x179x290mm
Consumption	• < 0.5W
Color	• White / Black

FCC Warning

This device complies with part 15 of the FCC Rules. Operation is subject to the following two conditions:
(1) this device may not cause harmful interference, and
(2) this device must accept any interference received, including interference that may cause undesired operation.
Any changes or modifications not expressly approved by the party responsible for compliance could void the user's authority to operate the equipment.
NOTE: This equipment has been tested and found to comply with the limits for a Class B digital device, pursuant to Part 15 of the FCC Rules. These limits are designed to provide reasonable protection against harmful interference in a residential installation. This equipment generates, uses and can radiate radio frequency energy and, if not installed and used in accordance with the instructions, may cause harmful interference to radio communications. However, there is no guarantee that interference will not occur in a particular installation.
If this equipment does cause harmful interference to radio or television reception,
which can be determined by turning the equipment off and on, the user is encouraged to try to correct the interference by one or more of the following measures:
-- Reorient or relocate the receiving antenna.
-- Increase the separation between the equipment and receiver.
-- Connect the equipment into an outlet on a circuit different
from that to which the receiver is connected.
-- Consult the dealer or an experienced radio/TV technician for help.
To maintain compliance with FCC′ s RF Exposure guidelines, This equipment should be installed and operated with minimum 20cm distance between the radiator and your body: Use only the supplied antenna.