IOT WIRELESS HUMIDITY SENSOR USER MANUAL

Doc# 20029500-25

Revision 1.0

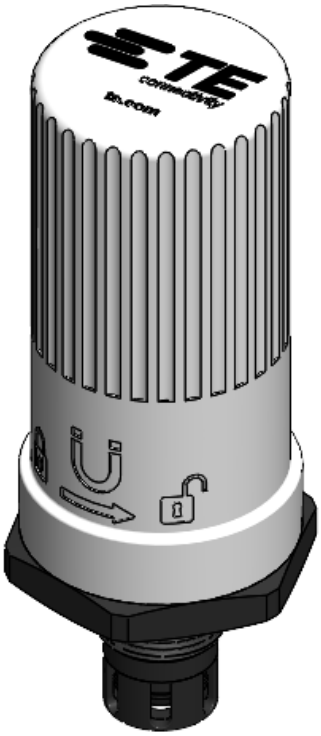

REVISIONS

DATE	Revision	Change Description	Prepared by	Reviewed by	Approver
19/06/2023	Rev 1.0	Initial draft version	Adel BEN ABDELKADER	Vincent Wong	Nicolas PECQUET

Contents

1 GLOSSARY 6

2 GLOBAL OVERVIEW 7

3 MEASUREMENT PROCESS 8

4 DATA PROCESS 9

4.1 DATA PROCESSING 9

4.1.1 Delta 9

4.2 TRIG MEASUREMENT COMMAND 9

4.3 DATALOG DATA 9

4.4 LIVE MODE 9

4.5 THRESHOLD EVENT MANAGER 10

4.6 SYNC BETWEEN DIFFERENT SENSOR 11

5 COMMUNICATION 12

5.1 PRELIMINARY PHASE: DURING 1HOURS AFTER POWER ON 12

5.1.1.1 BLE Behavior 12

5.1.1.2 LoRaWAN & BLE behavior 12

5.2 NOMINAL MODE PHASE: 1 HOUR AFTER POWER ON 14

5.2.1.1 Keep Alive 14

5.2.1.2 BLE 14

5.2.1.3 LoRaWAN 15

5.2.1.4 BLE connected Mode 16

5.2.1.5 Special event: Magnet 17

5.3 BLE COMMUNICATION 18

5.3.1.1 BLE Connected Mode 18

5.3.1.2 Access to Connected mode 18

5.3.1.3 Exiting from Connected mode 18

5.3.1.4 DFU Mode: Device Firmware Update 18

5.3.1.5 List of services available 19

5.4 LORAWAN COMMUNICATION 19
5.4.1.1 General information 19
5.4.1.2 Frequency plans 19
5.4.1.3 Data rates 19
5.4.1.4 TX power 20
5.4.1.5 Time on air limitation 21
5.4.1.6 Mode of operation 21
Enrollment 21
5.5 PAYLOAD DESCRIPTION 24
5.5.1.1 Specific BLE Frame format 24
5.5.1.2 Keep alive [Not implemented] 24
5.5.1.3 BLE Generic Advertising message format 24
5.5.1.4 Specific LoRaWAN Frame format 25
5.5.1.5 Uplink message (Platform -> Gateway) 25
5.5.1.6 Downlink message (Gateway -> Platform) 26
5.5.1.7 GENERIC PAYLOAD FORMAT 28
5.5.1.8 Global overview of payload available depending on communication 28
5.5.1.9 Device status 30
5.5.1.10 Device Type 30
5.5.1.11 Battery 31
5.5.1.12 Bluetooth 31
5.5.1.13 Internal platform temperature 32
5.5.1.14 Keep Alive 32
5.5.1.15 Data Collection 33
5.5.1.16 Last data from sensor 35
5.5.1.17 Live mode 35
5.5.1.18 Threshold 36
5.5.1.19 Datalog 39
5.5.1.20 LoRaWAN platform 40
6 BATTERY 42
6.1 SAFT LS17330 42
6.2 BATTERY LIFE 43

6.3 BATTERY REPLACEMENT 43
7 MAGNETIC SWITCH 44
8 LED 45
9 DIMENSIONS 46
10 MOUNTING CONSIDERATIONS 46
11 CERTIFICATIONS & COMPLIANCES 47
12 REGLUATORY STATEMENTS 47
FCC and IC 47
13 EU CONFORMITY 48
14 ORDERING INFORMATION 49

1 GLOSSARY

- ***Sensor*** is the sensing element that transform physical value to voltage value. It could have digital or analog interface.
- ***Platform*** is the generic electronic and software used to acquire data and send data over RF communication.
- ***System*** is the combination of a sensor and the platform.
- ***Product*** is specific system.
- ***Single point:*** This is a category of sensor that provide only one data per measure. This category is humidity sensors.

2 GLOBAL OVERVIEW

The system operates as a smart device. It offers sensor acquisition, processing capabilities, analysis, and wireless communication capabilities.
Processing and analysis functions offer to the end user flexibility and cover most of the application.
The device computes Humidity or internal temperature data in a smart way:

- Delta detection,
- raw data.

Threshold can be configured. User has to choose between data to feed threshold.

BLE only system, data are sent over BLE advertisement. BLE is used to configure the sensor and access to others feature as datalog, live data, ...

If the system has LoRaWAN connectivity, it will use BLE for local configuration during 1 hour.
LoRaWAN connectivity will be used to send sensor data periodically. Once configure and connected to LoRaWAN network downlink frame can be also used to configure the device.

The product has two Bluetooth modes:

- Advertisement Mode: provides data periodically and help to go to Connected Mode
- Connected Mode: mode for configuration and advanced features. Each advertisement allows the opportunity to user to switch to Connected mode. It's the only way to go into connected mode.

3 MEASUREMENT PROCESS

Platform acquires digital data from the sensor. On acquisition chain system uses:

- Sensor power supplies: A separate power supply is used for the sensor at 2.8V
- A communication bus (I2C or SPI): It can read data from the memory of the sensor. (Data, Calibration, …)
- The system acquires and stores data.
- It applies sensitivity to the raw value

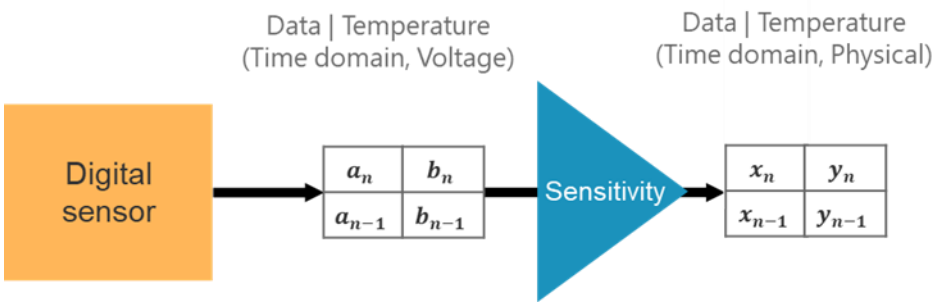

Data collection diagram

At every measurement interval, platform power up the sensor and ask a new acquisition and the sensor provides a data and temperature. Both data are stored.

When measurement interval is changed a new measurement is done when the new value is received by the system.

4 DATA PROCESS

4.1 DATA PROCESSING

4.1.1 Delta

Time domain data are used to calculate a variation between two data.

$$Delta(n) = x_n - x_{n-1}$$

4.2 TRIG MEASUREMENT COMMAND

When BLE connected mode is activated, user can ask a new measure without waiting measurement interval.
After a Trig measurement command, the next measurement will happen after measurement interval.

4.3 DATALOG DATA

The system store in memory 4096 data. When the memory is full the oldest data store is replaced by the new one and so on.

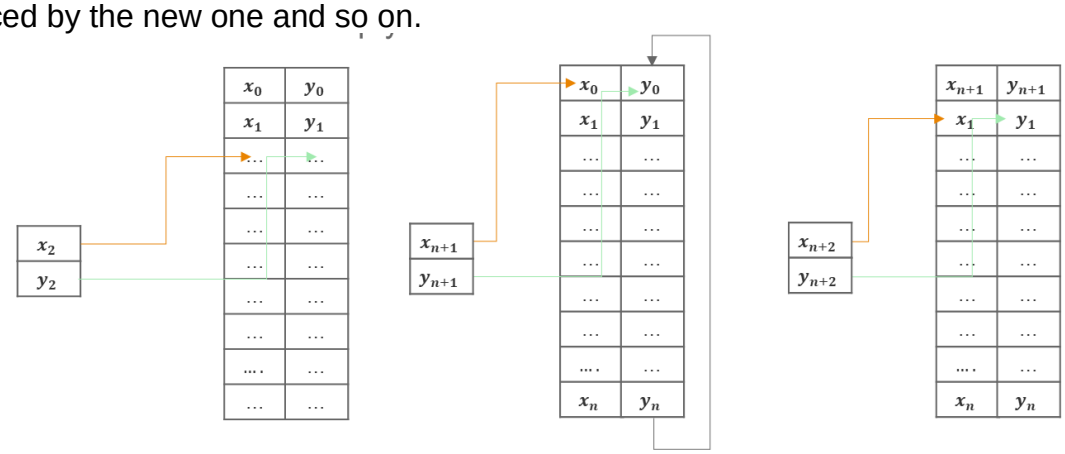

Data stored in memory are available on BLE connected mode.
Last data store in memory will have index 0 whatever its location into memory.

4.4 LIVE MODE

When connected mode is activated, user can get access to a live mode. It will acquire data at new measurement interval fixed at 100ms and provide all data to be available in “real time”.

When user stop BLE connection the system come back to its current configuration and applies regular measurement interval.

Note: if a threshold is reached during live mode the system will use Threshold measurement interval otherwise it uses standard measurement interval.

4.5 THRESHOLD EVENT MANAGER

Threshold event manager allows user to have a specific configuration when a value reach a level (main sensor and/or secondary sensor).

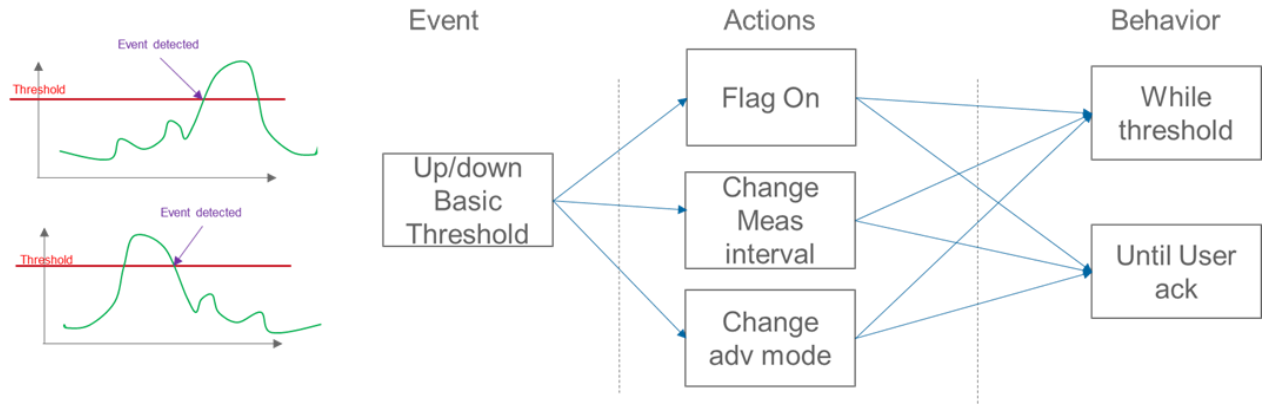

- Greater than/Lower Than Threshold: Every new acquired value is compared to a threshold.

$$Threshold_{greater} = x_n > \text{Thr}$$

Threshold high formula

$$Threshold_{lower} = x_n < \text{Thr}$$

Threshold low formula

- Actions: When a threshold is reached, the system will set a flag. This flag is available on advertisement frame. Upon user configuration the system can change advertisement mode and measurement interval. This configuration can be done on BLE connected mode.

- Behavior: This new configuration can last while the threshold is reached or until user clear Threshold flag. All this configuration can be done on BLE connected mode.

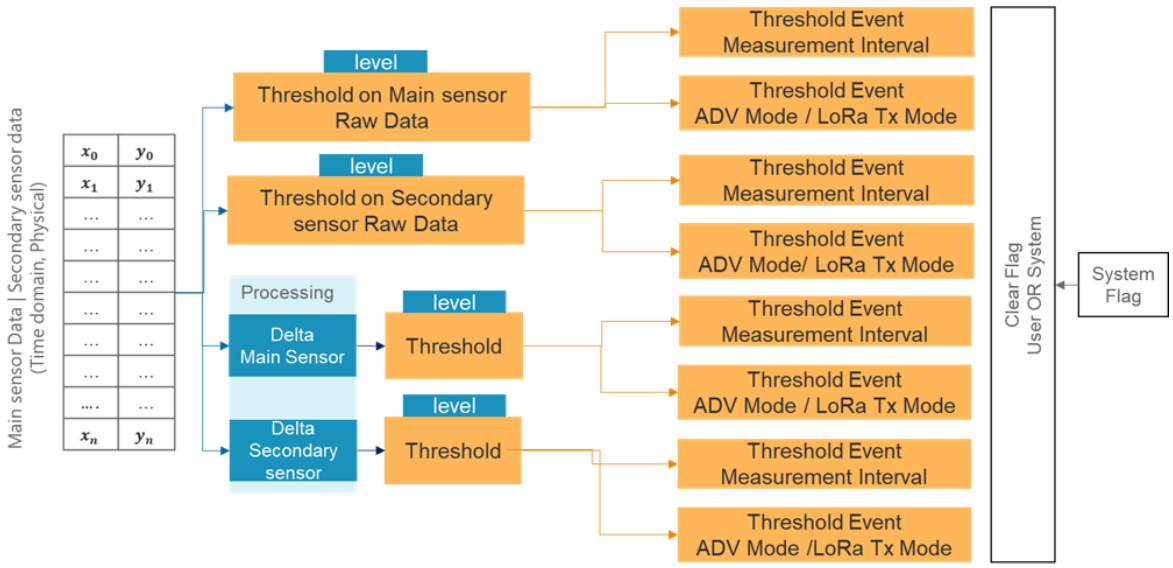

Threshold manager bloc diagram

At configuration the user need to define:

- Data to consider: Main sensor and/or Secondary sensor
- Data to use: Raw data and/or Delta
- Threshold : Level and type: “greater than” or “smaller than”
- Event after threshold: Flag, Measurement interval, Advertisement mode

Every new acquired value is compared to a threshold. On threshold the sensor will do a specific action and behavior defined by user:

- Set up flags to inform customer that a threshold is reached
- Change BLE Advertisement mode (only on event mode activated) or Change LoRaWAN TX mode (only if LoRaWAN connectivity is available and event mode activated)
- Change measurement interval (only on event mode activated)

If there are conflict when several Threshold are reached:

- System will use the lowest measurement interval and at each new threshold reached or released a new configuration analysis will be done
- System will use first Periodic Mode and then On measure mode

4.6 SYNC BETWEEN DIFFERENT SENSOR

If the user configuration can manage multiple BLE connection, user can synchronize several sensors. To achieve that user has to:

- Activate connected mode on several sensor
- Send a Trig measurement command to all send.

All sensors will be synchronized with a resolution of 1s. All measurement will be done during the same timeslot.

5 COMMUNICATION

BLE advertisement frame will have the same format as BLE only system.
BLE provide 3 main states:

- Advertisement Mode: periodic data available
- Connected mode: advanced data analysis and sensor configuration
- Idle: low power mode with no activity

LoRaWAN communication can:

- Receive configuration for central system
- Send requested configuration parameters
- Send data
- Send Keep Alive

The device includes a LoRaWAN® MAC 1.0.3 rev A compliant interface (see LoRaWAN® 1.0.3 Specification). It operates as a Class A end-device.

5.1 PRELIMINARY PHASE: DURING 1HOURS AFTER POWER ON

5.1.1.1 BLE Behavior

When the device is powered on, a yellow LED blinks to confirm the proper battery insertion.
From the sensor startup and for 1 hour, the device advertises every 1 sec. This allows user to configure the product by switching to connected mode.

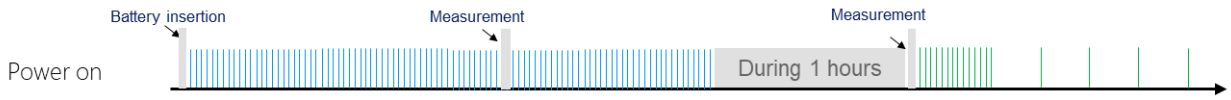

ADV behavior during 1rst hour

5.1.1.2 LoRaWAN & BLE behavior

When initiating a measurement and a LoRaWAN communication, BLE is disable. Between BLE advertisement OFF and LoRaWAN communication ON it takes 4000ms.
The device performs an initial set of acquisition on the factory default settings.
The Join Request process allows customer identification and connection to the Lora Network. Procedure is performed as follows:

- At startup, a request to join the LoRaWAN Network (called “Join Request”) is sent from the unit to the Network.
- If Join Request is accepted, connection is made, and sensor can begin sending data via upstream links to the LoRaWAN network.
- If Join Request procedure fails, unit tries again every (x) seconds until request is accepted.

Join Request signal from the LoRaWAN Radio transmitter is never transmitted simultaneously with an advertising or connection signal from Bluetooth Radio transmitter.
If this LoRaWAN Join Request procedure succussed, the data is transmitted through uplink messages.

When initiating LoRaWAN communication, BLE is disable. Between BLE advertisement OFF and LoRaWAN communication ON it takes 4000ms.
Once LoRaWAN communication is ended, system will reactivate BLE. It takes 950ms between LoRaWAN communication OFF and BLE communication ON.
During this phase user can configure the system by using BLE connected mode.
This phase can be activated locally with magnet.

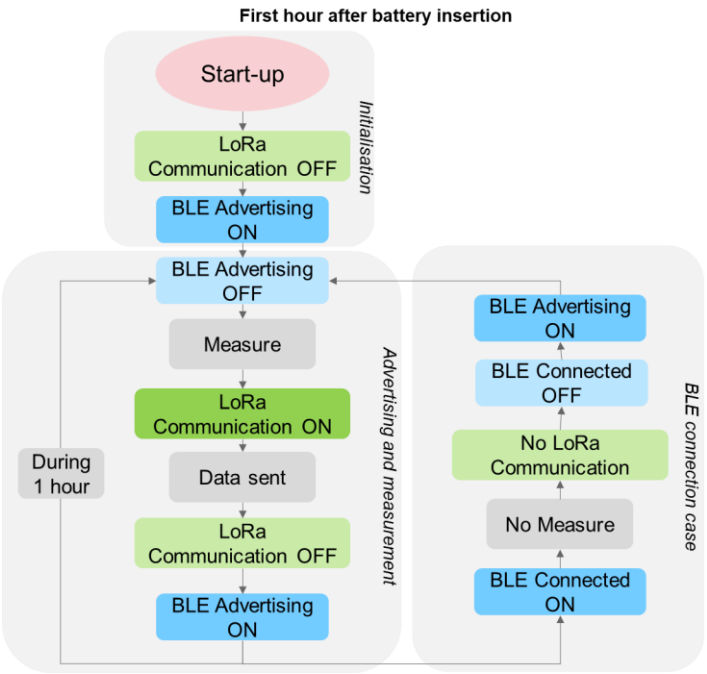

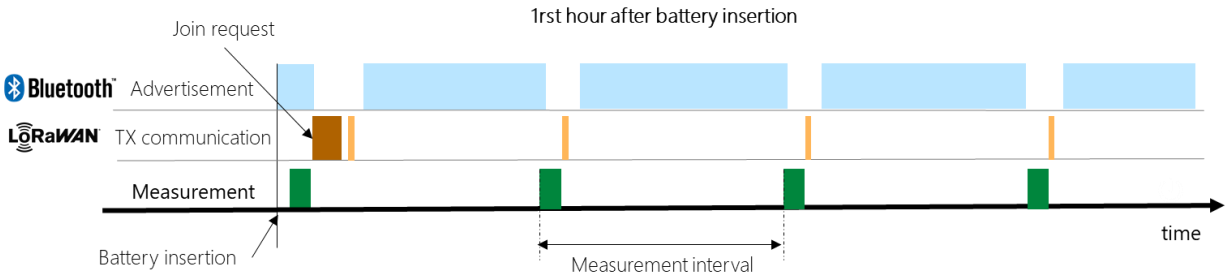

ADV & LoRaWAN behavior during 1rst hour

5.2 NOMINAL MODE PHASE: 1 HOUR AFTER POWER ON

5.2.1.1 Keep Alive

A keep alive can be sent at least 1 time by day. Keep Alive interval can be change by user with define value 2 hours, 4 hours, 12hours and 24hours (default value). This configuration can be made over BLE and LoRaWAN.
Keep alive frame is different than Periodic Frame.

5.2.1.2 BLE

- LoRaWAN is disable.
- The device acquire data from the sensor. Then it processes the measurements depending on the default parameters.
- Data are sent over BLE depending on BLE_ ADV_MODE
- Once BLE advertisement is ended, system go on idle state.

There is three BLE advertising mode:

- <u>ADV Burst + Periodic Mode: (Default ADV mode)</u>
  After each measurement the system will send advertisement every 1s interval for 15 seconds. This will give multiple chances to the gateway to connect to the device. After 15 seconds, the device will advertise at 10s interval till the next measurement. During, this phase, the connection between the system and an external device could be more difficult. Between two measurements, the data into the advertisement frames is the same. The payload is only updated after every measurement interval.

- <u>ADV On Measure Mode:</u>
  After each measurement the sensor will send advertisement every 1s interval for 15 seconds. This will give multiple chances to the gateway to connect to the device. After 15 seconds, the device will stop to advertise.
  This ADV Mode can be selected by using BLE services **ADV_CFG** for current state and **THS_ADV_MODE** if a threshold is activated

- <u>ADV Silent Mode:</u>
  After each measurement the sensor won't send advertisement.
  This ADV Mode can be selected by using BLE services **ADV_CFG**.
  This mode is not recommended if threshold is not activated and **THS_ADV_MODE** is not configured. The only way to change configuration over BLE is to use the magnet and activate advertisement (see 3. Magnet Event).

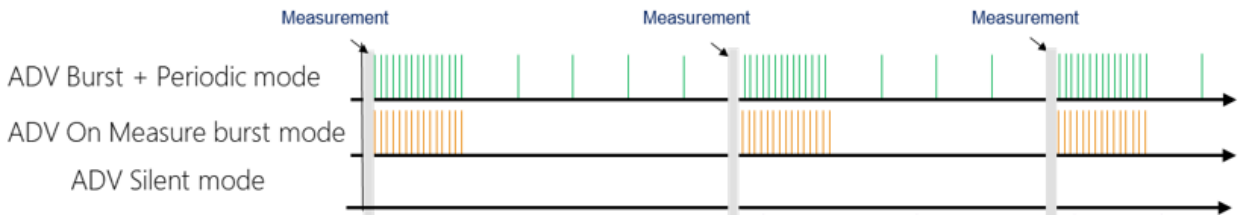

Comparison of ADV mode

After a measurement, if a threshold is reached, the system will use threshold configuration (ADV mode and Measurement interval).

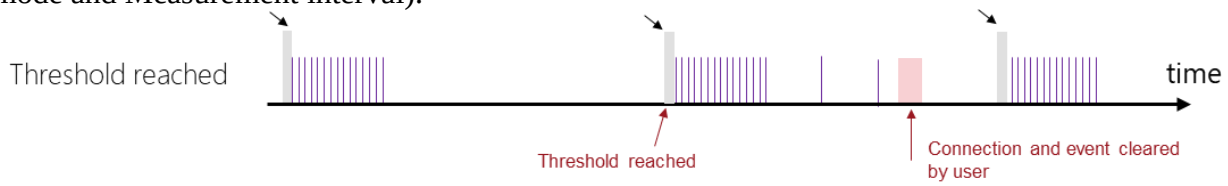

Example of ADV On Measure Mode and ADV Periodic mode after a threshold

5.2.1.3 LoRaWAN

- BLE is disable.
- The device acquire data from the sensor. Then it processes the measurements depending on the default parameters.
- If this LoRaWAN join procedure succeed, the data is transmitted depending on LoRaWAN Measurement Mode.
- Once LoRaWAN communication is ended, system go on idle state.

There is three LoRaWAN communication mode:

- **<u>LoRaWAN On Measurement Mode:</u>** a data is sent every measurement

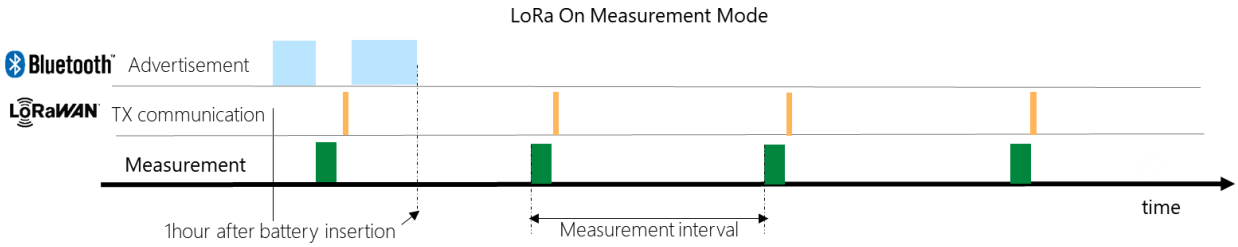

Example On Measure LoRaWAN Mode

- **<u>LoRaWAN Silent Mode:</u>** System don't send data periodically. It measures and store data. It will send data only if LoRaWAN Measurement Mode is selected into threshold configuration.

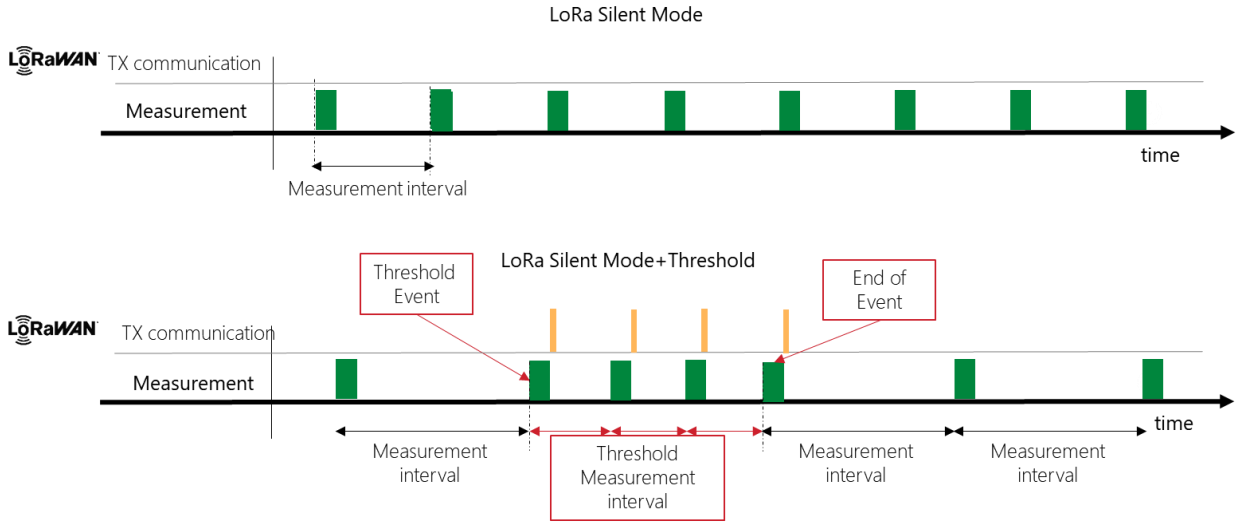

Example On Event LoRaWAN Mode

Note: If this mode is selected and no event is detected, configuration over LoRaWAN can be done only when keep alive is sent. TE IoT platform is a LoRaWAN Class A and will listen only when it sends uplink data to gateways.

5.2.1.4 BLE connected Mode

If the sensor advertises the user can initiates a connection, the sensor switches into BLE Connected mode. While a communication is established between the sensor and the master, measurements and LoRaWAN transmissions are frozen.
This mode is used to configure the device parameters.

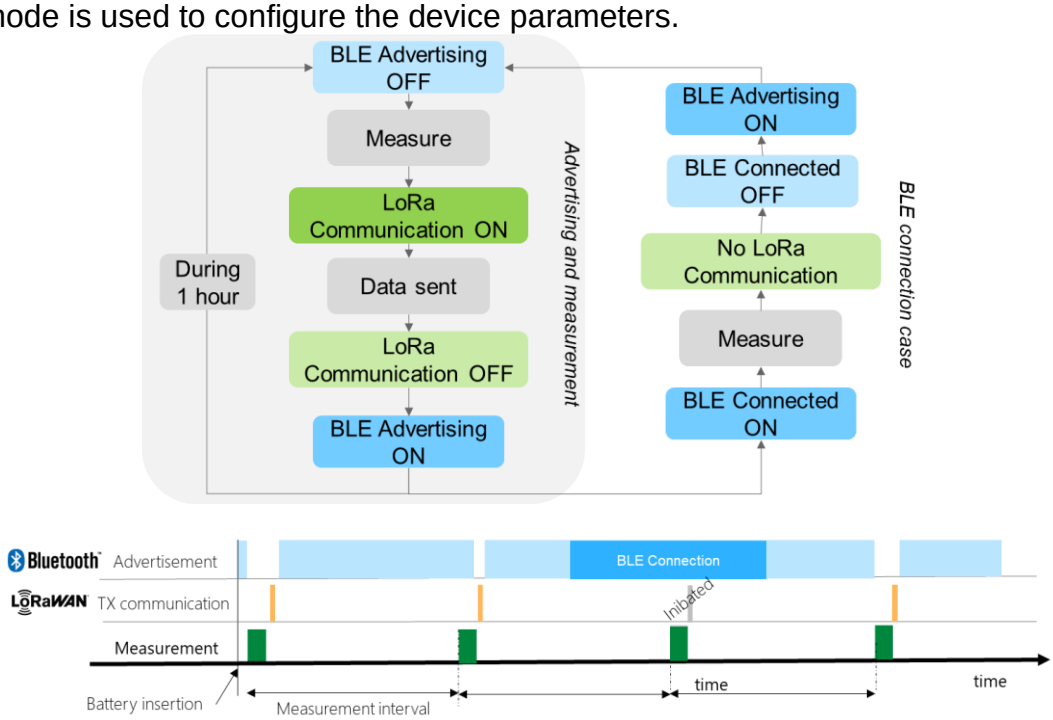

5.2.1.5 Special event: Magnet

If the user wants to make an asynchronous data acquisition, or access to BLE connected mode, he can use the magnet. The magnet event will trig a measurement, then the sensor will be in Preliminary Phase.

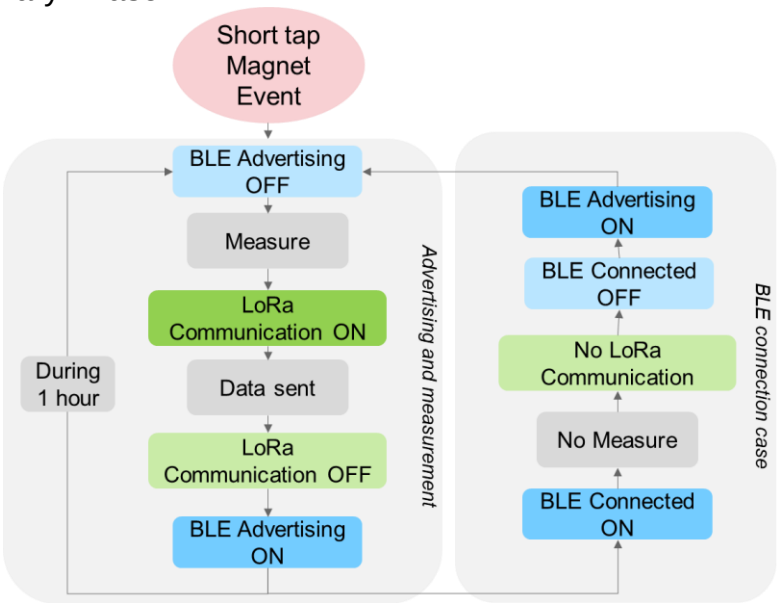

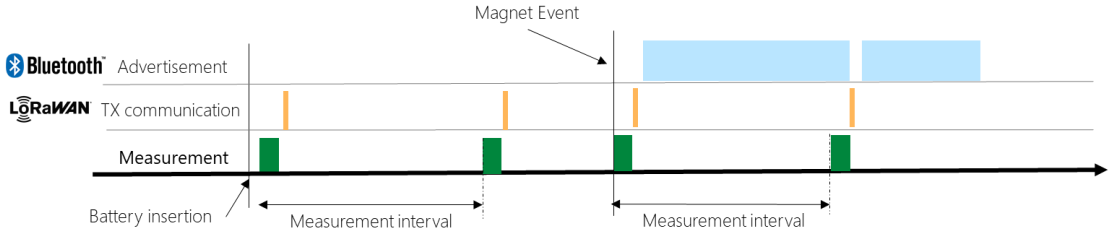

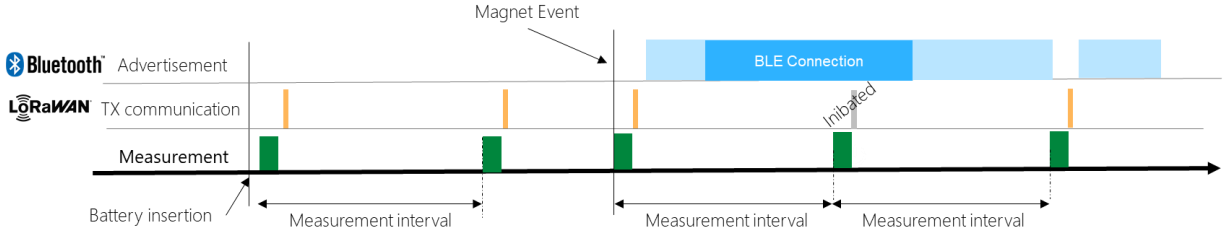

5.3 BLE COMMUNICATION

5.3.1.1 BLE Connected Mode

User can connect to the system with a Bluetooth device like computer, smartphone or tablet. It allows to configure, get access to special functions and update firmware. Product embeds with 3 different BLE connected modes which are listed below:

Operating mode	Description	Condition
Standard	User mode to configure the sensor and activate some specific function only available when connected	None
DFU	Mode used during FW update.	OTA update

5.3.1.2 Access to Connected mode

To get access to connected mode, the user should use a device with BLE feature. When an advertisement is sent by the system the user BLE device will have opportunities to connect.

5.3.1.3 Exiting from Connected mode

When in connected mode, there are way to disconnection:

- Use the disconnect software function on the BLE central device
- Use the magnet to disconnect.

5.3.1.4 DFU Mode: Device Firmware Update

DFU mode should be used to upgrade the sensor firmware. It is accessible from the standard mode.

The new firmware to be loaded must be signed by TE.

The DFU works with a single bank only. This means that if the firmware update is interrupted (power cut off or BLE disconnection), the application firmware will be corrupted, and the sensor will stay in DFU mode. The user will have to re-try the upgrading process. Note that the DFU MAC address is the sensor MAC address +1.

5.3.1.5 List of services available

When a user is on BLE connected mode, he can access to a list of services. Each service include characteristics which allow user to configure the sensor.
Every service and characteristic share a common UUID. Only byte #3 and #4 (XXXX) differ from the identifier.

BLE UUID	B614XXXX-B14A-40A6-B63F-0166F7868E13
UUID Service key	XXXX

5.4 LORAWAN COMMUNICATION

5.4.1.1 General information

5.4.1.2 Frequency plans

The LoRaWAN communication protocol operates in an unlicensed radio spectrum. The part number must be selected to match with the region of operation and be in line with the local regulation.

Region	Frequency	Channel Plan	Common name
Europe (EU)	868 MHz	EU862-870	EU868
United State (US)	915 MHz	US902-928	US915

5.4.1.3 Data rates

Following the LoRaWAN specification, each data rate is a combination of one spreading factor and one bandwidth.

5.4.1.3.1 EU868

For European regions, the product supports data rate from 0 up to 7 in both uplink and downlink ways.

Data Rate (DR)	Spreading Factor (SF)	Bandwidth (BW)	Bitrate (bit/s)

0	SF12	125 kHz	250
1	SF11	125 kHz	440
2	SF10	125 kHz	980
3	SF9	125 kHz	1 760
4	SF8	125 kHz	3 125
5	SF7	125 kHz	5 470
6	SF7	250 kHz	11 000

5.4.1.3.2 US915

For the US915, the data rate supported by the product are:

Direction	Data Rate (DR)	Spreading Factor (SF)	Bandwidth (BW)	Bitrate (bit/s)
Uplink	0	10	125	980
	1	9	125	1760
	2	8	125	3125
	3	7	125	5470
	4	8	500	12500
Downlink	8	12	500	980
	9	11	500	1760
	10	10	500	3900
	11	9	500	7000
	12	8	500	12500
	13	7	500	21900

5.4.1.4 TX power

RF transmitting systems must adhere to certain rules set by the regulatory bodies such as FCC or ETSI. Radio devices must not exceed certain ERP or EIRP values set by these regulatory bodies.

Depending of the regional parameter the product supports the following power.

5.4.1.4.1 EU868

TX Power	Power (dBm)	Power (mW)
0-1	+14 dBm	25
2	+12 dBm	16
3	+10 dBm	10
4	+8 dBm	6.3
5	+6 dBm	4
6	+4 dBm	2.5
7	+2 dBm	1.6

5.4.1.4.2 US915

TX Power	Power (dBm)	Power (mW)
0-8	+14 dBm	25
9	+12 dBm	16

10	+10 dBm	10

5.4.1.5 Time on air limitation

5.4.1.5.1 Duty cycle (EU868 only)

The European Telecommunications Standards Institute (ETSI) sets the maximum duty cycle for the EU868 at 1%, which is the maximum amount of time a device may spend communicating.
This means that in a day, a device should not transmit more than 864 seconds.

Example: <u>On measurement mode</u>
The table below show the effect of the data rate on the maximum number of uplink message which could be transmitted in a day. Assuming the payload size of the uplink message to be 11 bytes (see **Error! Reference source not found.**), it gives the following results:

Duty cycle limitation effect (EU868)							
DR	0	1	2	3	4	5	6
Number max of uplink per day	582	1165	2330	4662	8396	15265	30530
Minimum uplink interval	2min30	1min15	37s*	19s*	11s*	6s*	3s*

***the minimum configurable uplink interval is 1 min.**

5.4.1.5.2 Dwell time (US913 only)

There are no duty cycle limitations under Federal Communications Commission (FCC) but the device has to respect a certain limit of transmission duration. This parameter is called “Dwell time” and should not exceed 400ms per channel. Dwell time is the amount of time needed for a transmission.
This parameter is always respected by the product due to its compressed payload.
Note that in case of *FOptsLen*>3, the payload may be fragmented for DR0.

5.4.1.6 Mode of operation

Enrollment

To be recognized by the LoRaWAN server, the product must be enrolled on the final application server.
Use the LoRaWAN keys provided be TE Connectivity with the device.

Dev EUI	64-bit unique identifier of the end-device. Pre-provisioned by TE
App EUI	64-bit extended unique identifier. Provided by TE
App KEY	128-bit Pre-provisioned by TE Connectivity

Join and activation

After power on, the end-device performs a self-diagnostic then it initiates a join-request to the LoRaWAN™ network using Over-The-Air-Activation (OTAA).

5.4.1.6.1.1 Join accept

In case of a sufficient LoRaWAN™ coverage and if the device was already enrolled in the server database, the network server responds to the join-request with a join-accept message.

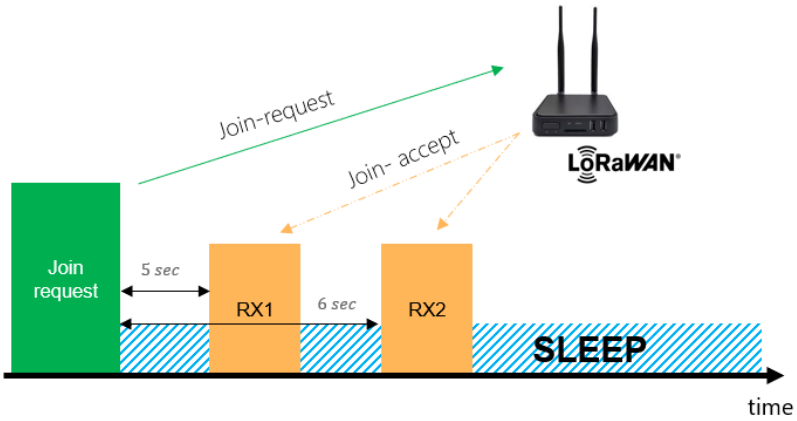

Figure 1:join accept

The possible reception windows delays are:

Window	Parameters	Delay
RX1	JOIN_ACCEPT_DELAY1	5s
RX2	JOIN_ACCEPT_DELAY2	6s

During that operation, the end-device shares with the server the sessions keys.

When a join request is accepted the system will send a keep alive.

5.4.1.6.1.2 Un-joined

If the LoRaWAN gateway is out of the product range, or if the end-devices is not enrolled on the network, the product won't receive any join accept response and will be in an un-joined state.
In that state, the system tries to re-join the network every 10 second and increases the join timer in case of failure by 20%, up to 1 hour maximum.
Note that for EU868 regions, the join-request may be sent only every 8 hours due to duty-cycle restriction.

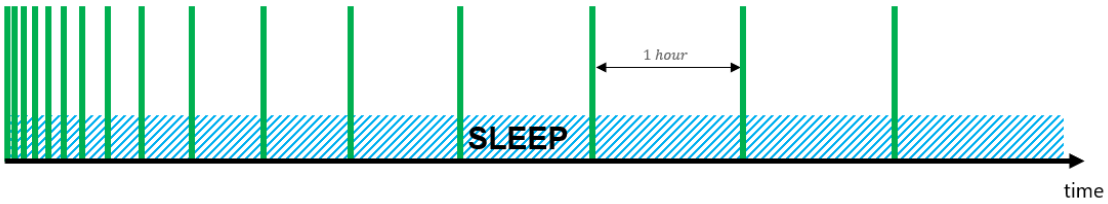

Figure 2: Rejoin procedure in case of failure

Normal mode

Once the product has joined the LoRaWAN network, it operates in normal mode.

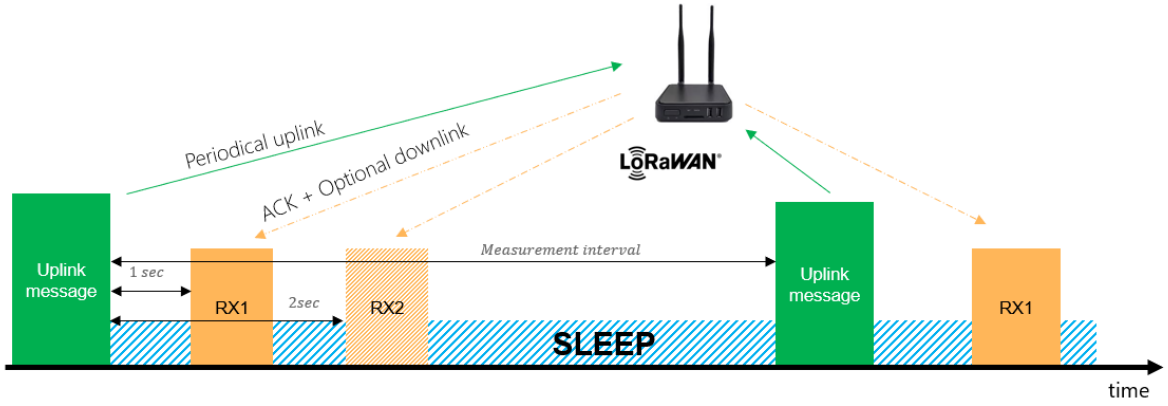

Figure 3 Normal mode of operation

5.4.1.6.1.3 Uplink message

Every measurement determined by the measurement interval or new threshold event will trigger an uplink message.
If the server does not send back the LoRaWAN ACK flag, the product increments an error counter. After 10 consecutive fails, it will try to re-join the network.

To ensure that the sensor is still alive a keep alive frame is sent. Interval between keep alive frame can be change by user. This frame is a dedicated frame (see 5.5.1.1.8).

5.4.1.6.1.4 Downlink message

Following each uplink transmission, the end-device (LoRaWAN Class A) opens one or two receive windows for potential downlink message. If no packet is destined for the product in RX1, the device does open the second receive window (RX2).
The possible reception windows delays are:

Window	Parameters	Delay
RX1	RECEIVE_DELAY1	1s
RX2	RECEIVE_DELAY2	2s

If the sensor is configured with LoRaWAN Event Mode, the system will receive configuration only when keep a live is sent.
This frame is a dedicated frame (see 5.5.1.1.9).
Keep alive frequency can be configure by user.

5.4.1.6.1.5 Message Priority

The measurement process has priority over sending. If a measurement must be done, the sending of frame over LoRaWAN is rescheduled 30 seconds later. Also, LoRaWAN

communication data rate (DR) depends on network quality et coverage. So, upon system location, LoRaWAN communication can have restriction. The system prioritizes or skips frame to be sent as following:

- When a downlink requests a response, while the response is not sent, the sending of keep alive or payload frame are skipped. Measurement data are stored into memory. The sending of downlink response is rescheduled 2 minutes 30 seconds later at each failed.
- When a Keep Alive occurs, while the keep alive is not sent and no response from downlink is waiting, the sending of payload frame is skipped. Measurement data are stored into memory. The sending of keep alive is rescheduled 2 minutes 30 seconds later at each failed.
- When the sending of a payload frame is failed, the sending is skipped and not rescheduled. Measurement data are stored into memory.

5.5 PAYLOAD DESCRIPTION

5.5.1.1 Specific BLE Frame format

5.5.1.2 Keep alive [Not implemented]

5.5.1.3 BLE Generic Advertising message format

This advertising is sent during phase 1. When using a BLE only system this frame will be sent to external system.

ADVERTISEMENT GENERIC																		
byte	0	1	2	3	4	5	6	7	8	9	10	11	12	13	14	15	16	17
field	CI		DEVTYPE		CUSTOM ADVERTISING DATA				CNT		DEV STAT	BATT	TEMP		SENSOR32			

- CI: Company identifier, 0x08DE.
- DEVTYPE: Information about the product (see 5.5.1.10)
- CUSTOM ADV DATA: 4-byte array
- CNT: measurement counter
- DEVSTAT: System global status (see 5.5.1.9)
- BATT: Battery level (see 5.5.1.11)
- TEMP: Secondary data from sensor 2-Byte. Note for Temperature generic sensor temperature will be platform internal temperature.
- SENSOR32: Main data from the sensor 4-Byte (Humidity) SENSOR32 data type is defined by DEVTYPE output field.

5.5.1.4 Specific LoRaWAN Frame format

5.5.1.5 Uplink message (Platform -> Gateway)

5.5.1.5.1 Keep alive

LoRaWAN Keep Alive (fport30 + confirmed flag)						
byte	*0*	*1*	*2*	*3*	*4*	*5*
field	*DEVTYPE*		*CNT*		*DEV STAT*	*BATT*

- DEVTYPE: Information about the product (see 5.5.1.10)
- CNT: measurement counter
- DEVSTAT: System global status (see 5.5.1.9)
- BATT: Battery level (see 5.5.1.11)

5.5.1.5.2 Nominal Data uplink

The uplink “sensor data” message follows the standard format.

LoRaWAN Nominal Uplink format (fport:10 + confirmed flag depending on % of acknowledge)												
byte	0	1	2	3	4	5	6	7	8	9	10	11
field	DEVTYPE		CNT		DEV STAT	BATT	TEMP16		SENSOR32			

- DEVTYPE: Information about the product (see 5.5.1.10)
- CNT: measurement counter
- DEVSTAT: System global status (see 5.5.1.9)
- BATT: Battery level (see 5.5.1.11)
- TEMP: Secondary data from sensor 2-Byte. Note for Temperature generic sensor temperature will be platform internal temperature.
- SENSOR32: Main data from the sensor 4-Byte (Humidity)
  SENSOR32 data type is defined by DEVTYPE output field.

5.5.1.5.3 Uplink Information Response frame

LoRaWAN Information Response Uplink format (fport:20)												
byte	0	1	2	3	…							n
field	OPERATION RESPONSE	UUID		PAYLOAD								

- RESPONSE: Context about response from the system.

Note: <u>*(Only for software version upper 3.3.X)*</u> After a Read (0x00) or Write+Read(0x02) request, the sensor automatically sends a Response (fPort 20) as soon as possible (directly in US915 or when Duty Cycle limitation elapsed in EU868).
Also, the sensor sends a responses (fPort 20) if a error is detected when a Write (0x01) is performed. This should not impact the Periodical Uplink messages.

OPERATION RESPONSE								
byte	0							
bit	7	6	5	4	3	2	1	0
field	UUID_UNK	OPERATION_ERR	READ_ONLY	NET_ERR	PERIOD_SKIP		OPERATION	

- UUID_UNK: set if characteristic does not exist
- OPERATION_ERR: set if invalid payload or configuration
- READ_ONLY: set if not able to write because field is read only
- NET_ERR: set if partial response sent (check DR vs payload max)
- PERIOD_SKIP: If conflict with Periodic msg, system inform network it prioritize operation frame. Measurement is store but not send.
- OPERATION

Read/Write	Value
Read	0
Write + Read of last data written Note: Read the value from the register even if the write fails.	2

- UUID: Service ID to identify the service answer.
  Note1: UUID for LoRaWAN operation request and response are UUID characteristic.
- PAYLOAD: Information form the service

5.5.1.6 Downlink message (Gateway -> Platform)

The downlink frame formats are defined as below

5.5.1.6.1 Information and configuration Request downlink

LoRaWAN Write or Write/Read Request Downlink format (fport:20)												
byte	0	1	2	3	…							n
field	OPERATION REQUEST	UUID		PAYLOAD								

Frame format for Write or Write/Read request

LoRaWAN Read Request Downlink format (fport:20)			
byte	0	1	2

field	OPERATION REQUEST	UUID

Frame format for write request

- OPERATION REQUEST: Define if user want to read, write or write with system acknowledge a data

OPERATION REQUEST								
byte	0							
bit	7	6	5	4	3	2	1	0
field					Fragmented data		OPERATION	

OPERATION	Value	Comment
Read	0	Read a configuration/data over LoRaWAN *Note: Read function is not available for Threshold and Datalog. To read Threshold or Datalog user should use Write/Read operation frame with Threshold or Datalog read function.*
Write	1	Write a configuration/data over LoRaWAN. *Note1: If the configuration is Read Only the system will send back an operation error* *Note2: Read function is not available for Threshold and Datalog. To read Threshold or Datalog user should use Write/Read operation frame with Threshold or Datalog read function.*
Write + Read of last data written	2	Write a configuration/data over LoRaWAN and then the system will read and send the value store into configuration. If a write error occurs value read will be the same as before.

- UUID: Service ID to identify the service answer
  Note1: UUID for LoRaWAN operation request and response are UUID characteristic.
- PAYLOAD: Information form the service. Payload is empty is a read is asked.

5.5.1.7 GENERIC PAYLOAD FORMAT

5.5.1.8 Global overview of payload available depending on communication

Function	Service Address	Information	Characteristic Address UUID to use for LoRaWAN communication	Payload size (Bytes)	BLE	LoRaWAN
Generic access	1800	Device Name	2A00	25	Connected: R	/
		Appearance	2A01	2	Connected: R	/
		Peripheral Preferred Connection Parameters	2A04	8	Connected: R	/
		Central Address Resolution	2AA6	1	Connected: R	/
Generic Attribute	1801	Service Change	2A05	0	Connected: R	/
Device information	180A	Model Number	2A24	6	Connected: R	Operation Msg: R
		Serial Number	2A25	13	Connected: R	Operation Msg: R
		Firmware revision	2A26	23	Connected: R	Operation Msg: R
		Hardware revision	2A27	7	Connected: R	Operation Msg: R
		Manufacturer	2A29	9	Connected: R	Operation Msg: R
Device	FC00	Device status	FC01	1	Connected: R/N Advertising: R	Periodic Uplink Keep Alive Msg
Battery	180F	Battery level	2A19	1	Connected: R/W Advertising: R	Periodic Uplink Keep Alive Msg Operation Msg: R/W/W+R
Bluetooth	CD00	Customer Specific Data	CD01	4	Connected: R/W Advertising: R	/
		BLE Adv Mode Configuration	CD02	1	Connected: R/W	Operation Msg: R/W/W+R
		Change Device Name	CD03	25	Connected: R/W ScanResp: R	/
Environmental sensing	181A	Internal platform temperature	2A6E	2	Connected: R/N	Operation Msg: R
Keep Alive	CE00	Keep Alive configuration	CE01	1	Connected: R/W	Operation Msg: R/W/W+R
Data collection	B300	Measurement Counter	B301	2	Connected: R/W/N Advertising: R	Periodic Uplink Keep Alive Msg Operation Msg: R
		Measurement interval	B302	3	Connected: R/W	Operation Msg: R/W/W+R
		Trig measurement	B303	1	Connected: W	Operation Msg: W/W+R
Last data from sensor	DA00	Last data acquired	DA01	6	Connected: R/N Advertising: R	Periodic Uplink Operation Msg: R
Live Mode	B400	Live Measurement interval	B401	1	Connected: R	/
		Live mode configuration	B402	1	Connected: R/W	/
Threshold	B200	Threshold	B201	5	Connected: R/W/N	Operation Msg: W/W+R
Datalog Raw value	DB00	Datalog data	DB01	/	Connected: R/W/N	Operation Msg: W/W+R
LoRaWAN	F800	LoRaWAN Mode Configuration	F810	1	Connected: R/W	Operation Msg: R/W/W+R
		DevEUI	F801	8	Connected: R	Operation Msg: R
		AppEUI	F802	8	Connected: R	Operation Msg: R
		Region	F803	1	Connected: R	Operation Msg: R
		NetID	F804	4	Connected: R	Operation Msg: R
		Status (Reserved)	F805		Connected: R	Operation Msg: R
		Percentage of confirmed uplink	F806	1	Connected: R/W	Operation Msg: R/W/W+R
DFU	FE59	OTA process	-	/		
Engineering	DD00	Reserved	DD01	/	Connected: R/W	/

Note: Two BLE generics services are embedded into the sensor:

- GENERIC ATTRIBUTE

- GENERIC ACCESS

They are mandatory for BLE use.

Note1: UUID for LoRaWAN operation request and response are UUID characteristic.

Note2: All bytes into a frame are code in BigEndian when use into a TE custom services
All bytes into a frame are code in LittleEndian when linked with BLE standard
When specific code is implemented, a note is added into description.

Note3: All bits into a byte are code in BigEndian

Note4: Serial Number is the BLE MAC Address

5.5.1.9 Device status

DEVICE STATUS								
byte	0							
bit	7	6	5	4	3	2	1	0
field	SENSOR	CONFIG.	MISC	CONDITION	SYSTEM PHASE			

- **SENSOR**: Open Circuit, Short Circuit, No Communication, Calibration corruption (CRC), Out of range reading
- **CONFIGURATION**: Wrong parameter (unproper config), Conflicting configuration, User configuration corruption (CRC)
- **MISC**: Self diag fails (memory access, ref reading …), No Network coverage, fail to join network
- **CONDITION**: Threshold trig
- **SYSTEM PHASE**:

System Phase	Value
Preliminary (LoRaWAN and BLE (ex:1rst hours))	1
Nominal (LoRaWAN or BLE only MODE)	0

5.5.1.10 Device Type

DEVTYPE: Information about the product

DT VALUE																
Bit	15	14	13	12	11	10	9	8	7	6	5	4	3	2	1	0
	SW Platform				Sensor				Wireless				Output Type SENSOR32			
	0	Error			0	Error			0	Error			0	Error		
	1	Platform_21			1	Vibration			1	BLE			1	Float		
					2	Temperature			2	BLE / LoRaWAN			2	Integer		
					3	Pressure										
					4	Humidity										

Example for a pressure BLE only product will be:

DT Value	Description
0x1311	Pressure Generic BLE with a float data type

5.5.1.11 Battery

BATTERY								
bit	7	6	5	4	3	2	1	0
field	BATTERY8							

- **BATTERY8**: percentage of remaining battery. Writing 0xFF in this register will reset the battery algorithm to 100%. (0x00= 0% and 0x64= 100%)
  Any other value written here will be ignored.

5.5.1.12 Bluetooth

5.5.1.12.1 Customer specific data

CAD			
3	2	1	0
CAD			

- **CAD**: Custom Advertisement Data: 4Byte

5.5.1.12.2 BLE Adv Mode Configuration

ADV_CFG								
bit	7	6	5	4	3	2	1	0
field	ADV_MUTE						ADV_MODE	

- **ADV_MUTE**: when the external device is connected, the system stops the advertising till the next event or measurement if set. Flag is reset on next event.
- **ADV_MODE**:

Mode	Value	Description
ADV Burst + Periodic Mode	0	Advertisement 15 times every 1s after measurement then. every 10 sec
ADV On Measure Burst Mode	1	Advertisement 15 times every 1s only after a measurement.
ADV Silent Mode	2	No advertisement included even after measurement.

Note: On LoRaWAN device this service will be hidden during BLE discover.

5.5.1.12.3 Advertisement interval [Not Implemented]

5.5.1.12.4 Change Device Name

Change device name characteristic allows customer to change device name.

Device Name							
24	-	5	4	3	2	1	0
DEVICE NAME							

- **DEVICE NAME**: Device name when BLE scan: 25Byte

5.5.1.13 Internal platform temperature

INTERNAL_TEMPERATURE16																
Bit	15	14	13	12	11	10	9	8	7	6	5	4	3	2	1	0
field	INTERNAL_TEMPERATURE16															

- **INTERNAL_TEMPERATURE16** (signed): Internal temperature of the platform

$$TEMP_{^\circ C} = TEMP_{LSB} * 0.01$$

5.5.1.14 Keep Alive

Interval between two keep alive frame.

Keep Alive Configuration								
bit	7	6	5	4	3	2	1	0
field				Disable_Keep_Mode		Keep_Alive Interval		

- **Keep Alive Interval**

State	Value
Keep Alive every 24h	0
Keep Alive every 12h	1
Keep Alive every 8h	2
Keep Alive every 4h	3
Keep Alive every 2h	4

Note: Default value is 24 hours.

- **Keep_Alive_Mode**:

State	Value
Keep Alive Active and send every time	0
Keep Alive Active and not emitted if a data is sent between Two keep alive. Keep alive interval is reset when a frame is sent	1
Keep Alive Disable	2

Note: Default value is 0.
Note1: A Keep Alive is sent at every reboot or power up.

5.5.1.15 Data Collection

5.5.1.15.1 Measurement Counter

MEASUREMENT COUNTER (R/W)

Bit	15	14	13	12	11	10	9	8	7	6	5	4	3	2	1	0
field	CNT16															

- **CNT16**: Number of measurements done. When reach 0XFFFF it will restart to 0x0000. Write 0x0000 the counter is reset to 0x0000. Other value won't affect current counter.

5.5.1.15.2 Measurement interval

Interval between two measurements.

MEAS_INTERVAL			
Byte	0	1	2
field	HOUR8	MINUTE8	SECOND8

- **HOUR8**: Number of hours [0-255]
- **MINUTE8**: Number of minutes [0-255]
- **SECOND8**: Number of seconds [0-255]
- MEAS_INTERVAL = "HOUR8" & "MINUTE8" & "SECOND8"

Note: Default value is 10min. Minimum value is 1s. Value 0x000 (0h0min0s) is not consider
Note2: It's possible to write value only in minute (ex:120min). The system will automatically transform value into standard time representation (ex:120min => 2hours).
Note3: When measurement interval is modified by user, next new measurement will be done after new measurement interval. System won't wait to end current measurement interval.

5.5.1.15.3 Trig Measurement

When using a TRIG the system will send the data first over BLE and then LoRaWAN if the product is eligible.

TRIG MODE								
bit	7	6	5	4	3	2	1	0
field	DISCON							TRIG

- **TRIG**: trig a new measurement flow (read raw values, temperature, battery and process the data)

Trig	Value
Disable	0
Ask a new measurement	1

- **DISCON**: force BLE disconnection before measurement trig.

Trig	Value

Disable	0
BLE connected mode disconnection	1

Note1 : Only 0x81 and 0x01 are allowed.
Note2: The goal of this function is not do force a BLE disconnection.

5.5.1.16 Last data from sensor

Last data acquired from the sensor:

Last data						
Byte	0	1	2	3	4	5
field	TEMP16		SENSOR32			

In case of Humidity generic

- **TEMP16:** Temperature of the sensor

Sensor Type	TEMP16	Format/Unit
Temperature	T°C from MCU	Big Endian Signed 16bit 1LSB = 0.01°C
Pressure	T°C from IS405	
Humidity	T°C from HTU21	

- **SENSOR32** (signed): Data from the sensor

Sensor Type	SENSOR32	Format/Unit
Temperature	T°C from Tsys	Big Endian Signed 32bit 1LSB = 0.01°C
Pressure	Pressure from IS405	Big Endian Float 32bit
Humidity	Humidity from HTU21	Big Endian Signed 32bit 1LSB = 0.01%RH

5.5.1.17 Live mode

5.5.1.17.1 Measurement interval

This mode is only available over BLE.

LIVE_MODE_MEAS_INTERVAL								
bit	7	6	5	4	3	2	1	0

field	LIVE_MODE_MEAS_INTERVAL8

- **MEAS_LIVE_INTERVAL8**: Read Only Value in millisecond.

5.5.1.17.2 Live mode configuration

LIVE_MODE_CFG								
bit	7	6	5	4	3	2	1	0
field								ENABLE

- **ENABLE**: enable or disable Live mode.

Enable	Value
Disable	0
Enable	1

NOTE: Two way are available to stop "Live mode":
- BLE disconnection from the central device or with the magnet
- Send Live Mode disable into LIVE_MODE_CFG

5.5.1.18 Threshold

To ask threshold parameters use the following frame:

Request Threshold information		
byte	0	1
field	ID DATA	PARAM SEL

Sensor will answer with the following frame:

Answer after a Read requestion						
byte	0	1	2	3	4	5
field	ID DATA	PARAM SEL	DATA32			

To write threshold parameters:

Write Threshold Configuration						
byte	0	1	2	3	4	5
field	ID DATA	PARAM SEL	DATA32			

- **ID_DATA**: defines the source for threshold

Source		Value
Main Sensor raw value		0x0

Main Sensor Delta	*Temperature sensor (T) or pressure sensor (P) or humidity sensor (HR)*	0x1
Secondary Sensor Raw value	*Platform Temperature (T) or Temperature into sensor (HR and P)*	0x2
Secondary Sensor Delta		0x3
Error	ID_DATA not defined or threshold configuration error	0xFF

- **PARAM SEL:** Select parameters to be changed (more details below)

Value	
THS_CONFIG	0x0
THS_LEVEL	0x1
MEAS_INTERVAL	0x2
Communication_MODE	0x3

  - **PARAM SEL**=0x0 (Threshold configuration)

This command can be used with multiple parameters.

Data32 format:

THS_CONFIG																																		
Byte	3								2								1								0									
bit	7	6	5	4	3	2	1	0	7	6	5	4	3	2	1	0	7	6	5	4	3	2	1	0	7	6	5	4	3	2	1	0
field	EVT_FLAG	THRESHOLD ENABLE	CONDITION	AUTO_CLR	ACTION: MEAS INTERVAL	ACTION: ADV MODE BLE	ACTION: COMM MODE LoRa																											

- **EVT_FLAG:** Forcing this bit to 0 clears the event flag until next trig.

State	Value
No event detected	0
Threshold event detected	1

- **THRESHOLD ENABLE:** Enable threshold

State	Value
Disactivated	0

Threshold activated	1

- **CONDITION:** Define the threshold condition

Condition	Value
Data32 < Threshold Level	0
Data32 > Threshold Level	1

- **AUTO_CLR:** Auto clear once event condition:

State	Value
Keep flag even if the threshold is ended	0
Autoclear Flag after threshold end	1

- **ACTION: MEAS_INTERVAL:** Change Measurement Interval after the threshold level reached:

State	Value
Disable	0
Change measurement interval after threshold	1

- **ACTION: ADV MODE BLE:** Change Advertisement Mode after the threshold level reached

State	Value
Disable	0
Change ADV Mode BLE after threshold	1

- **ACTION: COMM MODE LoRaWAN:** Change LoRaWAN Communication Mode after the threshold level reached

State	Value
Disable	0
Change LoRaWAN communication Mode after threshold	1

- **PARAM SEL**=0x1 Data32 format: Threshold level

THS_LEVEL				
Byte	3	2	1	0
field	INT32 / FLOAT32			
	N/A		INT16	

Same data format as SENSOR32 /TEMP16
Default value: 0x0

- **PARAM SEL**=0x2 Data32 format: Measurement interval after a threshold

MEAS_INTERVAL				
Byte	3	2	1	0
field	HOUR8	MINUTE8	SECONDE8	0 (Not Use)

Note: Default value is 1min. Minimum value is 1s but user shouldn't use it. Value 0x000 (0h0min0s) is not consider

- **PARAM SEL**=0x3 Data32 format: Communication mode after a threshold

THS_COMM_MODE																																
Byte	3								2								1								0							
bit	7	6	5	4	3	2	1	0	7	6	5	4	3	2	1	0	7	6	5	4	3	2	1	0	7	6	5	4	3	2	1	0
field							BLE_ADV_MODE								LoRaWAN COMM MODE																	

- **BLE_ADV_MODE**:

Mode	Value	Description
Periodic mode	0	Advertisement 15 times after measurement then every 10 sec
On Measure mode	1	Advertisement only after a measurement (15 consecutives ADV)
ADV Silent mode	2	No advertisement included even after measurement.

- **LoRaWAN_COMM_MODE**:

Mode	Value	Description
LoRaWAN On Measurement Mode	0	Send a frame every measurement

5.5.1.19 Datalog

5.5.1.19.1 Datalog array access request

ARRAY ACCESS REQUEST				
byte	0	1	2	3
field	TYPE8	INDEX16		LENGTH8

- **TYPE8**: Data (0 = TEMPERATURE16, 1 = SENSOR32, 2 = TEMPERATURE16 + SENSOR32).

- **INDEX16**: start index from 0 up to 4095 for Raw data (MSB first).
  0=lastest data acquired, 4095= oldest data acquired
- **LENGTH8**: number of values to be read. Admissible range depends on TYPE8:
  - 1-120 for TYPE8=TEMPERATURE16
  - 1-60 for TYPE8=SENSOR32
  - 1-40 for TYPE8= TEMPERATURE16 + SENSOR32

  If the required length is larger than network capabilities, the frame will be filled with the max possible data. No data will be truncated.
  Over LoRa, if network does not allow to provide desired number of data, a Network_Error flag will be set into Operation Response field.

5.5.1.19.2 Datalog array access response with notification

ARRAY ACCESS RESPONSE									
byte	0	1	2	3			-	m-1	m
field	TYPE8	INDEX16		LENGTH8	VALUE_0			VALUE_n	

- **TYPE8**: Data (0 = TEMPERATURE16, 1 = SENSOR32, 2 = TEMP16 + SENSOR32).
- **INDEX16**: start index of the value
- **LENGTH8**: number of values has been <u>really</u> sent.
- **VALUE_n**: SENSOR32 or TEMP16 or SENSOR32 + TEMP16. For TEMP16 the 1rst Byte is filled of 0.

Note: In case of error, ARRAY ACCESS RESPONSE will be 0xFFFFFF00.

5.5.1.20 LoRaWAN platform

If the platform is BLE only this service is not loaded.

5.5.1.20.1 LoRaWAN Mode configuration

LoRaWAN TX Mode Config								
bit	7	6	5	4	3	2	1	0
field							LoRaWAN_COMM_MODE	

- **LoRaWAN Communication Mode**:

Mode	Value	Description

On Measurement Mode	0 (Default)	LoRaWAN Communication at every measurement
On Silent Mode	1	No LoRaWAN communication at each measurement

Note: CNT will be the latest measurement.
Note2: Uplink frame will have the same header, but sensor data will be added ones after others.

5.5.1.20.2 DevEUI

This number is the 64-bit Device Extended Unique Identifier of the sensor. It is generated by TE and must be derived from the TE Organizationally Unique Identifier (OUI) assigned from the IEEE Registration Authority.

5.5.1.20.3 AppEUI

This number is the 64-bit application Extended Unique Identifier of the sensor.

5.5.1.20.4 NET ID

Contains the operator network identifier coded on the 4-byte value (LSB first). The list of all possible operator is listed below.
https://www.thethingsnetwork.org/docs/LoRaWANwan/prefix-assignments/
For example, 0x00000013 identifies “The Things Network”.

5.5.1.20.5 Region

LoRaWAN configured region. US or EU.

5.5.1.20.6 Status

Reserved

5.5.1.20.7 LoRaWAN percentage of confirmed uplink messages

It is possible to reduce the number of acknowledgements between the LoRaWAN gateway and the device.

LORA_ACK_PER								
byte	0							
bit	7	6	5	4	3	2	1	0
field	PERCENTAGE = 100							

- PERCENTAGE: Percentage of LoRaWAN uplink confirmed messages. From 0% up to 100%. Default is 100%.

Note: Value 0% should not be used by end user.
Note1: LoRaWAN percentage of confirmed uplink is only applied on Nominal d (Keep alive frame are confirmed) data uplink

6 BATTERY

6.1 SAFT LS17330

The system should be exclusively powered with an LS17330 battery.

Parameters	Typical value
Manufacturer	SAFT
Reference	LS 17330
Technology	Primary lithium-thionyl chloride (Li-SOCl2)
Nominal voltage	3.6 V
Capacity at 20°C	2100 mA
Operating temperature range	- 60°C/+ 85°C

6.2 BATTERY LIFE

Depending on customer settings (measurement interval) battery life could go up to 4 years (depends on measurement interval and RF communication).
The number of measurements per day will affect the battery life. More measurements will reduce the battery life.

6.3 BATTERY REPLACEMENT

The 5X11N's battery must be replaced if depleted.

Remove the plastic cover following the opening direction, using the orange ribbon to pull out the battery, put the orange ribbon back to the cavity before install the new battery. Note that it MUST be replaced by the same battery reference 3.6 V SAFT battery LS17330. Put the spacer on negative terminal and install the battery positive upward, pull the spacer out and then, Install the plastic cover and tighten it following the locking direction. Refer to the Installation Manual for specific details regarding battery installation and replacement.

N.B.: It is only allowed to replace the battery in non-hazardous areas.

Once done, the user must have to use the BLE "battery" characteristic value to reset the battery estimation algorithm. Diag_Battery_Change flag will be reset to 0 only when Battery change service is used by user.

<u>!This action is mandatory otherwise battery level will stay at 0%!</u>

7 MAGNETIC SWITCH

The system has an internal reed switch.
This switch is activated when a strong magnet is close to the magnetic sensor location.
The magnetic switch location is indicated by the magnet icon on the plastic cover. The magnet must be of sufficient strength and proximity to create a magnetic field of 25 mT at the switch location.

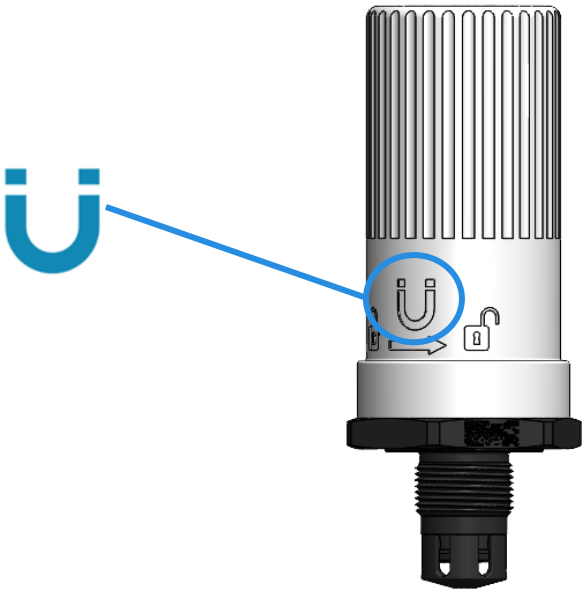

Two different functions are available depending on the user action:

Function	User action	LED
Activates BLE for another one hour Trigs a new measurement and a LoRaWAN™ transmission (uplink if joined, else join request Disconnect from BLE connected mode	Short tap	One short blink. If user holds the magnet close to the switch for a longer duration, the LED will blink faster. Remove the magnet to only initiate a transmission. Else it going to initiate a sensor reset.
Restart the sensor and keep current configuration	Hold the magnet for 10 seconds.	Wait for at least 10 seconds, to see the very fast blink. Release the magnet once a very long orange led appears

8 LED

A yellow led is used to indicate user some specific event:

		Led Behavior
Battery insertion		ON during 2s
Magnet event		ON during 200ms
Maintaining Magnet	<3s	Slow blinking
	[3s-10s]	Fast blinking
	>10s	OFF -> reboot

9 DIMENSIONS

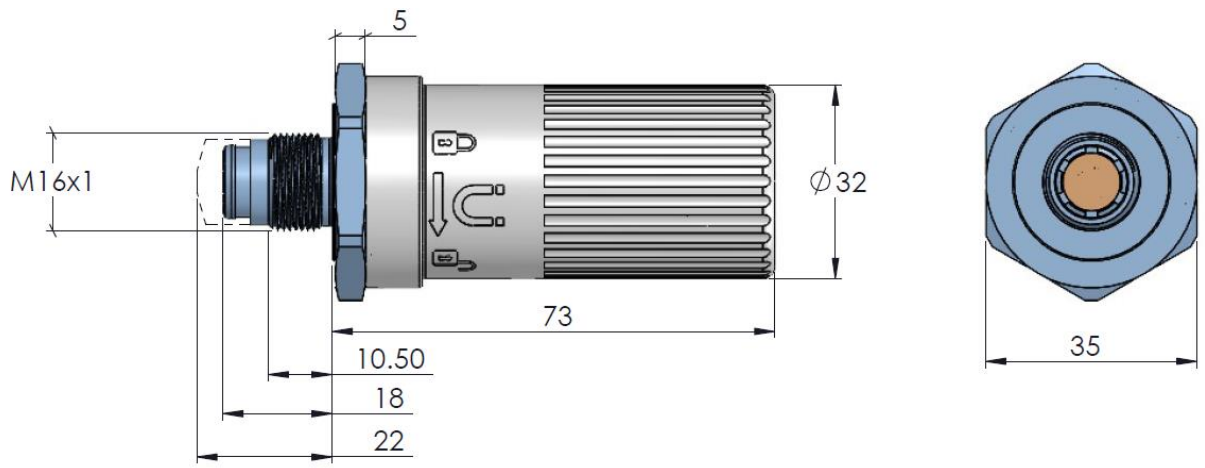

10 MOUNTING CONSIDERATIONS

The humidity sensor should be stud mounted on a clean, flat surface. The mounting torque for the sensor is not exceed 10 N-m.

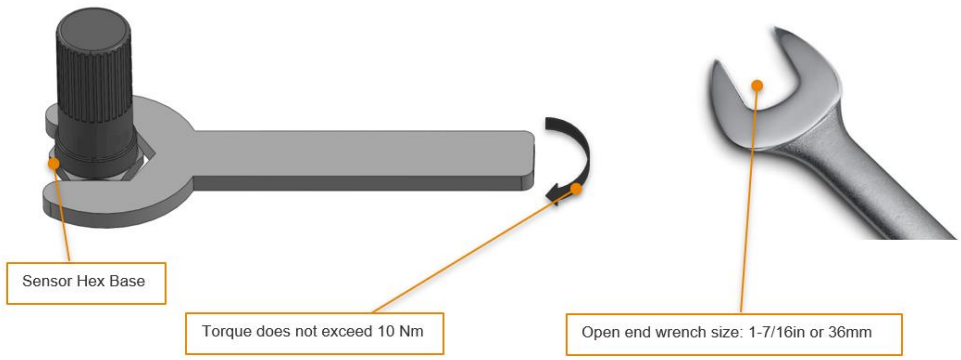

WARNING – Do NOT tighten the sensor by twisting on the cover. Damage to the sensor WILL occur. Tighten to the correct torque using a wrench on the hex base.

WARNING – Install in a process connection with enough room to allow the use of Spanner/Wrench.

WARNING – To reduce the risk of burns or frost bite, wear protective personal equipment when installing or removing from high or below-freezing temperature process or environments.

WARNING – After installation carefully check for leaks.

11 CERTIFICATIONS & COMPLIANCES

5911N Wireless Sensors with characteristic (EX) in model name are certified for Intrinsic Safety to the following classification:

IS Class I, Div1, Groups A, B, C, D and T4;
Class I Zone 0, AEx ia IIC T4 Ga;
Ex ia IIC T4 Ga;
II 1 G Ex ia IIC T4 Ga

Please see section 14 for details on how to order.

12 REGLUATORY STATEMENTS

FCC and IC

This Radio Equipment is Certified for FCC (US) and ISED (Canada).

This equipment does not support simultaneous transmissions.

Changes or modifications not expressly approved or authorized by TE Connectivity for compliance could void the user's authority to operate the equipment.

FCC Warning:

THIS DEVICE COMPLIES WITH PART 15 OF THE FCC RULES.OPERATION IS SUBJECT TO THE FOLLOWING TWO CONDITIONS: (1) THIS DEVICE MAY NOT CAUSE HARMFUL INTERFERENCE, AND (2) THIS DEVICE MUST ACCEPT ANY INTERFERENCE RECEIVED, INCLUDING INTERFERENCE THAT MAY CAUSE UNDESIRED OPERATION.

Note: This equipment has been tested and found to comply with the limits for a Class B digital device, pursuant to Part 15 of the FCC Rules. These limits are designed to provide reasonable protection against harmful interference in a residential installation. This equipment generates, uses, and can radiate radio frequency energy and, if not installed and used in accordance with the instructions, may cause harmful interference to radio communications. However, there is no guarantee that interference will not occur in a particular installation. If this equipment does not cause harmful interference to radio or television reception, which can be determined by turning the equipment off and on, the user is encouraged to correct the interference by one or more of the following measures:

- Re-orient or relocate the receiving antenna
- Increase the separation between the equipment and the receiver

▪ Connect the equipment to an outlet on a circuit that is different from that to which the receiver is connected.

▪ Consult the dealer or an experienced radio/TV technician for help.

Industry Canada (IC) Warning:

This device complies with ISED Canada licence-exempt RSS standard(s). Operation is subject to the following two conditions: (1) this device may not cause interference, and (2) this device must accept any interference, including interference that may cause undesired operation of the device.

Le présent appareil est conforme aux CNR d'ISED Canada applicables aux appareils radio exempts de licence. L'exploitation est autorisée aux deux conditions suivantes : (1) l'appareil ne doit pas produire de brouillage, et (2) l'appareil doit accepter tout brouillage radioélectrique subi, même si le brouillage est susceptible d'en compromettre le fonctionnement.

IMPORTANT NOTE:

Radiation Exposure Statement: This equipment complies with radiation exposure limits set forth for an uncontrolled environment. End users must follow the specific operating instructions for satisfying RF exposure compliance. To maintain compliance with RF exposure compliance requirement, please follow operation instruction as documented in this manual.

Déclaration d'exposition aux radiations

Cet équipement est conforme aux limites canadiennes d'exposition aux radiations dans un environnement non contrôlé. Cet équipement doit être installé et utilisé avec une distance minimale de 20 cm entre le radiateur et votre corps.

The antenna must be installed such that a minimum separation distance of 20cm is maintained between the radiator (antenna) and all persons at all times. The transmitter module must not be co-located or operating in conjunction with any other antenna or transmitter.

13 EU CONFORMITY

The products below were tested by approved agencies and found compliant with EU regulatory standards.

Model Families: 5911N

Product Description: Wireless Humidity Sensor

Manufacture/Brand: TE Connectivity Ltd

Manufacturer:

Measurement Specialties (China) LTD

No 26 LangShan Road
518057 Shenzhen-Nanshan District, China

European Contact:
TE Connectivity Sensors France
4 Rue Gaye Marie
31027 Toulouse – France

OPERATING FREQUENCY (the maximum transmitted power)
2402MHz-2480MHz (EIRP 3.56)
863MHz~870MHz(EIRP 11.72 dBm)

14 ORDERING INFORMATION

LoRa + BLE Sensor Model Number

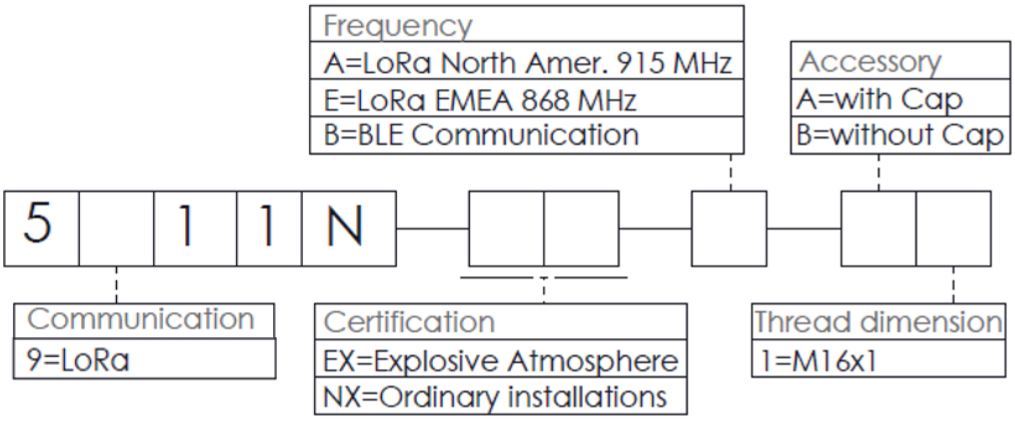

Sales and technical support

NORTH AMERICA

Measurement Specialties, Inc.,
a TE Connectivity Company
Phone: +1 800-745-8008
Email: TEsensors-CCMeas@te.com

EUROPE

Measurement Specialties (Europe), Ltd.,
a TE Connectivity Company
Phone: +31 73 624 6999
Email: customercare.lcsb@te.com

ASIA

Measurement Specialties (China), Ltd.,
a TE Connectivity Company
Phone: +86 0400-820-6015
Email: customercare.shzn@te.com

Manufacturer: Measurement Specialties (China) Inc., a TE Connectivity Company
No. 26 Langshan Road, Shenzhen High-Tech Park (North), Nanshan District,Shenzhen, 518057
Tel: +86 0400-820-6015 customercare.shzn@te.com