MSWB2213
MoreSense WiFi & BLE Module
User Manual V1.2

Revision History

Revision	Description	Release Date
V1.0	MSWB2213 User Manual Initial Version	
V1.1	Revised The Dimension	2021-11-8
V1.2	Updated Internal And External Antennas	2021-12-3

Proprietary Statement:

Shenzhen MoreSense Technology Co., Ltd.

All Rights Reserved

Copyright © 2021 by MoreSense

Catalog

1 Product Description..... 1

2 System Block Diagram..... 2

3 Product Features..... 3

4 Key Application..... 4

5 Parameter for MSWB2213..... 4

6 Pin Definition..... 6

7 Module Dimension..... 9

8 Name Rules..... 9

9 Precautions..... 10

10 Hardware Typical Application..... 11

11 Package Information 12

11.1 Recommended Relow Soldering Profile..... 12

11.2 Instruction..... 13

11.3 MSWB2213 Package Method..... 13

1 Product Description

The module of MSMB2213 series is ultra low-powered and highly integrated modules that integrates 2.4GHz Wi-Fi and low-powered Bluetooth (Bluetooth®LE) dual-mode wireless communication.It has the following features:

▶ Complete Wi-Fi subsystem, in line with IEEE802.11b/g/n protocol,with Station mode,SoftAP mode,SoftAP+Station mode and Promiscuous mode(a special mode);

▶ Low-powered Bluetooth subsystem,supporting Bluetooth5 and Bluetoothmesh • leading low-powered performance and radio frequency performance in the industry;

▶ RISC-V 32-bit single-core processor,four-stage pipeline architecture,main frequency up to 160MHz • Built-in 400KB SRAM(in which 16KB dedicated to cache),384KBROM storage space,and supports multiple external SPI,Dual SPI,QuadSPI,QPI flash;

▶ Perfect security mechanism-hardware encryption accelerator supports AES-128/256,Hash,RSA, HMAC,digital signature and secure boot-integrated hardware random number generator-support;

▶ Abundant communication interfaces and GPIO pins,which can support a variety of scenarios and complex applications.

Physical Map

Built-in Antenna:

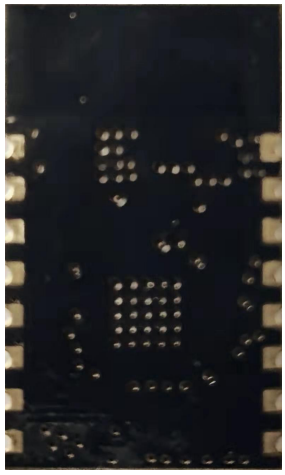

2 System Block Diagram

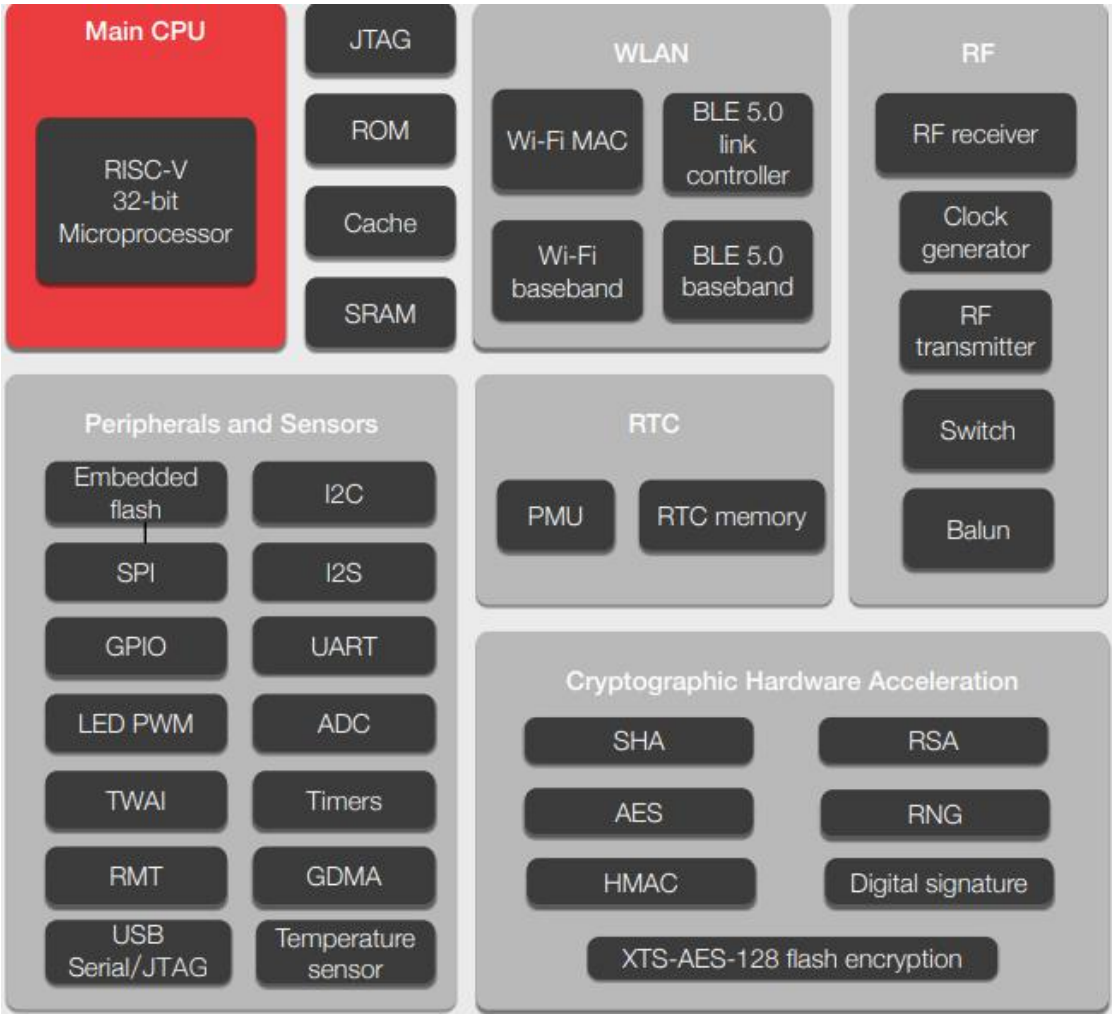

3 Product Features

- Support IEEE802.11b/g/n protocol;
- Support 20MHz and 40MHz bandwidth in 2.4GHz band;
- Support 1T1R mode,data rate up to 150Mbps;
- 4 x Virtual Wi-Fi Interfaces • Support infrastructure network (Infrastructure BSS)

Station mode,SoftAP mode,Station+SoftAP mode and promiscuous mode;

- Bluetooth Low Energy (BluetoothLE):Bluetooth5,Bluetoothmesh;
- The rate supports 125Kbps,500Kbps,1Mbps;
- Advertising Extensions;
- Multiple Advertisement Sets;
- Channel Selection Algorithm#2);
- 32-bit RISC-V single-core processor with a main frequency of up to 160MHz;
- 384KBROM;
- 400KBSRAM (in which 16KB is dedicated to cache);
- 8KBRTCSRAM;
- Embedded Flash 4M.

4 Key Application

• Security and Smart Surveillance:Cameras...

• Smart Home:smart lighting,smart buttons,smart sockets,indoor positioning

•Industrial Automation:industrial robots,Mesh networking,human-machine interface,industrial bus applications

• Healthcare:health monitoring,baby monitor

• Consumer Electronics:smart watches,smart bands – OTT TV boxes,set top box devices – Wi-Fi and Bluetooth speakers,toys with data upload and proximity sensing toys

•Smart Agriculture:smart greenhouse,smart irrigation,agricultural robots

• Retail Catering: POS systems,service robots,cloud printers

• Universal Low-powered IoT data logger

5 Parameter for MSWB2213

Type	Parameter	Value
WIFI Parameter	Certification Standards	FCC/CE/SRRC/RoHS
	Wireless Standards	802.11 b/g/n
	Frequency Range	2.412GHz-2.462GHz
	Transmit Power	802.11b: +16dBm(@11Mbps)
		802.11g: +14dBm(@54Mbps)
		802.11n: +13dBm(@HT20,MCS7)
	Receiver Sensitivity	802.11b: -87dBm (@11Mbps,CCK)
		802.11g: -87dBm (@54Mbps,OFDM)
		802.11n: -85dBm (@HT20,MCS7)
	Antenna	MSWB2213: Built-in: PCB antenna

Bluetooth Parameters	Wireless Protocol	BLE5.0
	Frequency Range	2.402GHz-2.480GHz
	Transmit Power	-1.5dbm
	Receiver Sensitivity	-90dBm
Hardware Parameters	Data Interface	UART
		GPIO,SPI
	Operating Voltage	3.0~3.6V
	Working Current	Peak(continuous transmission): 260mA Average (STA,connected and standby): 24mA (DTIM1) Average (STA,1KB/s): 54mA Average (AP): 85mA
	Operating Temperature	-40℃- 85℃
	Storage Temperature	-40℃- 125℃
	Humidity	<85%
	DIM.	MSWB2213： 22mm x 13.5mm x 3mm
Software	Wireless Network Type	STA/AP/AP+STA/BLE5.0
	Security Mechanism	WEP/WPA-PSK/WPA2-PSK
	Encryption Type	WEP64/WEP128/TKIP/AES

Parameters	Upgrade Firmware	Local Wireless Remote upgrade
	Customization Development	Provide SDK for customer's 2nd development
	Network Protocol	IPv4,TCP/UDP/HTTP/MQTT
	User Configuration	AT+ command set,Web page Android/iOS terminal Smart Link smart configuration APP

6 Pin Definition

Table.1 MSWB2213 Pin Function Definition

Pin	Name	Type	Description
1	IO4	I/O/T	GPIO4,if it does not use-NC
2	IO5	I/O/T	GPIO5,if it does not use-NC
3	IO6	I/O/T	GPIO6,if it does not use-NC
4	I07	I/O/T	GPIO7,if it does not use-NC
5	UART0	O	3.3V Communication Serial Port 0 Output GPIO18
6	UART0	I	3.3V Communication Serial Port 0 Input GPIO19
7	UART0_CTS	I/O/T	GPIO8,if it does not use-NC can do PWM0 function
8	UART0_RTS	I/O/T	GPIO9,if it does not use-NC can do PWM1 function
9	IO2	I/O	GPIO2,ADC function
10	Module Reset	I	Low active hardware reset input pin,there has internal reset circuit,external pull-up resistance is not allowed,avoiding prolong the reset time and cause abnormal startup.
11	Module Startup Instructions (can be configured as GPIO3)	I/O/T	"0" - complete startup; "1" - do not complete startup; if it does not use-NC GPIO3,can do PWM2 function

12	Restore Default Configuration(can be configured as GPIO10)	I/O/T	GPIO10,can do PWM3 function
13	IO20	I/O/T	Debug_RX GPIO20
14	1021	I/O/T	Debug_TX GPIO21
15	+3.3V Power Supply	Power	
16	Ground	Power	

I:Input O:Out T:It can be set as high impedance.

7 Module Dimension

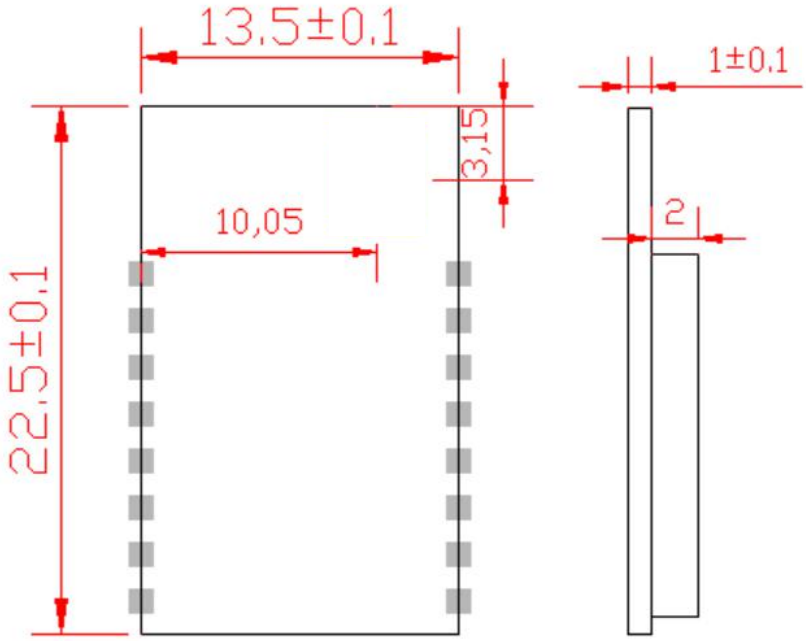

Unit: Millimeter (mm)

8 Name Rules

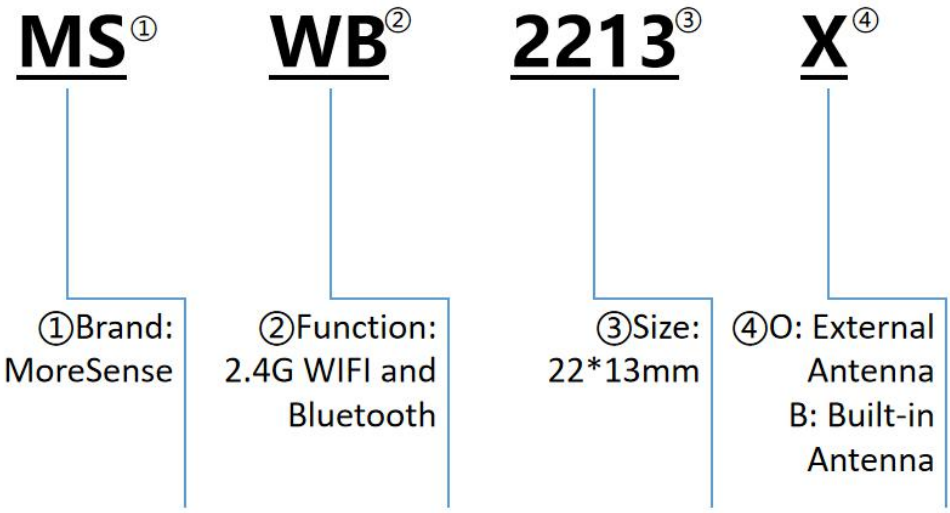

9 Precautions

Precautions

MSMB2213 supports built-in antenna option.When customers chooses built-in antennas,they need to observe the following precautions for built-in antennas and general rules for modules placement:

• On the user's PCB board,the area corresponding to the strip area (MSWB2213:22.5x13.5mm) in the picture above cannot place components and lay GND;

• The antenna should be kept away from metal at least 10mm away from the surrounding high components;

• The antenna part cannot be blocked by the metal casing,and the plastic casing needs to be at least 10 mm away from the antenna;

• MoreSense recommends that the MSWB2213 module be placed in the following areas of the user board,which aimed to reducing the impact on the antenna and wireless signals.At the same time, please ask MoreSense for technical support to assist in the placement of the module and the layout design of related areas.

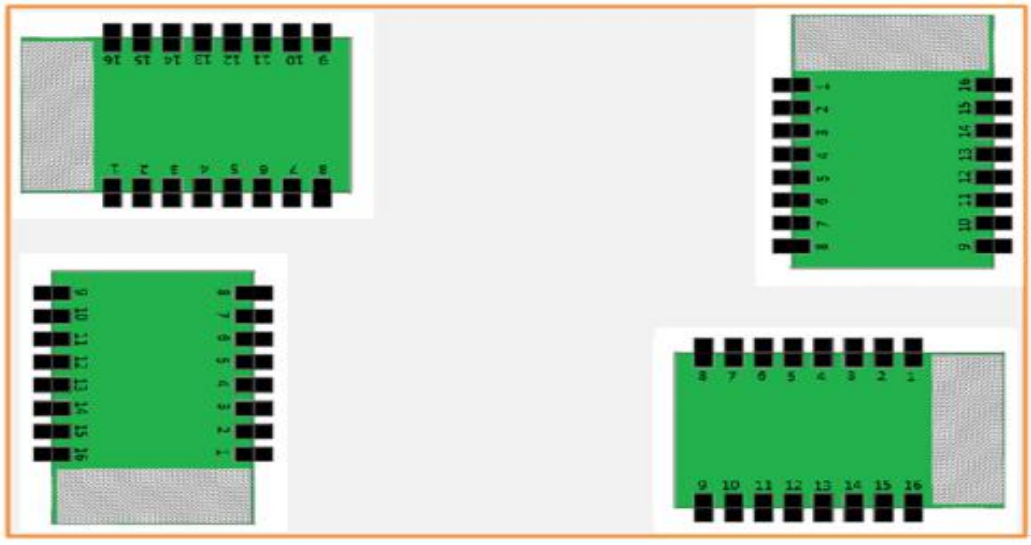

10 Hardware Typical Application

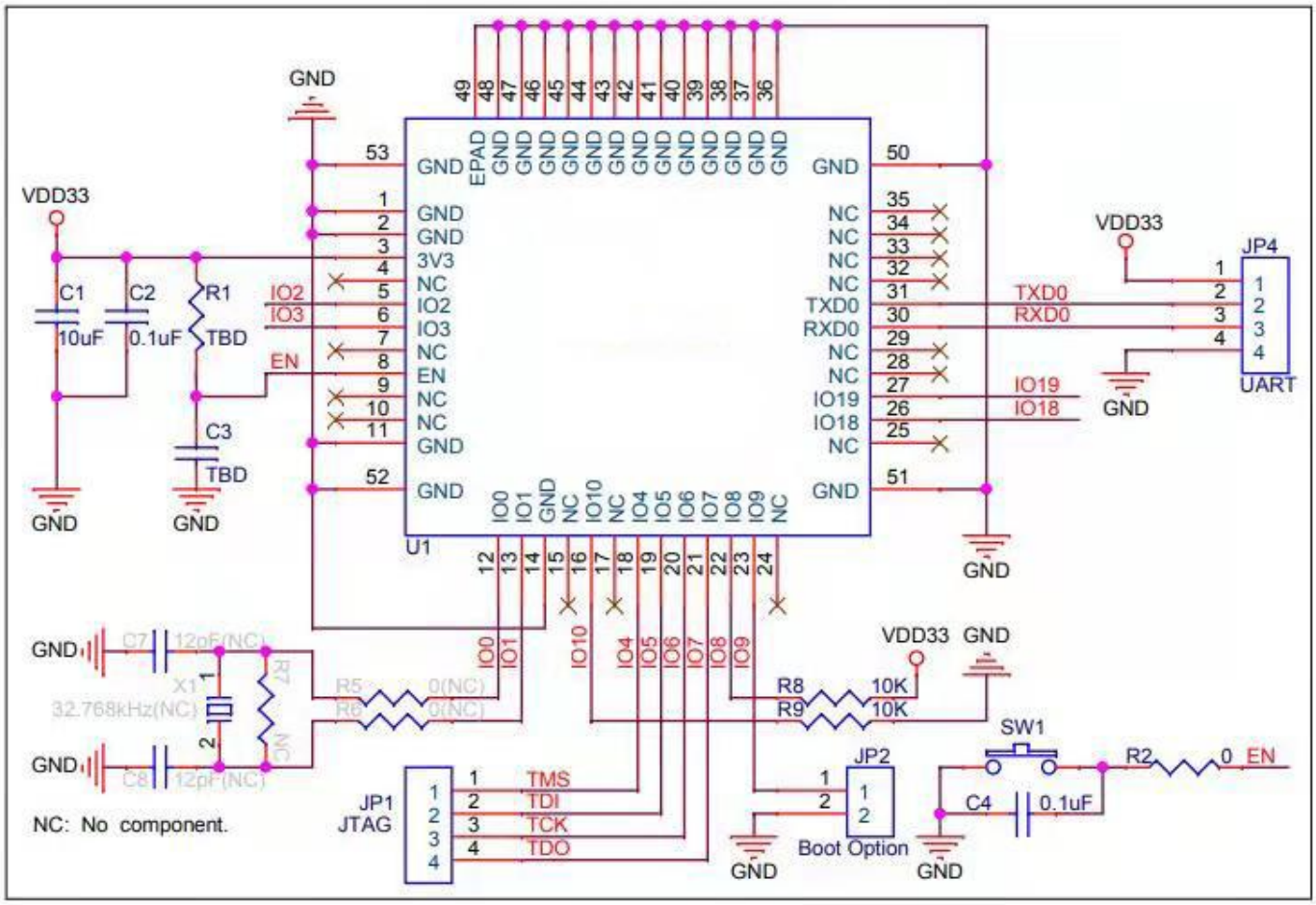

11 Package Information

11.1 Recommended Reflow Soldering Profile

Figure 1.Thermal Reflow Profile

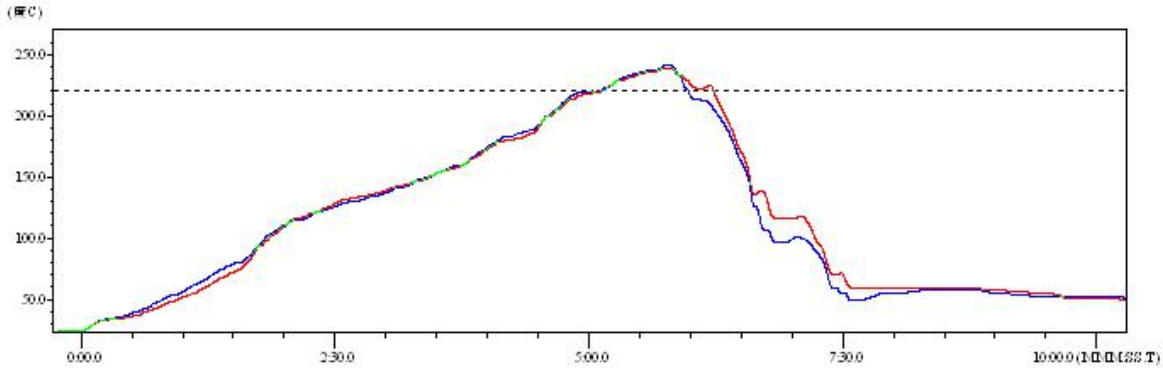

Table 1.Reflow Data

No.	Program	Temp. (°C)	Time(S)
1	Re-fluxing Time	Above 220°C	35~55S
2	Peak Temp.	Highest 260°C	

Note： :

1.It is recommended to use a nitrogen re-flux furnace;
2.The oxygen content is less than 300ppm.

11.2 Instruction

A. Sealed storage period:12 months in an environment with a temperature of less than 30°C and a relative humidity of less than 60%.

B.Be re-baked before using if the window time exceeds 168 hours after unpacking.

C. Recommended to use nitrogen filling method for baking.

D. Recommended to use nitrogen filling method.

E, Baking and rework requirements for this model:125±5℃, 24 hours.

F. Recommended storage conditions ≦10%,relative humidity under vacuum packaging.

G.If the SMT process requires to pass twice reflow ovens:

① TOP Surface② BOT Surface

Situation 1:The WIFI module is designed on the TOP surface of the customer's PCB.The the TOP surface needs to be baked when the TOP surface has not been produced after the BOT surface has been finished 168 hours (window time).

Situation 2;The WIFI module is designed on the BOT side of the customer's PCB and follows the normal baking rules.

Note:The window time means 168 hours from the end of the last baking to the beginning of the next reflow.

11.3 MSWB2213X Package Method

Reel Packaging

Dim.:340*340*50 mm

12 FCC WARNING

This device complies with part 15 of the FCC Rules. Operation is subject to the following two conditions:

Any changes or modifications not expressly approved by the party responsible for compliance could void the user's authority to operate the equipment.

NOTE: This equipment has been tested and found to comply with the limits for a Class B digital device, pursuant to Part 15 of the FCC Rules. These limits are designed to provide reasonable protection against harmful interference in a residential installation. This equipment generate, uses and can radiate radio frequency energy and, if not installed and used in accordance with the instructions, may cause harmful interference to radio communications. However, there is no guarantee that interference will not occur in a particular installation. If this equipment does cause harmful interference to radio or television reception, which can be determined by turning the equipment off and on, the user is encouraged to try to correct the interference by one or more of the following measures:

-- Reorient or relocate the receiving antenna.

-- Increase the separation between the equipment and receiver.

-- Connect the equipment into an outlet on a circuit different from that to which the receiver is connected.

-- Consult the dealer or an experienced radio/TV technician for help.

This device complies with part 15 of the FCC Rules. Operation is subject to the condition that this device does not cause harmful interference

(1) this device may not cause harmful interference, and (2) this device must accept any interference received, including interference that may cause undesired operation.

instructions for host product manufacturers according to KDB 996369 D03 OEM Manual v01

2.2 List of applicable FCC rules

The MSWB2213 is an BT Module with GFSK modulation and WIFI Module with DSSS and OFDM. BT module operates on the 2402MHz~2480MHz band and WIFI Module operates on the 2412MHz~2462MHz.

FCC part 15.247 standard

2.3 Specific operational use conditions

The EUT is a BT/WIFI Module

BT/WIFI Antenna Type: PCB Antenna

BT/WIFI Antenna gain: 1.5dBi

The module can be used for mobile or applications with the maximum Ant 1.5dBi; The host manufacturer installing this module into their product must ensure that the final composit product complies with the FCC requirements by a technical assessment or evaluation to the FCC rules, including the transmitter operaition. The host manufacturer has to be aware not to provide information to the end user regarding how to install or remove this RF module in the user's manual of the end product which integrates this module. The end user manual shall include all required regulatory information/warning as show in this manual.

2.4 Limited module procedures

not applicable; Single Modular Approval Request

2.5 Trace antenna designs

Not applicable;

2.6 RF exposure considerations

To maintain compliance with FCC's RF Exposure guidelines, This equipment should be installed and operated with minimum distance between 20cm the radiator your body: Use only the supplied antenna.

2.7 Antennas

The MSWB2213 is an BT/WIFI Module beams signals and communicates with its antenna, which is PCB Antenna. The PCB Antenna gain is 1.5dBi. The module shall be only used with the internal antenna(s) that has been originally tested and certified with this module.The antenna must be either permanently attached or employ a 'unique' antenna coupler. As long as the conditions above are met, further transmitter test will not be required. However, the host manufacturer is still responsible for testing their end-product for any additional compliance requirements required with this module installed (for example, digital device emissions, PC peripheral requirements, etc.).

2.8 Label and complianceinformation

Host product manufacturers need to provide a physical or e-label stating "Contains FCC ID: 2A86J-MSWB2213"with their finished product.

2.9 Information on test modes and additional testingrequirements

Data transfer module demo board can control the EUT work in RF test mode at specified test channel.Additional testing, Part 15 Subpart B disclaimer.The module without unintentional-radiator digital circuit, so the module does not required an evaluation by FCC Part 15 Subpart B. The host should be evaluated by the FCC Subpart B.

2.10 Additional testing, Part 15 Subpart B disclaimer

The modular transmitter is only FCC authorized for FCC Part 15 Subpart C 15.247 & 15.207 & 15.209 and that the host product manufacturer is responsible for compliance to any other FCC rules that apply to the host not covered by the modular transmitter grant of certification. If the grantee markets their product as being Part 15 Subpart B compliant (when it also contains unintentional-radiator digital circuity), then the grantee shall provide a notice stating that the final host product still requires Part 15 Subpart B compliance testing with the modular transmitter installed.

ATTENTION

This device is intended only for OEM integrators under the following conditions:

1) The antenna must be installed such that 20 cm is maintained between the antenna and users, and

2) This device and its antenna(s) must not be co‑located with any other transmitters except in accordance with FCC multi‑transmitter product procedures. Referring to the multi‑transmitter policy, multiple transmitter(s) and module(s) can be operated simultaneously without C2P.

3) For all products market in US, OEM has to limit the Operating Frequency: 2412-2462 MHz /2402-2480MHz by supplied firmware programming tool. OEM shall not supply any tool or info to the end‑user regarding to Regulatory Domain change.