neakasa

Neakasa M1
Automatic Litter Box

User Manual

EN / JP

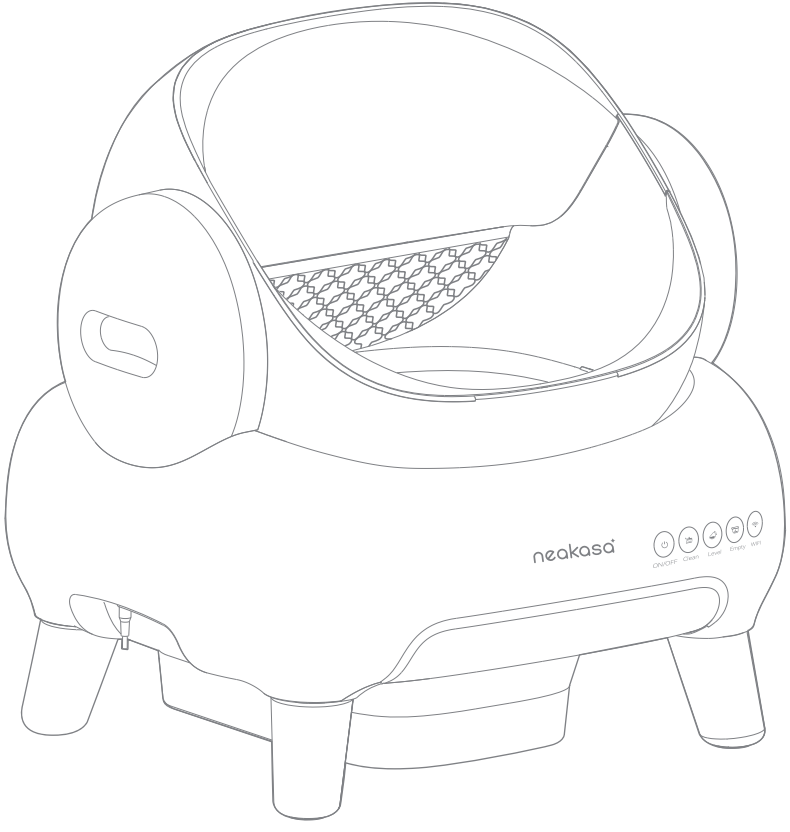

Scan for tutorial video

FCC STATEMENT :
This device complies with Part 15 of the FCC Rules. Operation is subject to the following two conditions:

(1) This device may not cause harmful interference, and
(2) This device must accept any interference received, including interference that may cause undesired operation.
Warning: Changes or modifications not expressly approved by the party responsible for compliance could void the user's authority to operate the equipment.
NOTE: This equipment has been tested and found to comply with the limits for a Class B digital device, pursuant to Part 15 of the FCC Rules. These limits are designed to provide reasonable protection against harmful interference in a residential installation. This equipment generates uses and can radiate radio frequency energy and, if not installed and used in accordance with the instructions, may cause harmful interference to radio communications. However, there is no guarantee that interference will not occur in a particular installation. If this equipment does cause harmful interference to radio or television reception, which can be determined by turning the equipment off and on, the user is encouraged to try to correct the interference by one or more of the following measures:

Reorient or relocate the receiving antenna.
Increase the separation between the equipment and receiver.
Connect the equipment into an outlet on a circuit different from that to which the receiver is connected.
Consult the dealer or an experienced radio/TV technician for help.

FCC Radiation Exposure Statement:
This equipment complies with FCC radiation exposure limits set forth for an uncontrolled environment. This equipment should be installed and operated with minimum distance 20cm between the radiator & your body.

Content

Safety Instructions - 01
Package Content - 02
Parts Instructions - 03
Usage Instructions (Get started, Methods to guide cats, Buttons and Indicator Light) - - - - - - - - - - 04-12
Maintenance - 13-17
Product Specs - 18
Warranty Service - 19

目次

安全上のご注意 - 20
製品情報 - 21
部品名称 - 22
仕様説明 (使用准备、猫に興味をもたせます、ボタンとライト説明) - 23-31
日常メンテナンス - 32-36
製品仕様 - 37
保証サービス - 38

Safety Instructions

EN

- Place the product in a stable, indoor, cool, and dry location, avoiding exposure to direct sunlight to prevent component aging.
- Keep out of reach of children. Children and those with disabilities should use the product under adult supervision.
- Do not use gasoline or other organic solvents to clean the product. Avoid washing or immersing the entire product in water.
- To save electricity, turn off the power switch and clean out any remaining litter when the product is not in use for an extended period.
- Do not connect the boost transformer to the power plug.
- The product must not be used in areas with water splashes.
- Ensure the product is securely installed before use. Always place the product on a clean and flat hard surface.
- When cutting off the power supply, please do not directly pull the power cord to avoid damaging it.
- Keep flammable and volatile substances away from the product.
- During transportation and handling, handle with care to prevent collisions and scratches on the product and accessories.
- The product is not suitable for outdoor use. It should be placed in a well-ventilated, dry environment with a temperature between 4-40°C and a relative humidity not exceeding 90%, and free from corrosive gases in the surroundings.
- It is recommended to use bentonite cat litter. Empty the litter chamber and trash bin after the product is not in use.
- Keep the power plug clean and avoid unplugging it with wet hands.
- When the litter chamber rotates, the machine may produce slight vibrations and noise, which is normal.
- Damp or dusty areas may cause circuit damage.
- Strong magnetic objects nearby may cause fires, product damage, or circuit malfunctions.
- When moving the product, handle it gently and avoid dragging it.
- Do not place other items on top of the product, as it may affect its normal operation.
- Use only the dedicated accessories provided by our company with the product.
- For cats weighing less than 1kg, pregnant cats and nursing cats, set the device to Kitten Mode. Clean under supervision using the control buttons.

Package Content

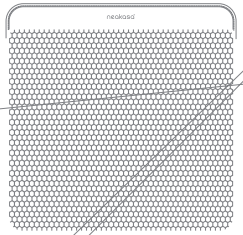

Main Unit

Litter Trapping Mat

Support Legs x4

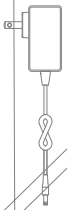

Power Adapter

Trash Bags (15 pieces/roll) x2

User Manual

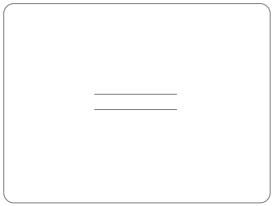

Quick Guide

Parts Instructions

EN

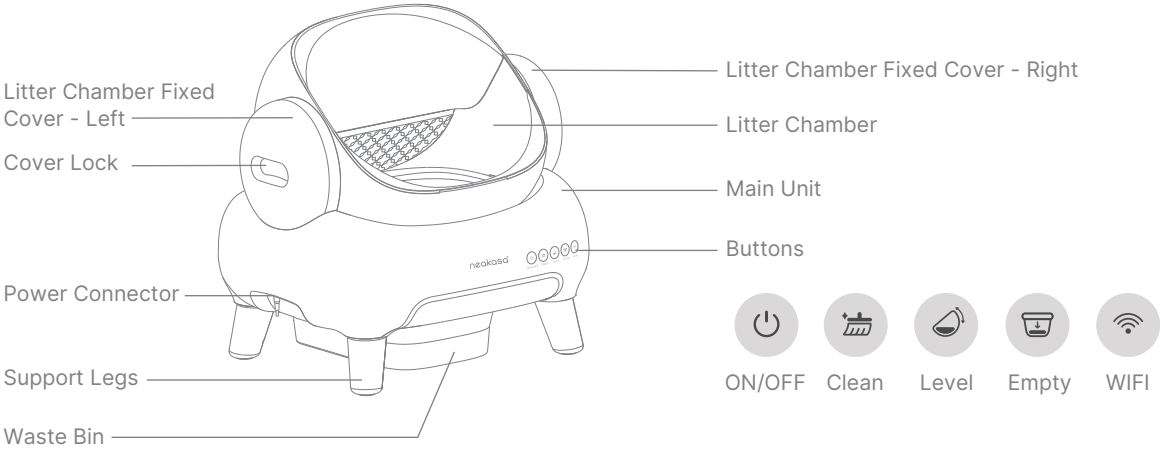

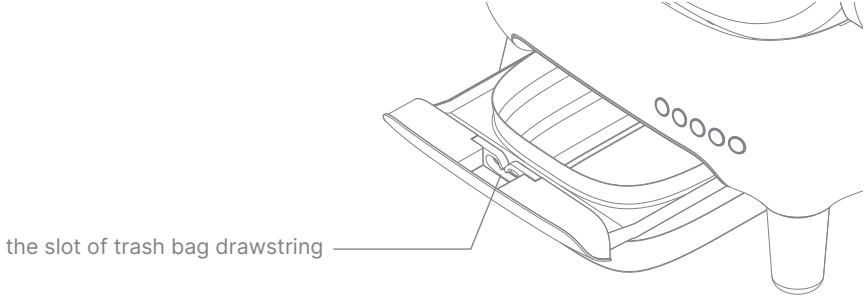

Usage Instructions

EN

Scan to view
tutorial video

Get started

Install

1. Install Support legs

Take the machine out of the packaging box, turn the machine sideways and place it on the litter trapping mat, and install the four support legs into the round holes at the bottom of the machine body in the direction of outward expansion. And place the machine flat after installation.

ⓘ Do not forcefully rotate the litter chamber. The machine will return to its default position when powered on.

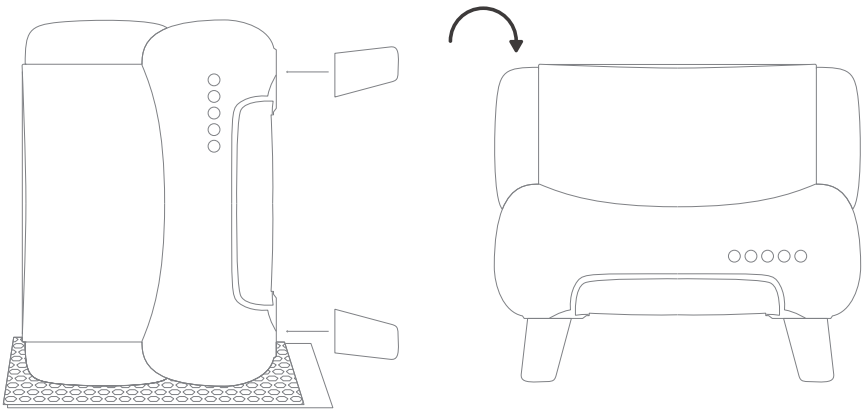

Usage Instructions

EN

2. Expand waste bin and set trash bag

Pull out the waste bin, press the bottom of the waste bin to unfold the waste bin, take out a trash bag and set it up in the waste bin, and insert the drawstring of the trash bag into the slot. Then return the waste bin to the bottom of the machine.

ⓘ Please make sure the waste bin is placed correctly.

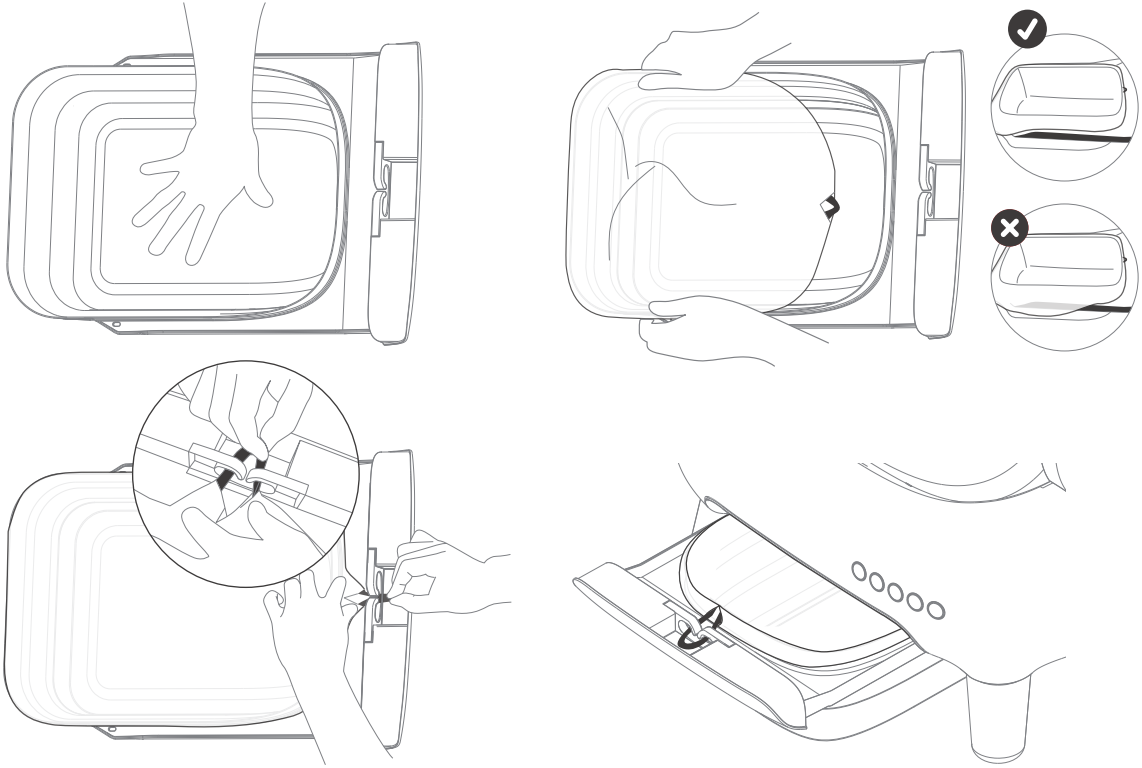

Usage Instructions

EN

3. Place machine and litter trapping mat & Power on

Move the machine to the desired location (it is recommended to hold the bottom of the machine body), and place the litter trapping mat at the entrance of the litter champer. Plug in the power adapter.

- Please place the machine on a flat surface, preferably in the same location or nearby where the previous cat litter box was positioned. Avoid placing it outdoors.
- After turning on the power, the device will automatically adjust the litter chamber to its default position. Do not rotate the waste bin manually.

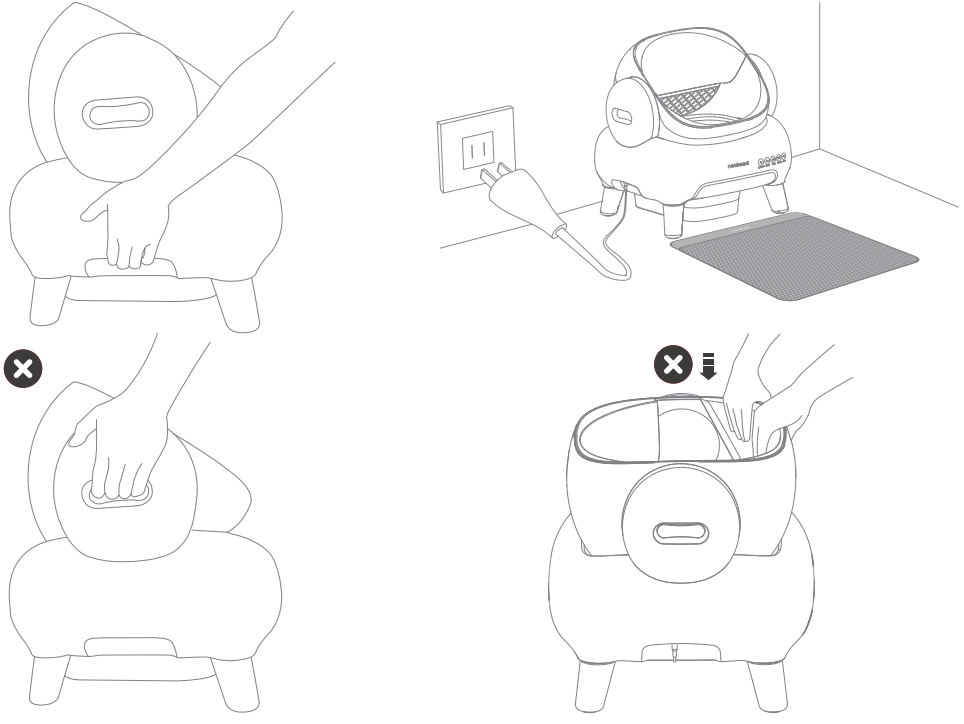

Usage Instructions

EN

4. Add cat litter

Add cat litter to the scale range, not 50% below or 100% above the scale.

- We recommend using clumping bentonite cat litter.
- Avoid using pellet cat litter (grain diameter exceeding 3mm, length exceeding 10mm), as it may result in unnecessary wastage of cat litter.

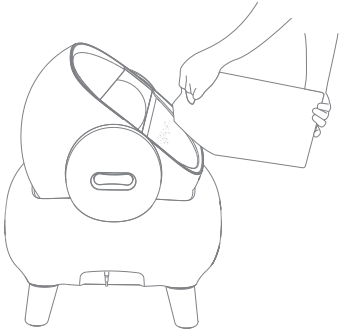

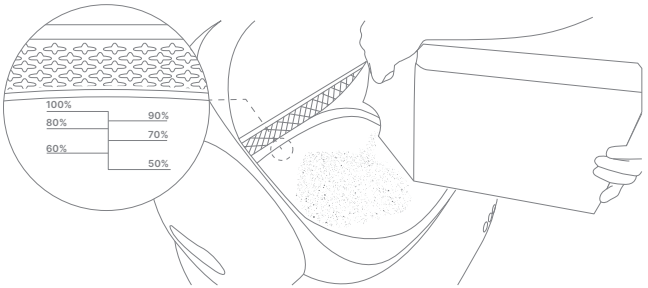

5. Level cat litter

After pouring in the cat litter, you can use the button to flatten the litter instantly. Alternatively, you can wait one minute for the machine to automatically perform the leveling process.

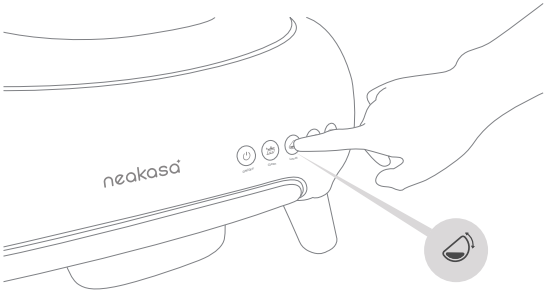

Usage Instructions

EN

APP Connection

Download neakasa APP and follow the steps in the APP to connect.

ⓘ
- Please turn on Bluetooth and location services when connecting with your M1.
- The M1 will automatic clean 5 minutes after your cat leaves. Additionally, it will remind you every month to clean the litter chamber and waste bin. You can modify this in neakasa APP system setting.

❶

Neakasa

Download on the App Store

GET IT ON Google Play

❷

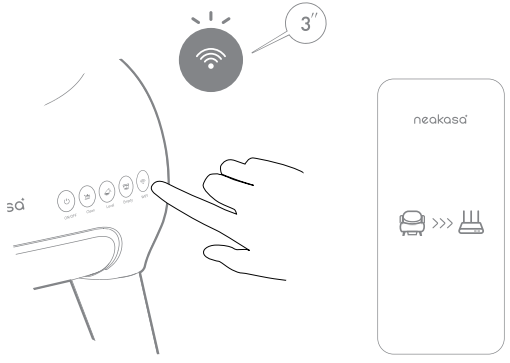

Usage Instructions

EN

Cat Litter Level Calibration

(The innovative design of the M1 litter box allows us to measure the remaining cat litter in the litter compartment.)

1

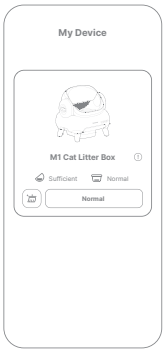

2

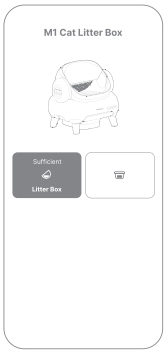

3

4

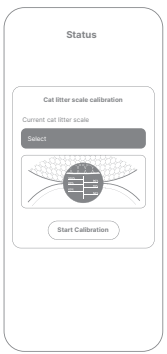

5

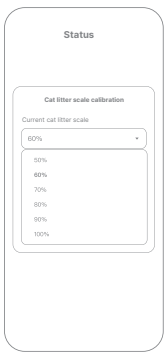

6

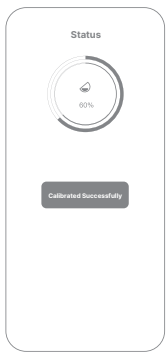

ⓘ

- If you change the type of cat litter, you'll need to recalibrate the litter level.
- Please ensure there are no objects placed on the litter box to avoid inaccurate weight measurement.

Methods to guide cats

- Add some used cat litter to the litter box to help familiarize the cat with it (when replacing the litter box, it's recommended to continue using the old litter at first).
- Place cat treats at the entrance of the litter box to help the cat discover the new litter box.
- For timid cats, it's advisable to manually clean for the first few days. Once the cat is familiar and comfortable, you can switch to automatic cleaning mode.

Usage Instructions

Buttons and Indicator Light
(Function Description)

Button	Basic Functions	Indicator Lights
ON/OFF	Long press for 3 seconds to turn on or off	Powered on: Steady white light; Powered off: Not lit
Clean	Press once to start a cleaning cycle	Normal state: Not lit; Cleaning in progress: Green light breathing; Resetting: White light blinking
Level	Press once to level the cat litter	Normal state: Not lit; Leveling in progress: Green light breathing; Resetting: White light blinking
Empty	Long press for 3 seconds to dump all the cat litter	Normal state: Not lit; Dump litter in progress: Green light breathing; Resetting: White light blinking
WIFI	Long press for 3 seconds to reset the network	WIFI connected: White light; WIFI disconnected: Orange light; Connecting to the network: White light blinking
	Long press the Cleaning Button for 10 seconds	Five green lights blinking for 2 seconds indicating a successful factory reset.

- Interrupt: During the cleaning, leveling, and emptying litter processes, pressing any button once will interrupt the operation, and the machine will initiate a reset action. While the reset is ongoing, the buttons will be inactive unless there is a malfunction.

Usage Instructions

(Indicator Light for Malfunctions)

Light Button	Indicator Lights Status	Malfunctions reason	Solution
ON/OFF	Red blinking	Weight sensor overloaded.	Check if there are other objects placed in the cat litter box. If so, just remove the items; if not, please contact customer service
	Steady red	Left/right litter chamber fixed cover not installed.	If the left/right litter chamber fixed cover is not installed, just install it into the machine; If the left/right litter chamber fixed cover has been installed, check whether it is installed in place.
Clean	Red blinking	Chamber door motor blocked	Remove the litter chamber and check whether there is any other object stuck in the door of the bottom of the machine. If so, just clean it; if not, please contact customer service
	Steady red	Litter chamber motor blocked	Remove the left/right litter chamber fixed cover and check whether there is any other object stuck in the gear. If so, just clean it; if not, please contact customer service
	Yellow blinking	Cleaning interrupted by the cat, and the light will go off after resuming.	Wait for the cat to leave or hold the cat away. After about 1 minute, the machine will automatically start to perform the work before interruption.
Level	Red blinking	Insufficient cat litter	Add the amount of cat litter in the litter chamber to the range of 50%-100% of the scale (it is recommended to add it to more than 70%). If the red light still flashes, please recalibrate the cat litter level in the APP. [Refer to the method for calibrating the litter level on page 09.]
	Steady red	Litter chamber not in position	Load the waste bin into the machine and install the left/right litter chamber fixed cover.
	Yellow blinking	Leveling interrupted by cat, yellow light continues blinking until interruption resolved	Wait for the cat to leave or hold the cat away. After about 1 minute, the machine will automatically start to perform the work before interruption.
	Yellow steady	Excessive cat litter	Reduce the amount of cat litter in the litter chamber to within the range of 50%-100% of the scale.
Empty	Red blinking	Waste bin is full or trash bags are not set properly	Clean the waste bin and put on a new trash bag, or tidy the trash bag to make sure there is no floating inside the bag.
	Steady red	Waste bin not in position	Pull out the waste bin and put it back again to ensure that the waste bin is correctly placed.
WIFI	Steady orange light	Network disconnected	Check whether the network is normal. If the network is disconnected, please reconnect to the network. If the network is normal, please press and hold the button for 3 seconds, open the APP and reconnect to the Internet.

- Five lights red blinking at the same time means there is an error in the weighing sensor. Please disconnect the power and then power on and restart the machine; if the red light still blinks, please contact customer service.

Maintenance

Adding Cat Litter

- When the cat litter level is below 60%, it's time to add some cat litter. Be cautious not to exceed the 100% marking line when adding litter. (The machine can automatically detect when you add cat litter and when the cat enters the litter box).
- Approximately 1 minutes after adding cat litter, the system will automatically level the litter and update the litter level.
- If you change the type of the cat litter, it may cause inaccuracies in the litter level detection. In such cases, recalibration is necessary. [Refer to the method for calibrating the litter level on page 09.]

Maintenance

Waste Bin Cleaning and Maintenance

1. Clean waste bin

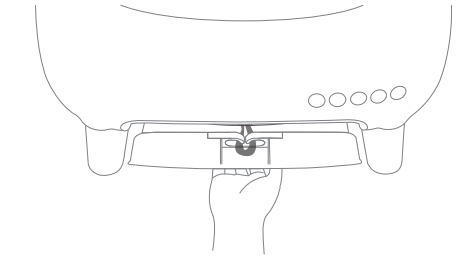

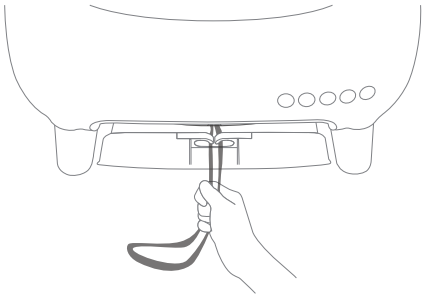

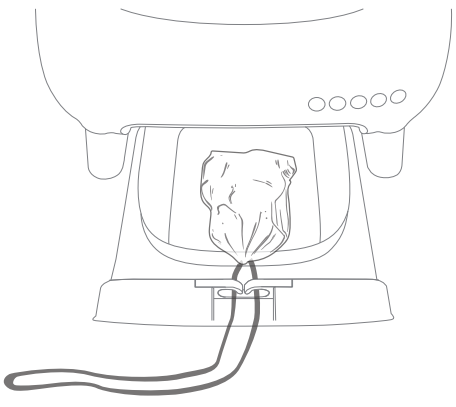

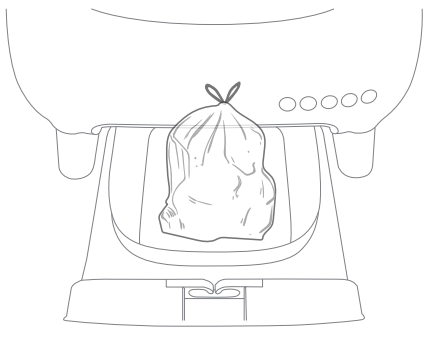

Maintenance

2. Set new trash bag

ⓘ If the red light of the button flashes, it is because the undulating part of the trash bag blocks the internal infrared sensor. Just arrange the trash bag and put it in.

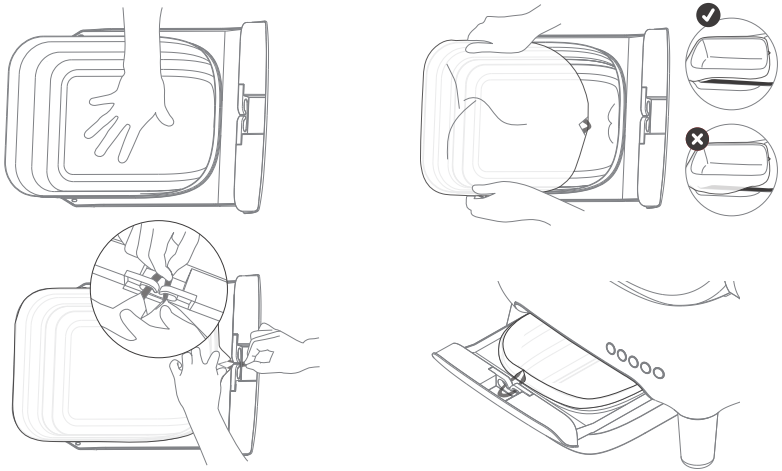

- Empty the waste bin every 7 to 10 days for a cat, and no longer than 14 days. When the temperature is high in summer, empty it 7 days to prevent the breeding of flies.
- The waste bin can accumulate strong odors due to long-term storage of foul-smelling materials. You can pull it out and rinse it with water, then let it dry before placing a new trash bag. We recommend cleaning it once every 1-2 months.

Emptying Cat Litter

- It is recommended to empty all the cat litter and clean the litter chamber and waste bin once a month to reduce odor buildup in the litter chamber.
- Before using the button, please open the waste bin and check to make sure there is enough remaining space in the waste bin. Otherwise, it may exceed the capacity of the waste bin and the door may be stuck. (If it gets blocked, stay calm. Slowly pull out the waste bin, move it back and forth 4-5 times to level the litter, then slowly pull out the waste bin again).

Maintenance

Litter Chamber Cleaning

ⓘ Before cleaning the litter chamber, please unplug the power. (Once powered off, there is no need to reconnect to WIFI when powering on again.)

1. After emptying all the cat litter, unlock covers on both sides of the litter chamber and pull them outward to remove the litter chamber.

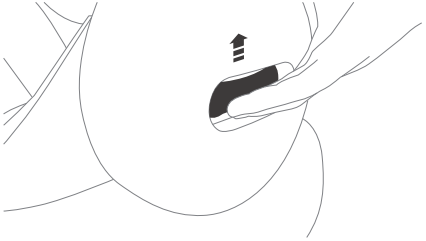

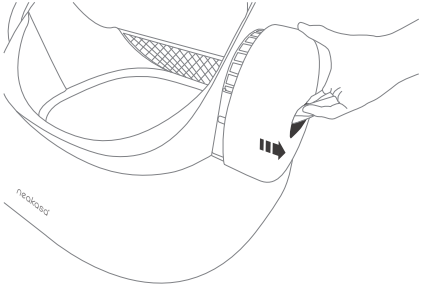

2. You can rinse the litter chamber with water or use a brush to clean it. After rinsing, make sure to keep the opening facing upwards and place it in a well-ventilated area to dry before putting it back for use.

ⓘ Avoid drying it with the opening facing downwards, as it may cause water to accumulate inside the gaps.

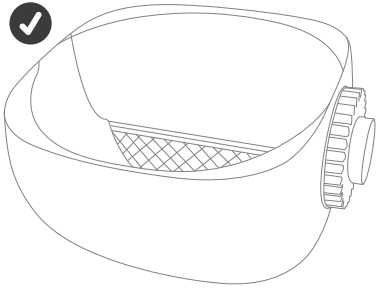

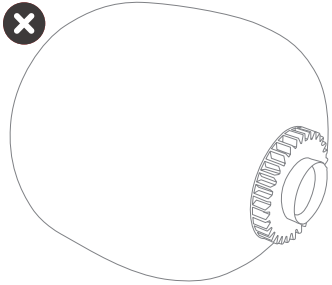

Maintenance

EN

Main Body Cleaning

- Do not wash the body of the machine directly with water

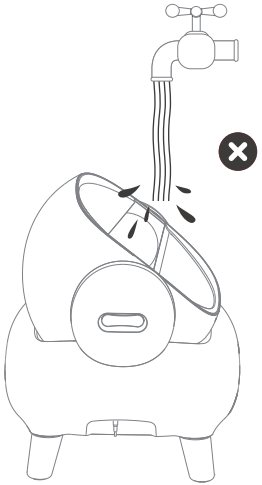

- You can use a damp cloth to wipe off dirt and dust from the main body.

- Avoid applying force to the chamber door area to prevent deformation, which may hinder normal opening and closing.

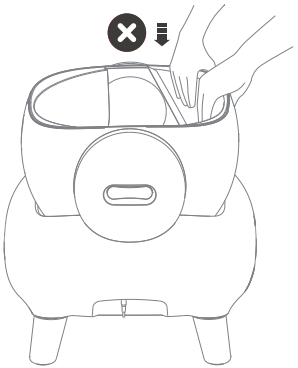

Product Specs

EN

Product Model	PS0120
Rated Power	24W
Rated Voltage	12V
Cat Litter Maximum Capacity	6.5L
Waste Bin Capacity	11L
Litter Chamber Entrance Height	35cm or 13.8 inch
Operating Noise Level	50dB