Permanent Outdoor Light

JSK-F50 instruction manual

Permanent Outdoor Light

Features

1. 16 million colors static color adjustment, brightness adjustment
2. Timer switch & countdown function
3. Built-in 6 local music rhythm modes, support built-in micro-phone and mobile phone microphone music, support speed and sensitivity adjustment in music mode
4. Built-in 44 dynamic scene modes, rainbow, flowing water, horse racing, etc.; and any DIY dynamic scene

IP65 | 20000H | Easy to install | TUYA WIFI | Bluetooth control | -20℃~+45℃

Application

Product application: villas, buildings, home depot, scenic spots, parks, and other outdoor places.

Product Size

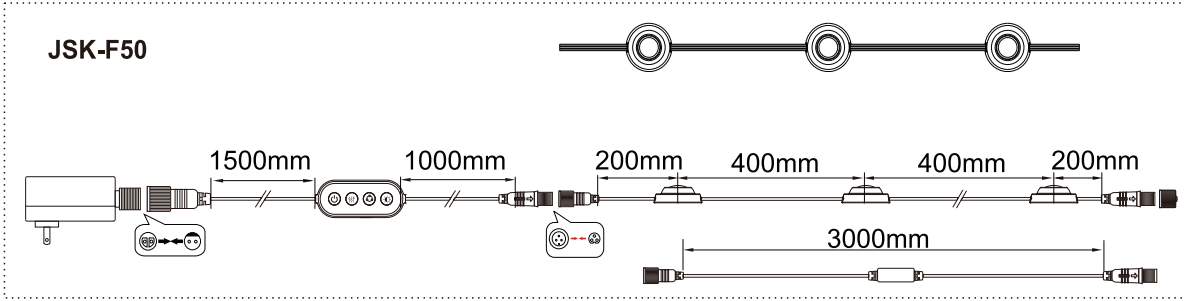

Technical Details

Model	JSK-F50		
Power	Power/pc: 0.6W Power/set(36pcs): 18W		
Power supply	DC24V 1.5A		
Voltage	DC24V		
Led type	5054RGB		
Led Qty	5054RGB 36pcs		
Beam angle	120°		
Appearance color	White		
Material	PC+ABS		
Control method	APP / Button Control		
Voice control	Alexa / Google / Amazon		
Connection	2.4GHz Wifi+Bluetooth		
Operating temperature	-20℃~+45℃		
Storage temperature	-20℃~+45℃ (20℃ is best-fit)		

Installation

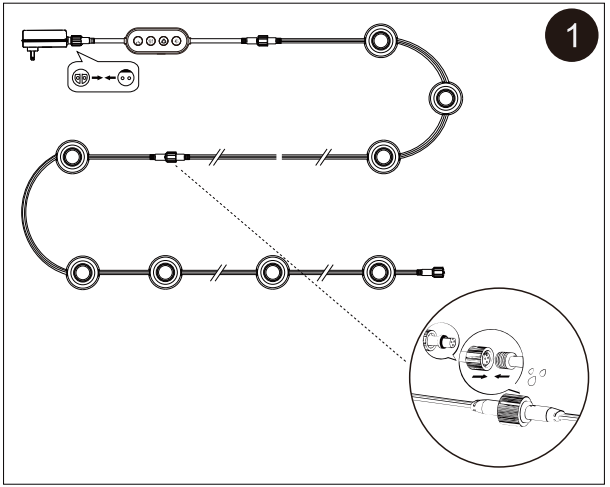

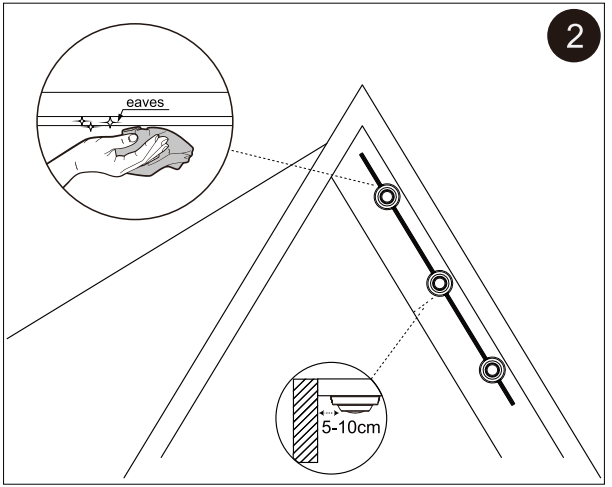

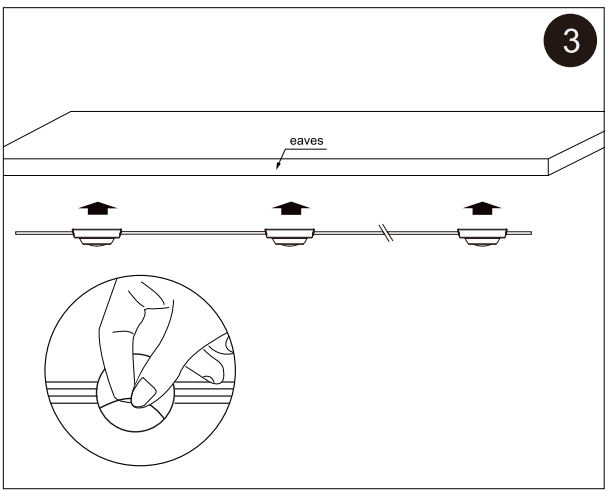

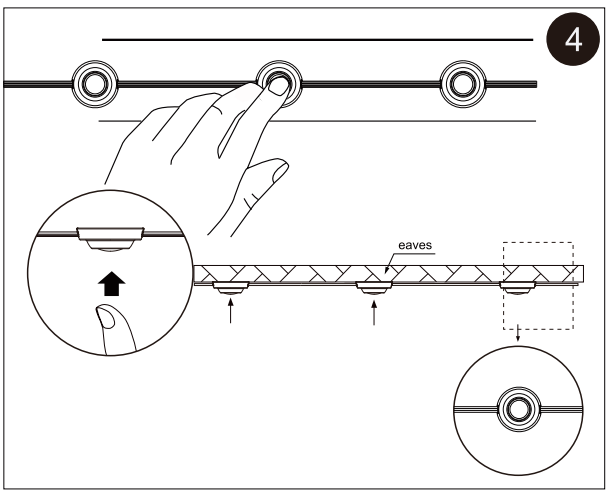

1. Before installing the permanent lights, please connect each segment of the lights and then power on to confirm if all devices are functioning properly. Note: Connect first, then power on. Do not connect after powering on to avoid a sudden surge of current that may damage the devices.

2. Clean the surface of the planned installation area with a cloth or tissue, ensuring it is dry and free from debris. It is recommended to install under the soffit, keeping 5-10cm from the wall.

3. Peel off the adhesive on the back of the permanent lights. If the eaves are positioned at a right angle to the wall, use equally spaced fixtures to align the lights tightly against the edge of the fixture,and then press it upwards firmly.

4. After installation, use the steel nail cable clips and back adhesive cable clips provided in the accessory kit for securing. It is recommended to use one steel nail cable clip and one back adhesive cable clip to reinforce every two lights.

Packing List

Controller*1

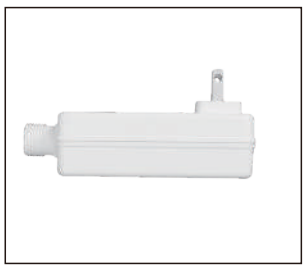

Power supply*1

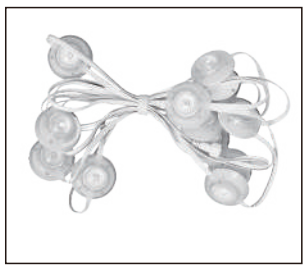

LED string lights*3/6/9

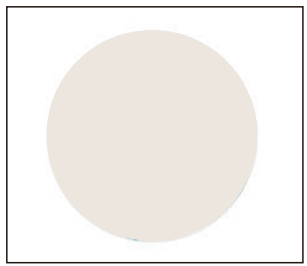

Spare: adhesive

Screw 2/3/5 packs

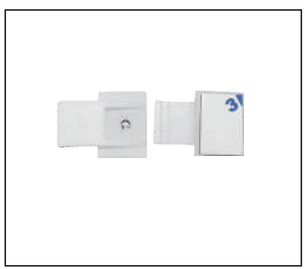

Line buckle with sticker

Choke Point（TBC）

Instruction manual*1

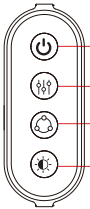

App Functions

Connect The Device Via The "tuya" App

1.First, search for the "Tuya" APP in the Apple Store or App Market, download and install it, or scan the QR code below to download and install

Supported device types

2. Product distribution network (please confirm that the mobile phone is connected to WI-FI and Bluetooth is on):

① After the product is properly connected to the lamp, turn on the power. To enter the distribution network, it is necessary to repeatedly turn on and off the power 3 times, or press and hold the switch button for 5 seconds until the light flashes to enter the distribution network mode;

② Open the " Tuya " APP, and turn on the Bluetooth and WiFi of the mobile phone.Select "Add Device", add the screenbar to the APP according to the on-screen prompts, and you can start using Notice

Notice

• The first time you open the APP, if there is an option to allow permissions, please select "Allow".

• If the android phone cannot search for bluetooth, please check whether to open the position!

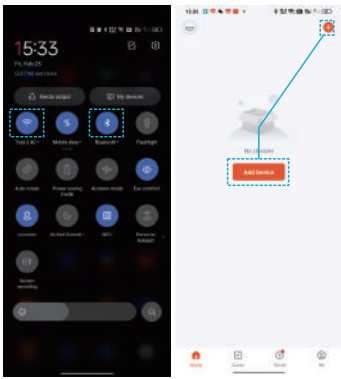

Device connection: ① Add device ② Enter WiFi password ③ Connection succeeded

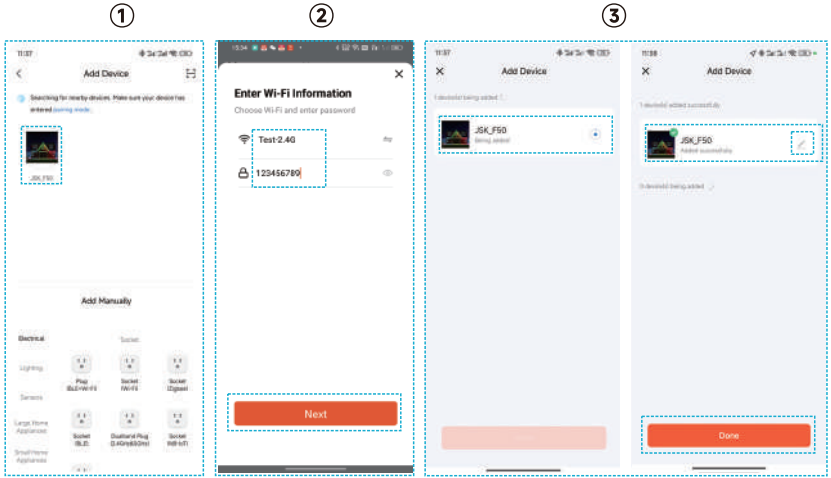

Tip: The bluetooth function in WiFi+Bluetooth dual mode is bluetooth distribution network, automatic identification of the device, after the WiFi and bluetooth is connected to the device, if the WiFi is disconnected or there is no WiFi, and the bluetooth connection can be used.

“Tuya” App Introduction

3. If your light strip has been cut,you can adjust the software parameters to adapt.

4. If your light strip has been cut during use, you can adjust the actual length to better

Set up the light strip,then confirm.

Light Color Setting Mode

5. ① ② : When you enter the App, you can see five sections: On/Off, Colour, Scene, Music, Plan. Detailed function description please check below.
③ : Color Card
④ : Individual light control color & Individual light control turn off ⑤ : Colors transition

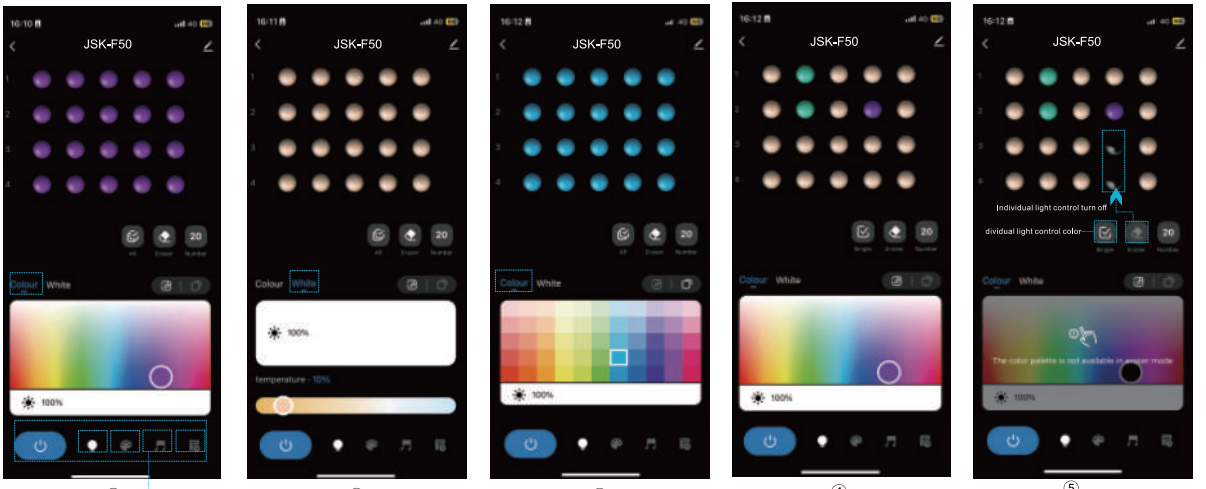

On/Off, Colour, Scene, Music, Plan

6. On/Off: Analog key switch, control the switch of the whole set of Eaves lights.

7. Colour. After the successful connection, enter this Colour UI page by default. This UI page is with 3 icons and 1 digital display.

Scene Mode

8. Scene: It has 44 different scene modes. Supports DIY 50+scenes, edit your favorite scenes. (Note: When you're done editing, be sure to preview and click Save. Next time you open this page, the DIY scene will also be saved.)

Scene Mode: ① DIY ② Scenery ③ Life ④ Festival ⑤ Mood ⑥Add+

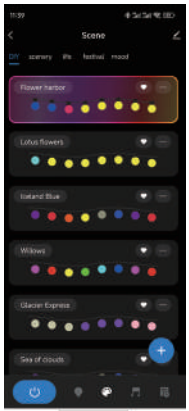

①

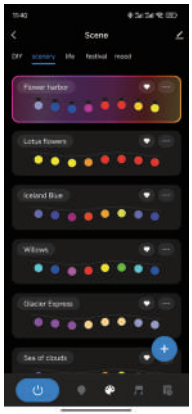

②

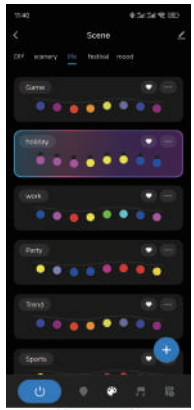

③

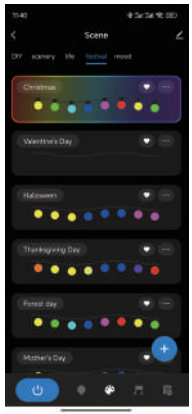

④

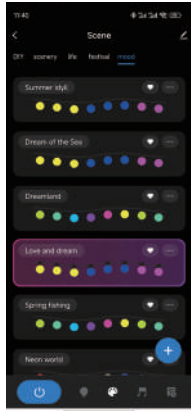

⑤

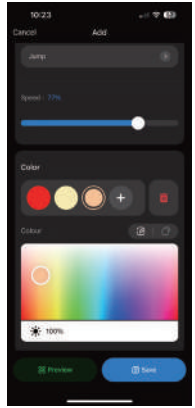

⑥

Plan

9.Plan: The owner can freely set the on/off time of the string light every day.

This device complies with part 15 of the FCC Rules. Operation is subject to the following two conditions: (1) This device may not cause harmful interference, and (2) this device must accept any interference received, including interference that may cause undesired operation.

NOTE: This equipment has been tested and found to comply with the limits for a Class B digital device, pursuant to Part 15 of the FCC Rules. These limits are designed to provide reasonable protection against harmful interference in a residential installation. This equipment generates, uses and can radiate radio frequency energy and, if not installed and used in accordance with the instructions, may cause harmful interference to radio communications. However, there is no guarantee that interference will not occur in a particular installation. If this equipment does cause harmful interference to radio or television reception, which can be determined by turning the equipment off and on, the user is encouraged to try to correct the interference by one or more of the following measures:

-- Reorient or relocate the receiving antenna.

-- Increase the separation between the equipment and receiver.

-- Connect the equipment into an outlet on a circuit different from that to which the receiver is connected.

-- Consult the dealer or an experienced radio/TV technician for help.

Changes or modifications not expressly approved by the party responsible for compliance could void the user's authority to operate the equipment.

This equipment complies with the FCC RF radiation exposure limits set forth for an uncontrolled environment. This equipment should be installed and operated with a minimum distance of 20cm between the radiator and any part of your body.