Safe

Easy to install

Long service life

Not easy to deform

翰萨智能
HANSA INTELLIGENT

Product instructions

WiFi Eight key switch panel

HS-T9W-AC

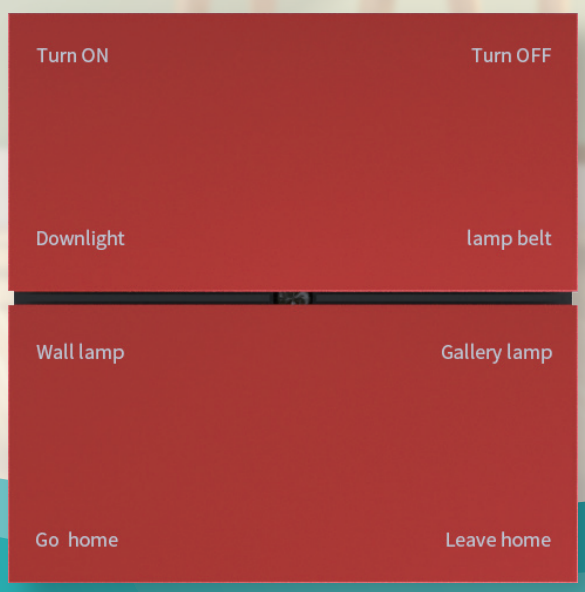

Technology makes life simpler

上海翰萨智能科技有限公司

HANSA INTELLIGENT TECHNOLOGY CO.,ITD

WiFi Eight key switch panel HS-T9W-AC

Size specification

Size：86*86*38 mm ；
Specification：Type 86 switch

Basic parameters

Shell material：ABS+PC，Fire rating V-0；
Border material：ABS+PC，Fire rating V-0；
Panel material：Aluminium alloy；
Input：AC 90~300V；
Output：4-way，Relay output，
Resistive load output≤10A，
Inductive or capacitive load output≤3A；
Appearance color：Polar silver, titanium black,
champagne gold, Begonia red,
sunshine orange, sapphire blue；
Static power consumption：0.1W；
Maximum power consumption：0.2W；
Function key：8-digit function key；
Induction function：Gesture sensing function；
Uplink communication：WiFi 2.4G。

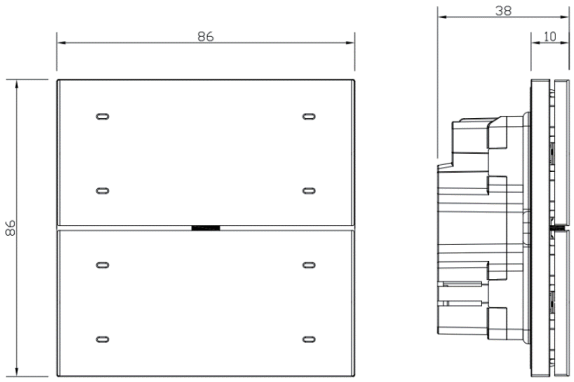

Port description

Strong current terminal：
N--- Zero line input + output (total zero line)
L--- Live line input
L1、L2、L3、L4--- Live line output

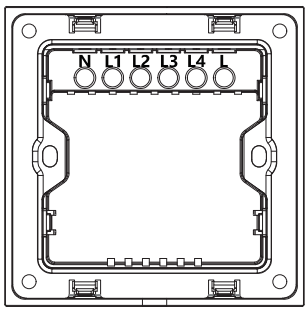

Installation instructions

Installation method：86 type bottom box

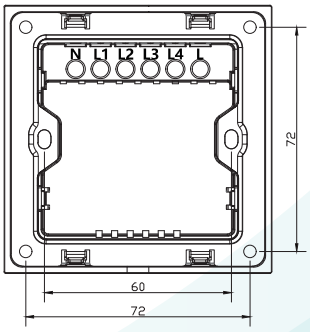

WiFi networking process

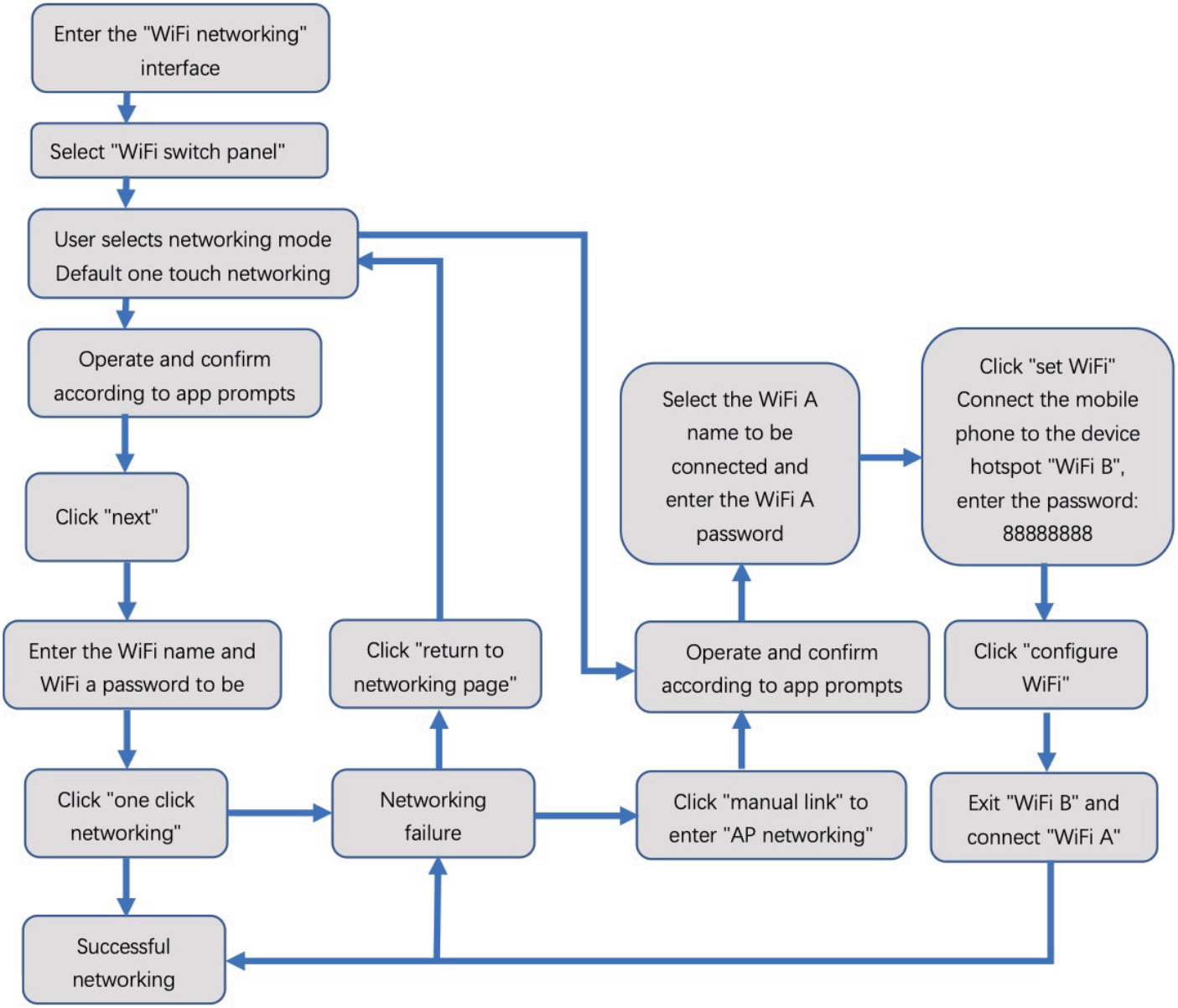

PS:
WIFI A:WiFi used by users (2.4G only)
WIFI B:Device hotspot, password: 88888888

Shanghai Hansa Intelligent Technology Co., Ltd. reserves the right of final interpretation of this instructions

This device complies with Part 15 of the FCC Rules. Operation is subject to the following two conditions: (1) this device may not cause harmful interference, and (2) this device must accept any interference received, including interference that may cause undesired operation

NOTE: This equipment has been tested and found to comply with the limits for a Class B digital device, pursuant to Part 15 of the FCC Rules. These limits are designed to provide reasonable protection against harmful interference in a residential installation. This equipment generates, uses and can radiate radio frequency energy and, if not installed and used in accordance with the instructions, may cause harmful interference to radio communications. However, there is no guarantee that interference will not occur in a particular installation.
If this equipment does cause harmful interference to radio or television reception, which can be determined by turning the equipment off and on, the user is encouraged to try to correct the interference by one or more of the following measures:
-- Reorient or relocate the receiving antenna.
-- Increase the separation between the equipment and receiver.
-- Connect the equipment into an outlet on a circuit different from that to which the receiver is connected.
-- Consult the dealer or an experienced radio/TV technician for help.

Warning: changes or modifications not expressly approved by the party responsible for compliance could void the user's authority to operate the equipment

Radiation Exposure Statement
This equipment complies with FCC radiation exposure limits set forth for an uncontrolled environment.
This equipment should be installed and operated with minimum distance 20cm between the radiator and your body.