# JIGCODA

## LE-1

Laser Engraving Machine

# Contents

JICODA


- **Package list check** ----------2
- **Set up LE-1**----------4
- **Download and install software** ----------34
- **Safety guidelines**----------42
- **One year warranty**----------43

# PT.1 Package list check

Rear rail *1

X Rail *1

Right Side Rail *1

Left Side Rail *1

Front rail *1

Y Endstop *1

Tensioner Assembly *1

Laser Module *1

Control Board *1

L Motor assembly *1

R Motor assembly *1

X Sliding Assembly *1

X Endstop *1

L-angle bracket *4

Drag chain bracket *1

X Drag Chain Bracket *1

Frame Foot *3

Y Drag Chain Support *1

White Nylon Tubes 25 *2

# PT.1 Package list check

Y Synchronous Belts *2

X Synchronous Belts *1

24V Adapters *1

Power cable *1

M3x6 Screws *14

M3x8 Screws *7

M5x18 Screws *5

Protective glasses *1

USB cable *1

M5x20 Screws * 11

M5x25 Screws *1

M5x8 Screws * 6

M5x55 Screw *1

M4x8 Screws *8

Belt Screws *4

Tool Kit *1

Measuring tools *1

## Step 1

Parts Required:

- M3x6 Screws *2
- Drag chain bracket *1
- R Motor assembly *1

Align the holes as shown and secure with M3x6 screws.

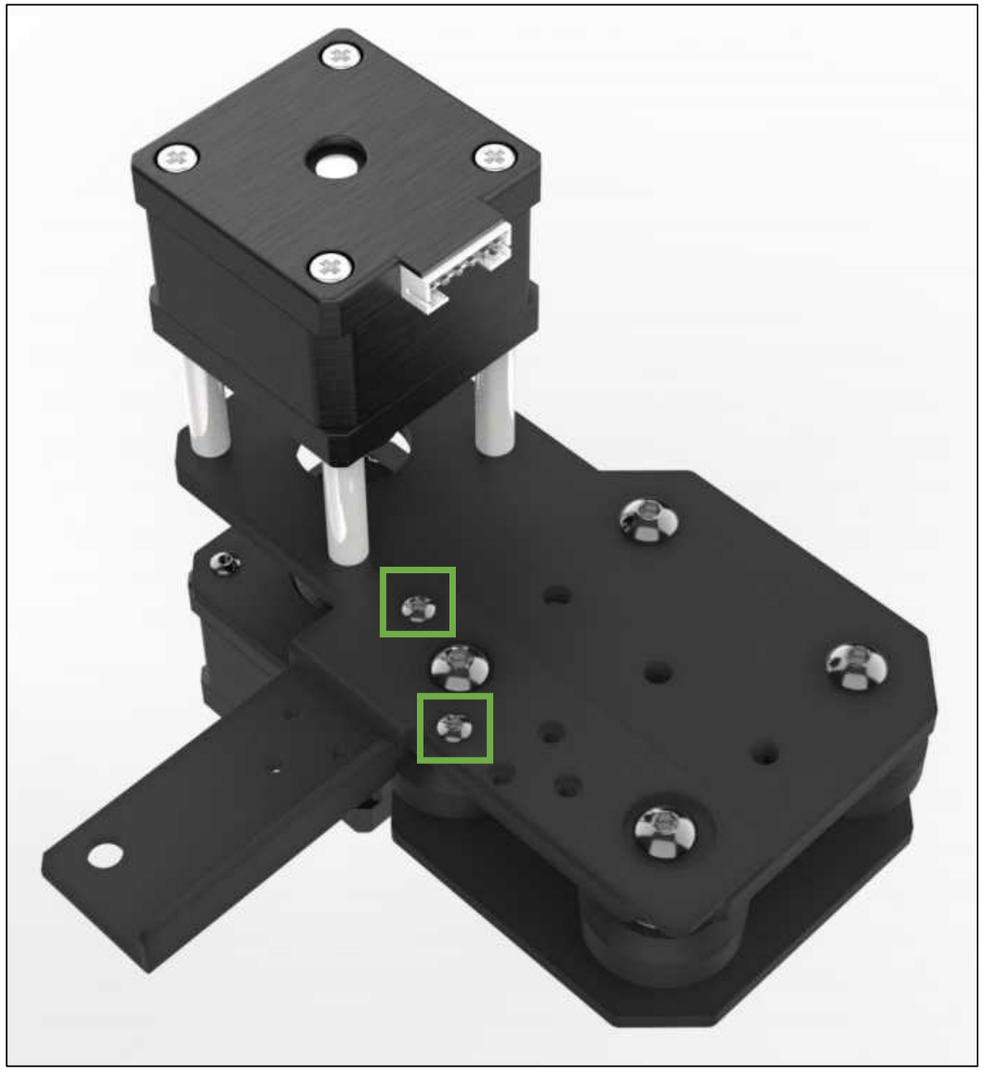

**Step 2** 1/2

Parts Required:

- Right Side Rail *1
- Assembly (Step 1) *1

Identify the Right Side Rail by the scale on the surface and the orientation of the hole.

Slide the Assembly (Step 1) assembly into the Right Side Rail, following the direction of the arrow in the diagram.

JICCODA

**Step 2** 2/2

Parts Required:

- Assembly (Step 2) *1

If the assembly is very loose in the Rail, use a hexagonal spanner to adjust the rollers as shown by the arrows in the picture.

Notes :

1. The same set of rollers are adjusted at the same time.

2. Optimum looseness: the POM wheels rub slightly against the guide rails as they turn.

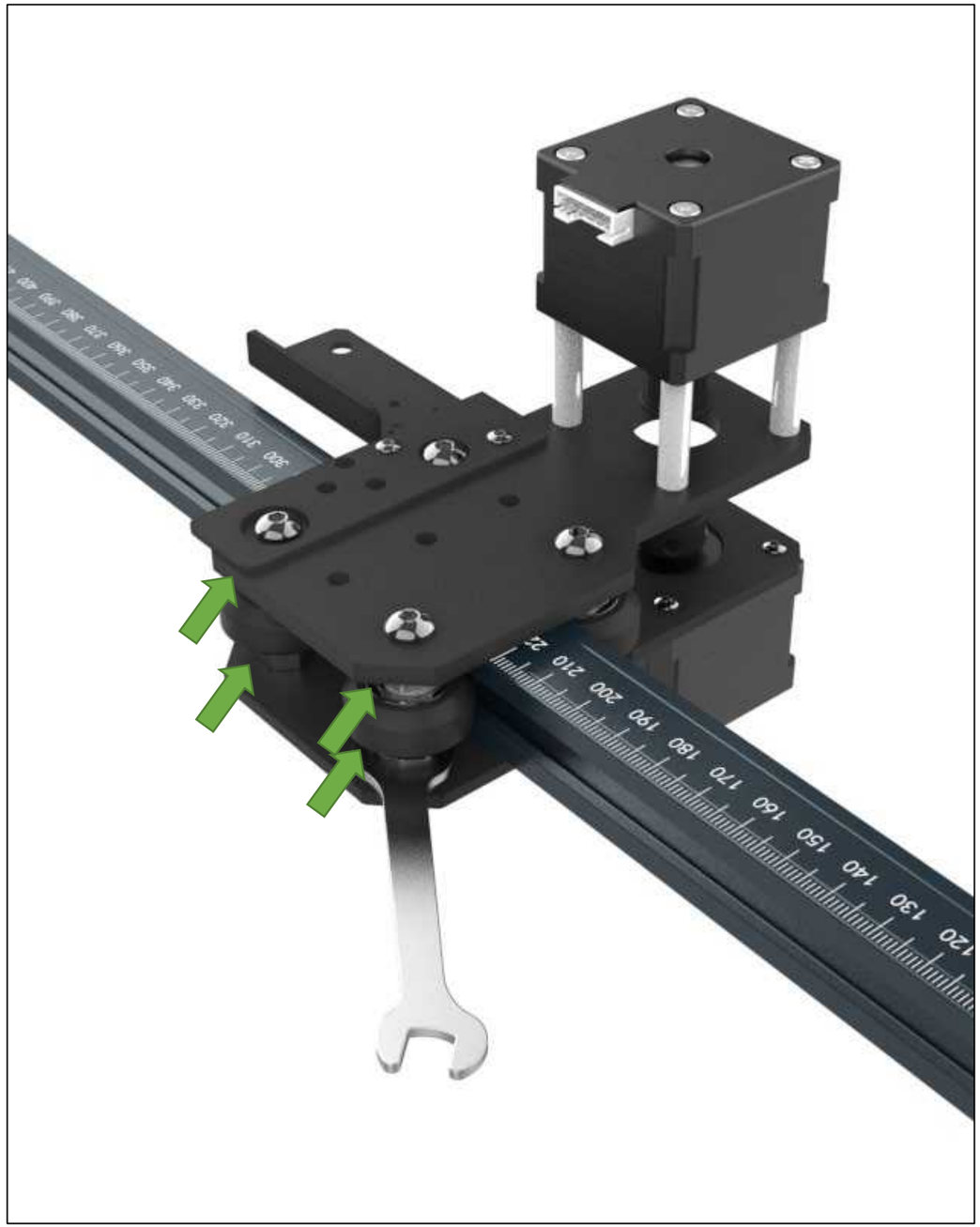

## Step 3

Parts Required:

- Assembly (Step 2) *1
- Y Synchronous Belts *1
- Belt Screws *2

3.1 Belt screw slides in through the guide slot (in the direction of the arrow)

3.2 The belt is placed under the belt screw and the screw is tightened

3.3 Belt wraps around the gear on the motor (as shown)

3.4 Tighten the belt and tighten the other section of the spray belt screw (position as shown)

Note: Do not cover the screw holes in the guide rails, otherwise the screws will not be installed in the next step.

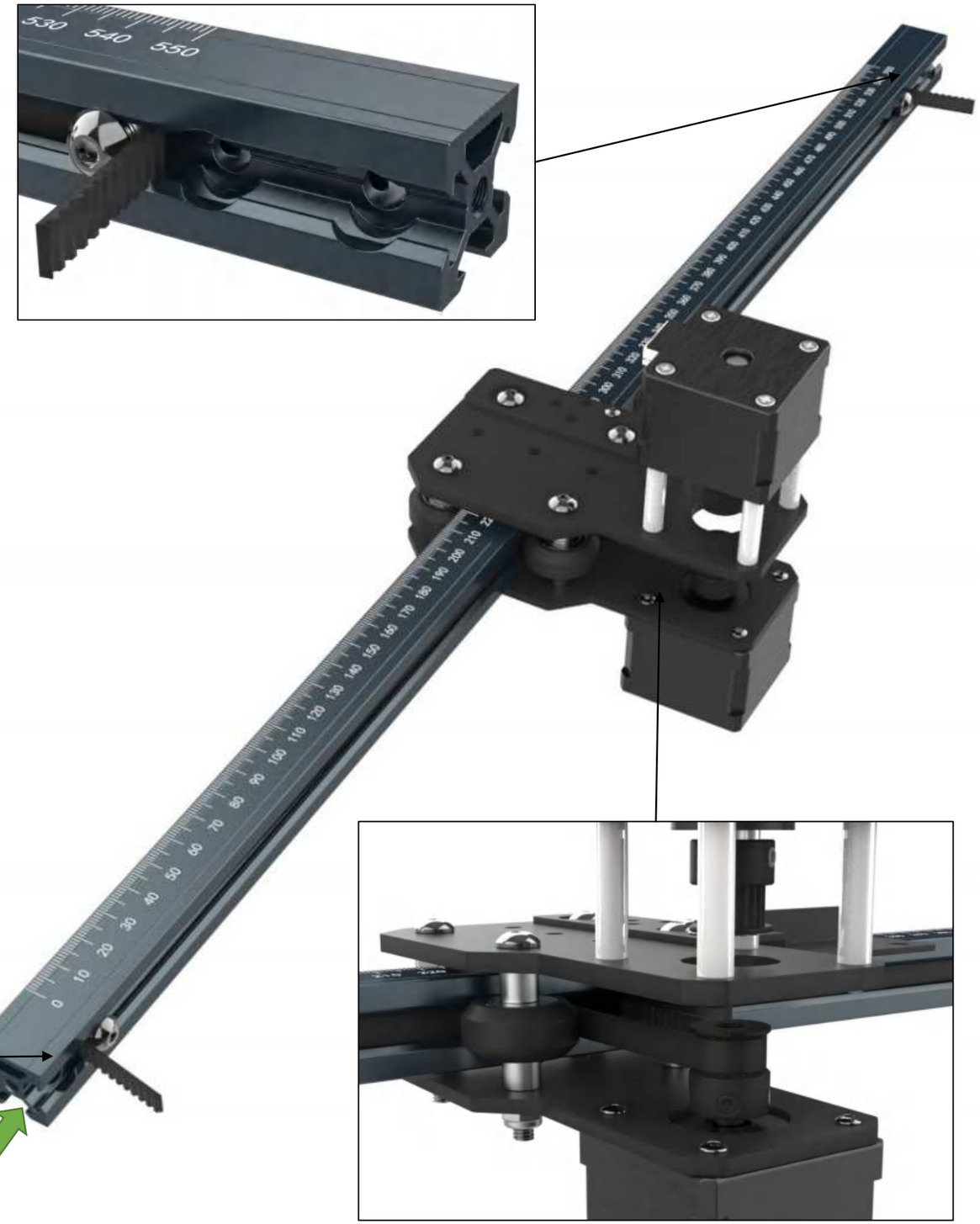

## Step 4

Parts Required:

- Assembly (Step 3) *1
- Y Endstop *1
- M5x20 Screws *1

**Note the direction of installation**

Stick flat on the bottom of the rail and fix with M5x20 screws.

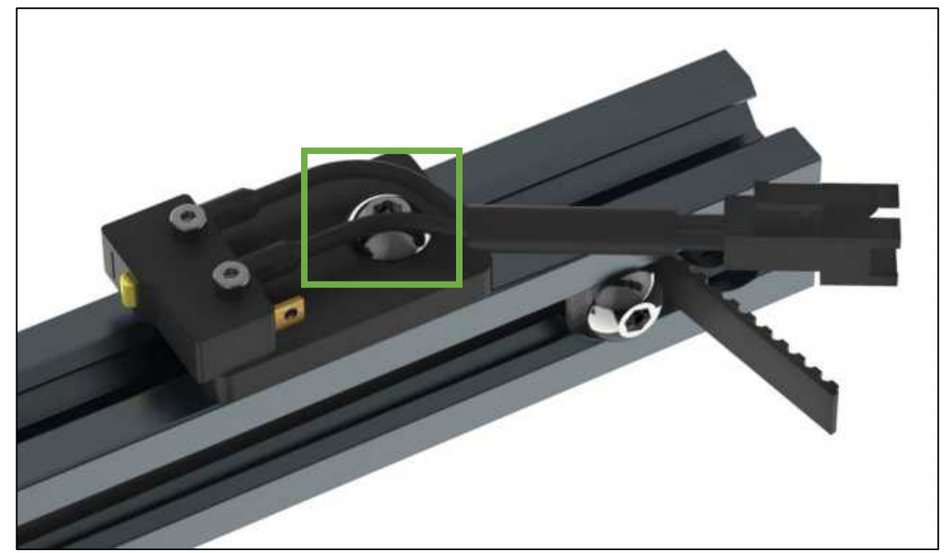

**Step 5** 1/2

Parts Required:

- Left Side Rail *1
- L Motor assembly *1

Identify the Right Side Rail by the scale on the surface and the orientation of the hole.

Slide the L Motor assembly into the Right Side Rail, following the direction of the arrow in the diagram.

**Step 5** 2/2

Parts Required:

- Assembly (Step 5) *1

If the assembly is very loose in the Rail, use a hexagonal spanner to adjust the rollers as shown by the arrows in the picture.

Notes：
1. The same set of rollers are adjusted at the same time.
2. Optimum looseness: the POM wheels rub slightly against the guide rails as they turn.

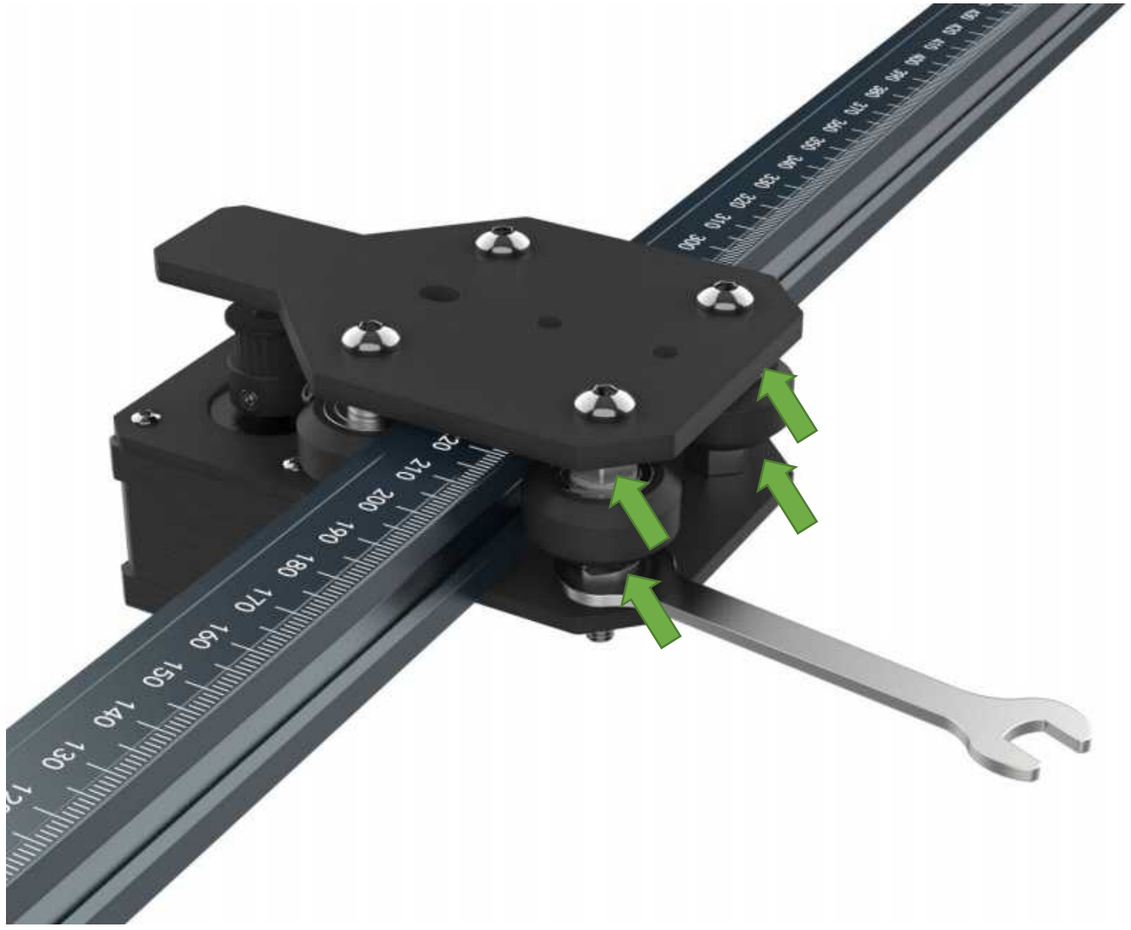

## Step 6

Parts Required:

- Assembly (Step 5) *1
- Y Synchronous Belts *1
- Belt Screws *2

3.1 Belt screw slides in through the guide slot (in the direction of the arrow)

3.2 The belt is placed under the belt screw and the screw is tightened

3.3 Belt wraps around the gear on the motor (as shown)

3.4 Tighten the belt and tighten the other section of the spray belt screw (position as shown)

Note: Do not cover the screw holes in the guide rails, otherwise the screws will not be installed in the next step.

JICCODA

## Step 7

Parts Required:

- Assembly (Step 4) *1
- Assembly (Step 6) *1
- Front rail *1
- Rear rail *1
- M5x20 Screws *6

Place according to the scale markings (as indicated by the arrows in the picture)

Fix the frame with M5x20 screws

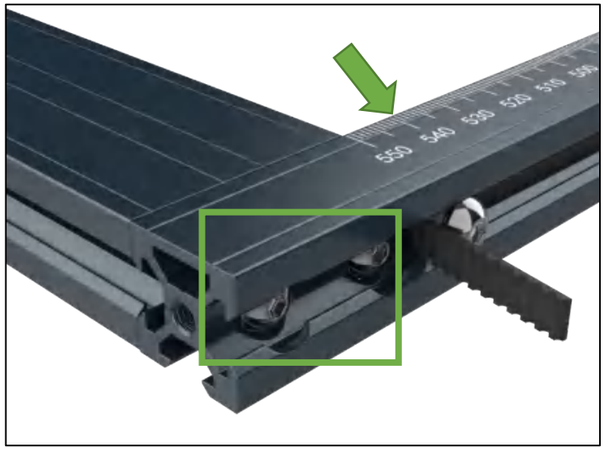

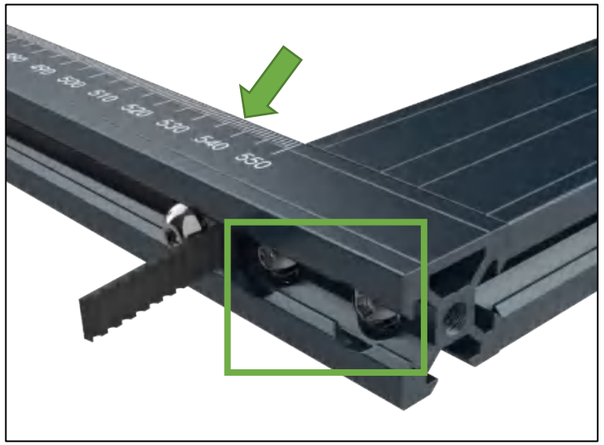

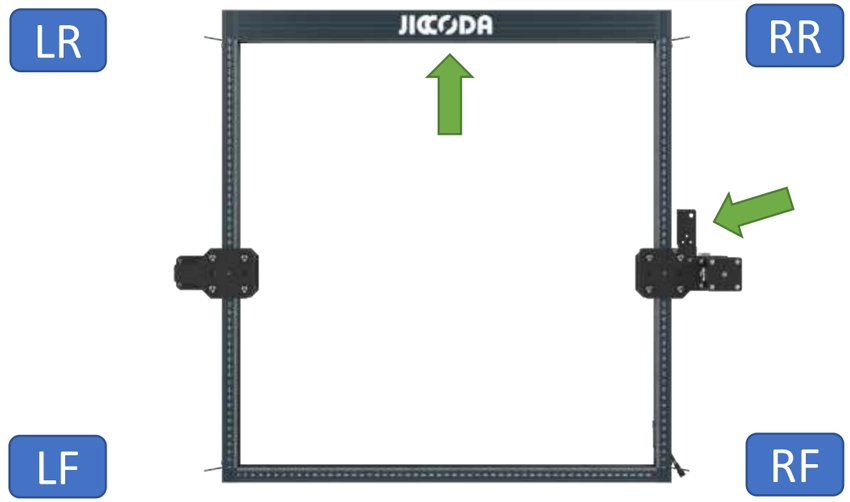


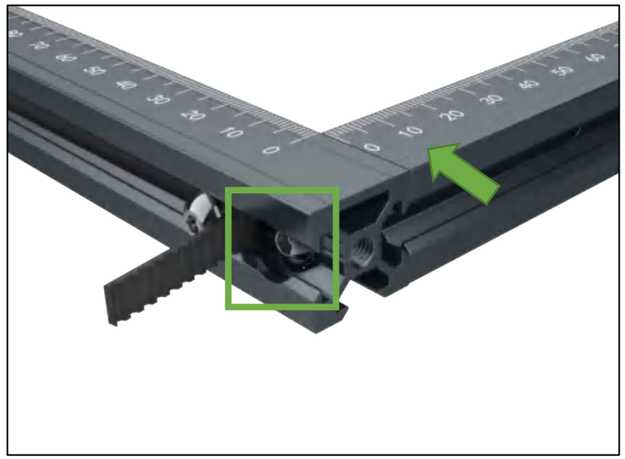

## Step 8

Parts Required:

- Assembly (Step 7) *1
- Frame Foot *3
- M5x8 Screws *3
- M5x20 Screws *3

The screws for fixing to the left and right rails are M5x8

The screws fixing the front and rear rails are M5x20

Note: If there is a lot of resistance to screwing, you need to loosen the screws from the previous step before proceeding. Install the frame feet and then tighten the frame screws.

JICCODA

**Step 9**

Parts Required:

- Assembly (Step 8) *1
- Control Board *1
- M5x8 Screws *1
- M5x20 Screws *1

The screw fixed to the right rail is M5x8
The screw fixed to the front rail is M5x20

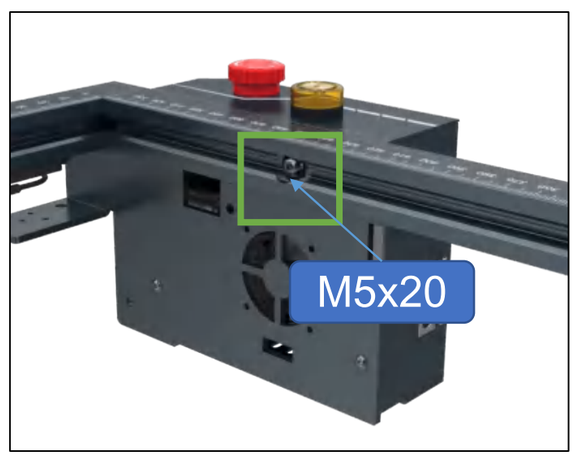


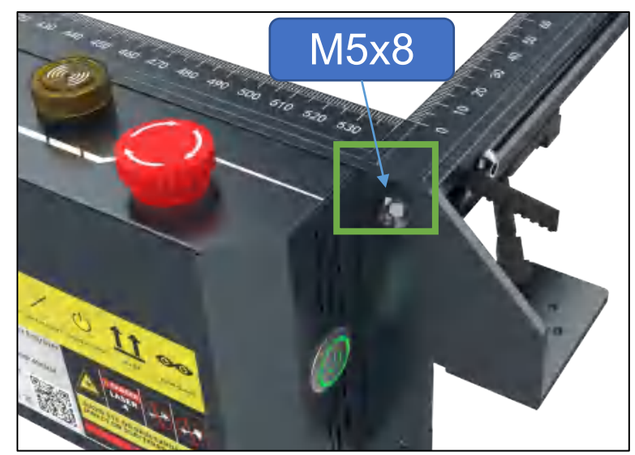


Wires included

**Step 10** 1/2

Parts Required:

- X Sliding Assembly *1
- X Drag Chain Bracket *1
- M3x6 Screws *3

X Drag Chain Bracket attached to X Sliding Assembly
Fix with M3x6 screws (as shown in the picture)

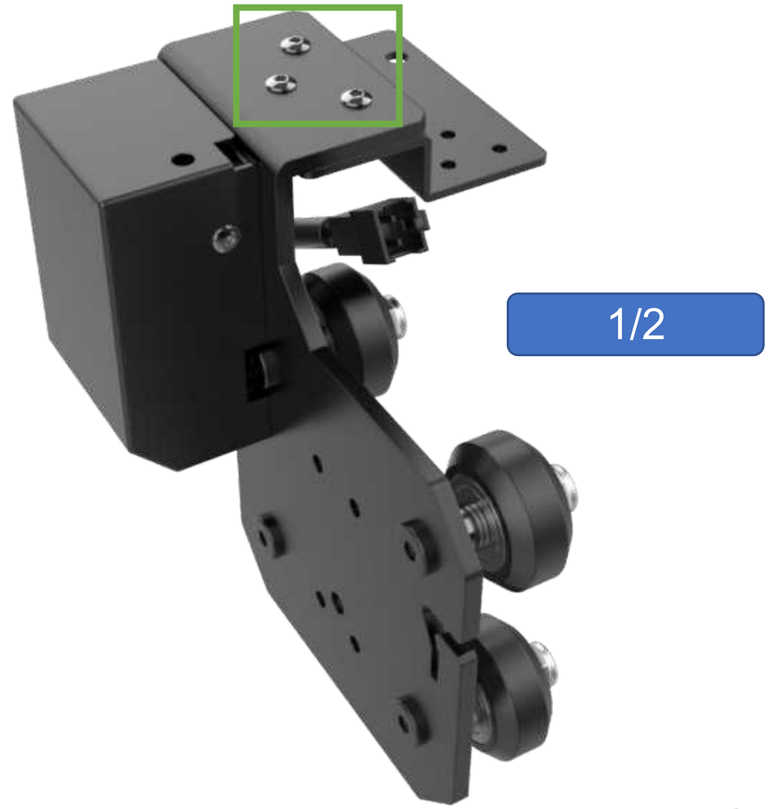


**Step 10** 2/2

Parts Required:

- Assembly (Step 10) *1
- Laser Module*1
- M3x8 Screws *4

Laser Module attached to Assembly (Step 10)
Fix with M3x8 screws (as shown in the picture)

Note the direction of installation

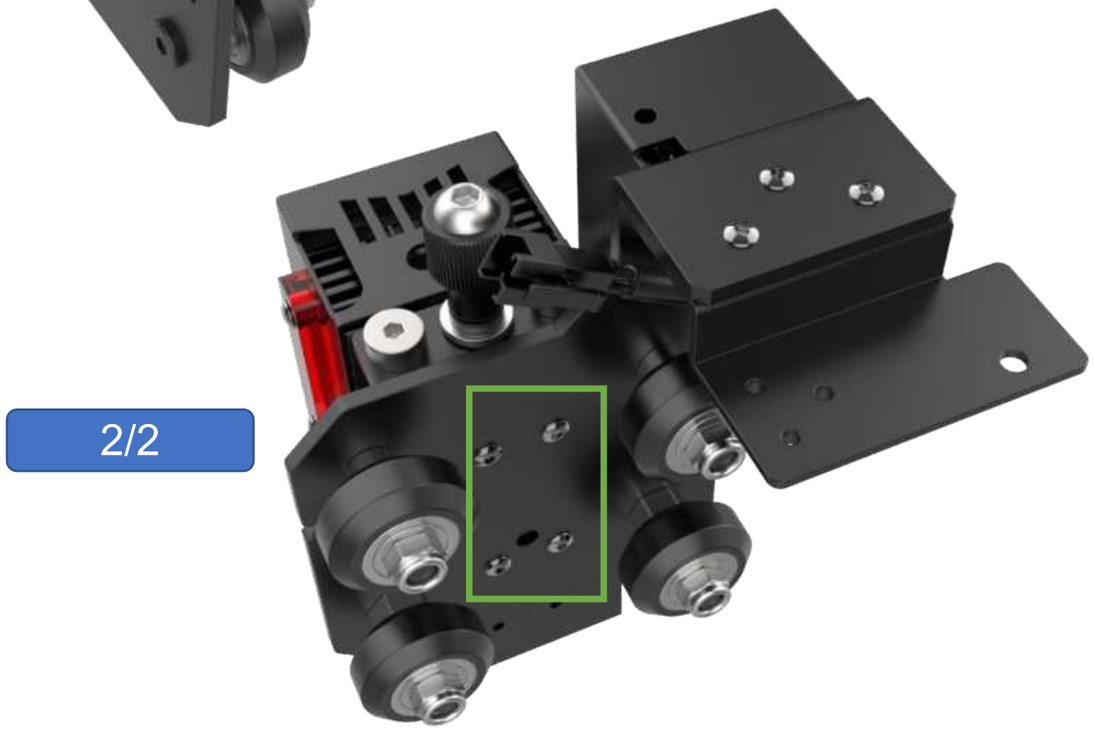

**Step 11** 1/2

Parts Required:

- Assembly (Step 10) *1
- X Rail *1

The motor cable goes through first, otherwise it will prevent the assembly from sliding in Assembly (Step 10) slides into the X Rail (as shown)

After sliding in, check the correct orientation, which can be identified by the shape of the hole and the shape of the motor (as shown)

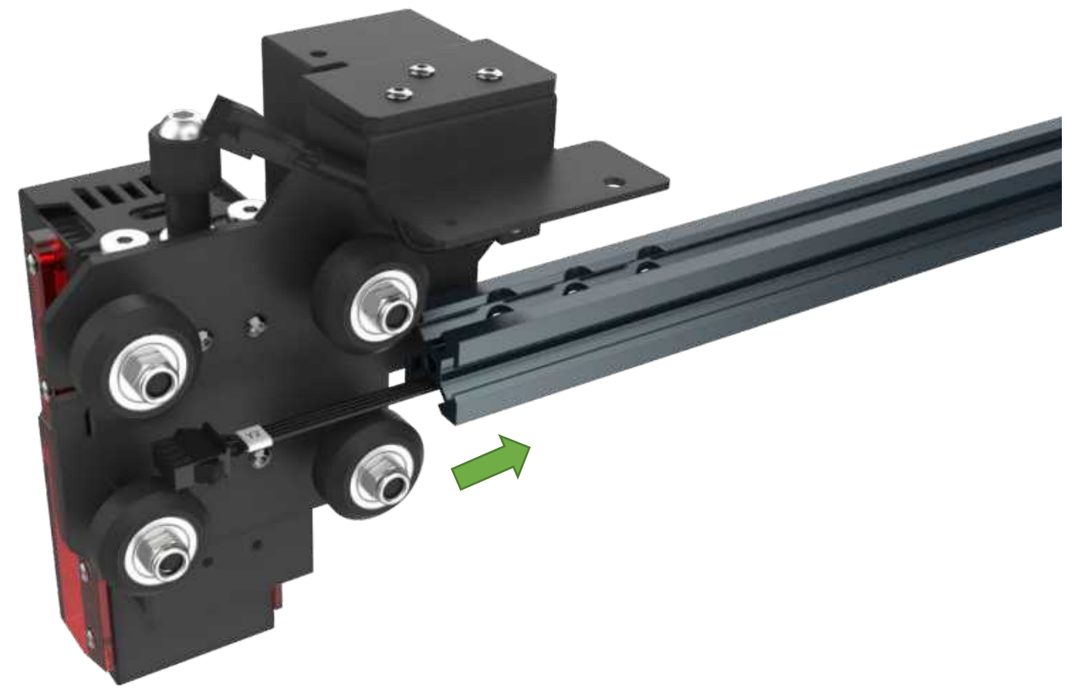

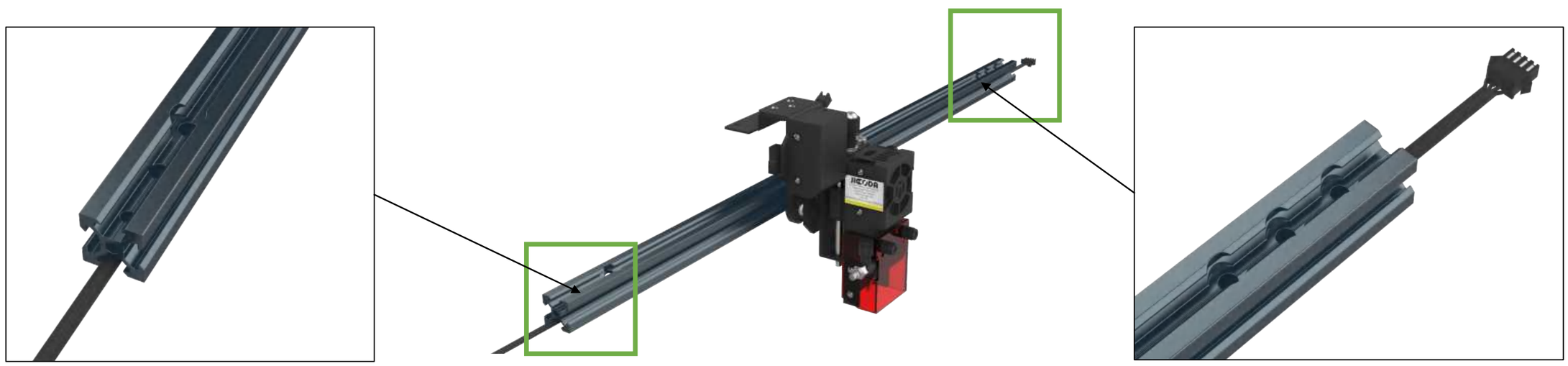

**Step 11** 2/2

Parts Required:

- Assembly (Step 11) *1

If the assembly is very loose in the Rail, use a hexagonal spanner to adjust the rollers as shown by the arrows in the picture.

Notes：
Optimum looseness: the POM wheels rub slightly against the guide rails as they turn.

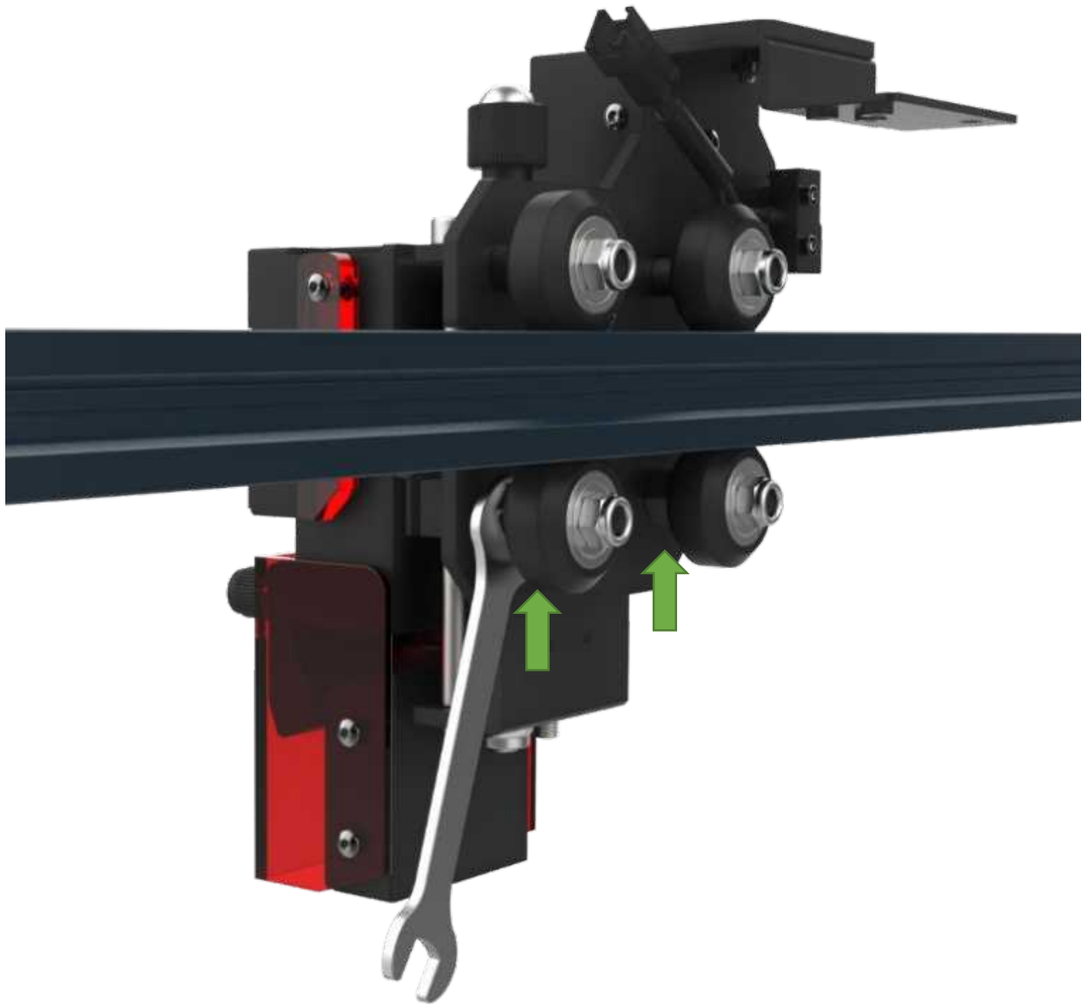

JICCODA

## Step 12

Parts Required:

- Assembly (Step 11) *1
- White Nylon Tubes 25 *2
- M5x55 Screw *1

White Nylon Tubes 25 length 2pcs stacked on the assembly with M5x55 screws (as shown)

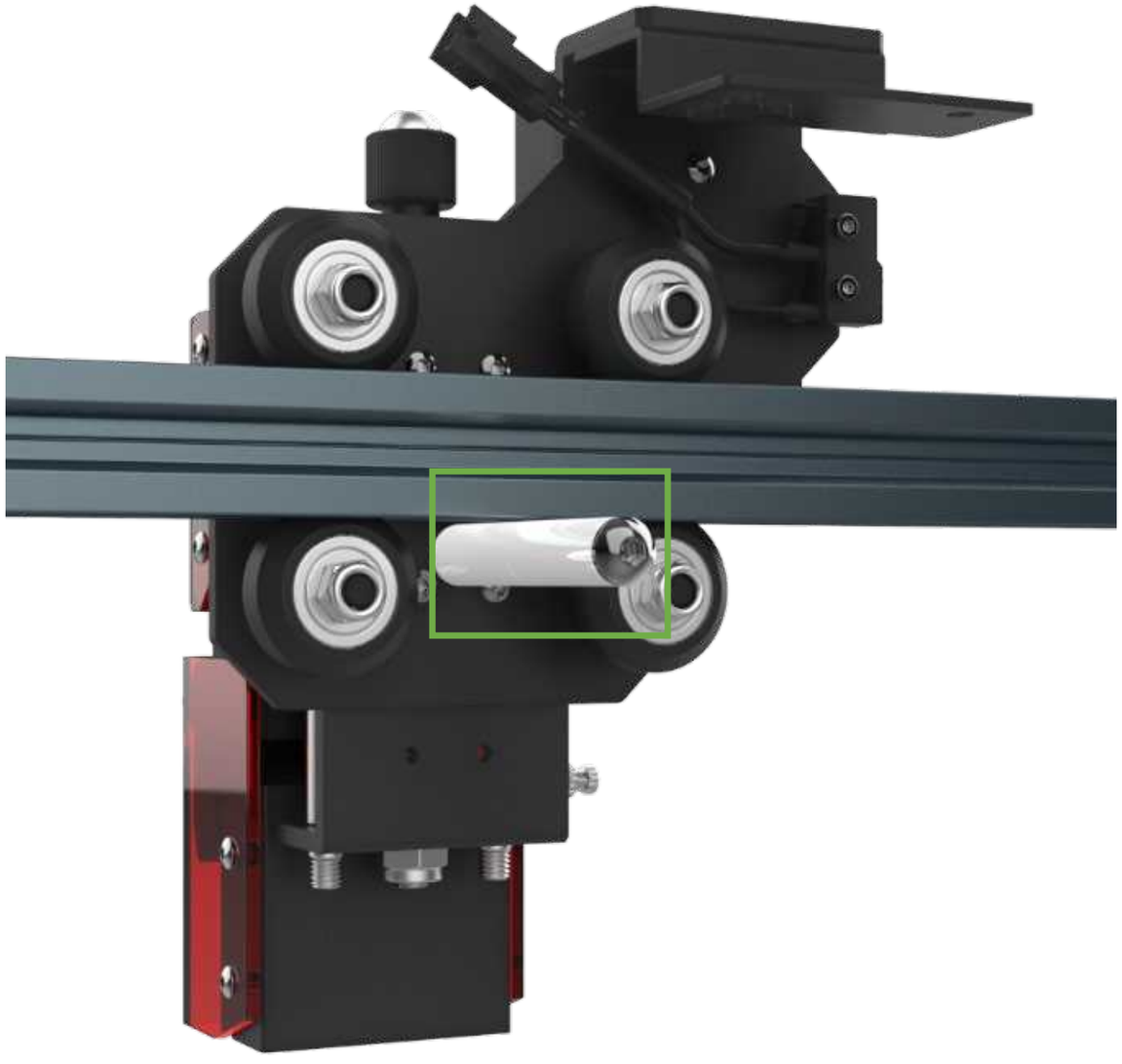

## Step 13

Parts Required:

- Assembly (Step 9) *1
- Assembly (Step 11) *1
- M5x18 Screws *4

Motor wires avoiding L motor assembly and R motor assembly (as shown in the picture)

Use M5x18 screws 4PCS to secure the L motor assembly and R motor assembly, do not tighten them yet.

Both the L motor assembly and R motor assembly are aligned with the 200 scale value, then tighten the M5x18 screws. (as shown in the diagram)

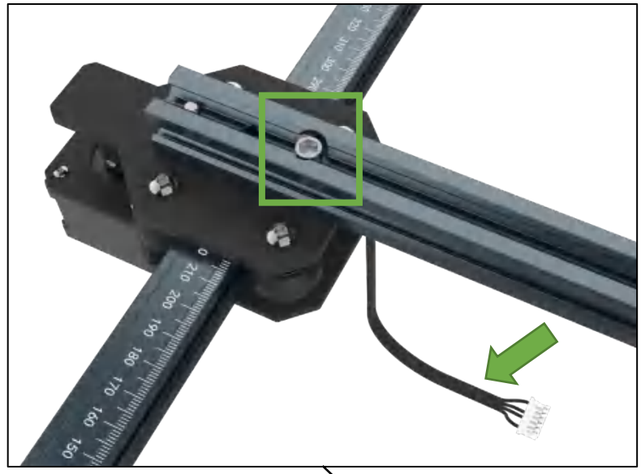

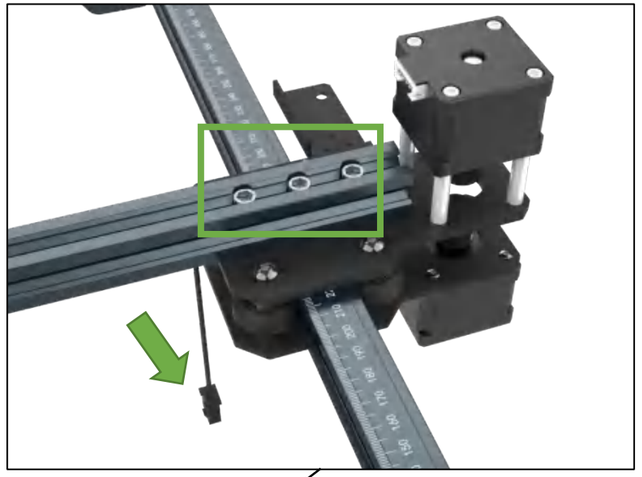

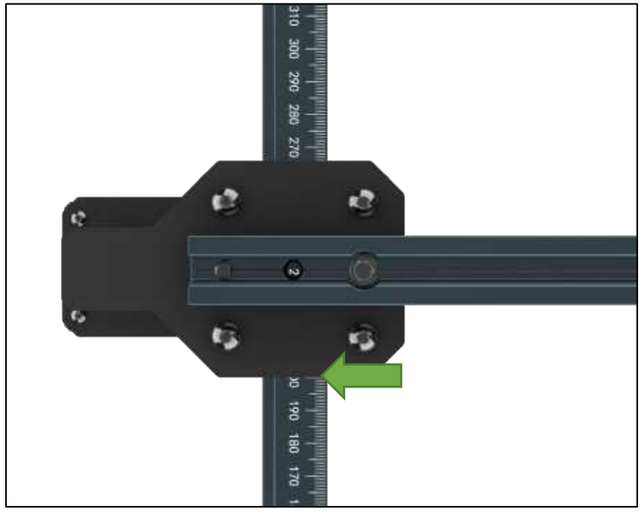

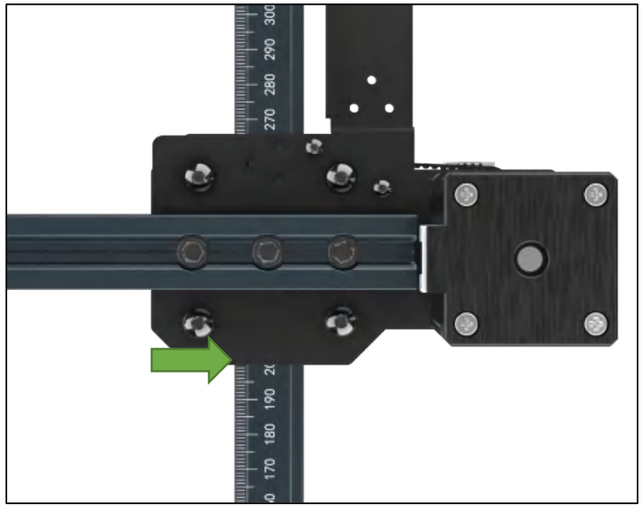

JICCODA

**Step 14**

Parts Required:

- Assembly (Step 13) *1
- X Endstop *1
- M5x25 Screws *1

X Enstop attached to the left end of the X-rail,
Fixed with M5x25 screws

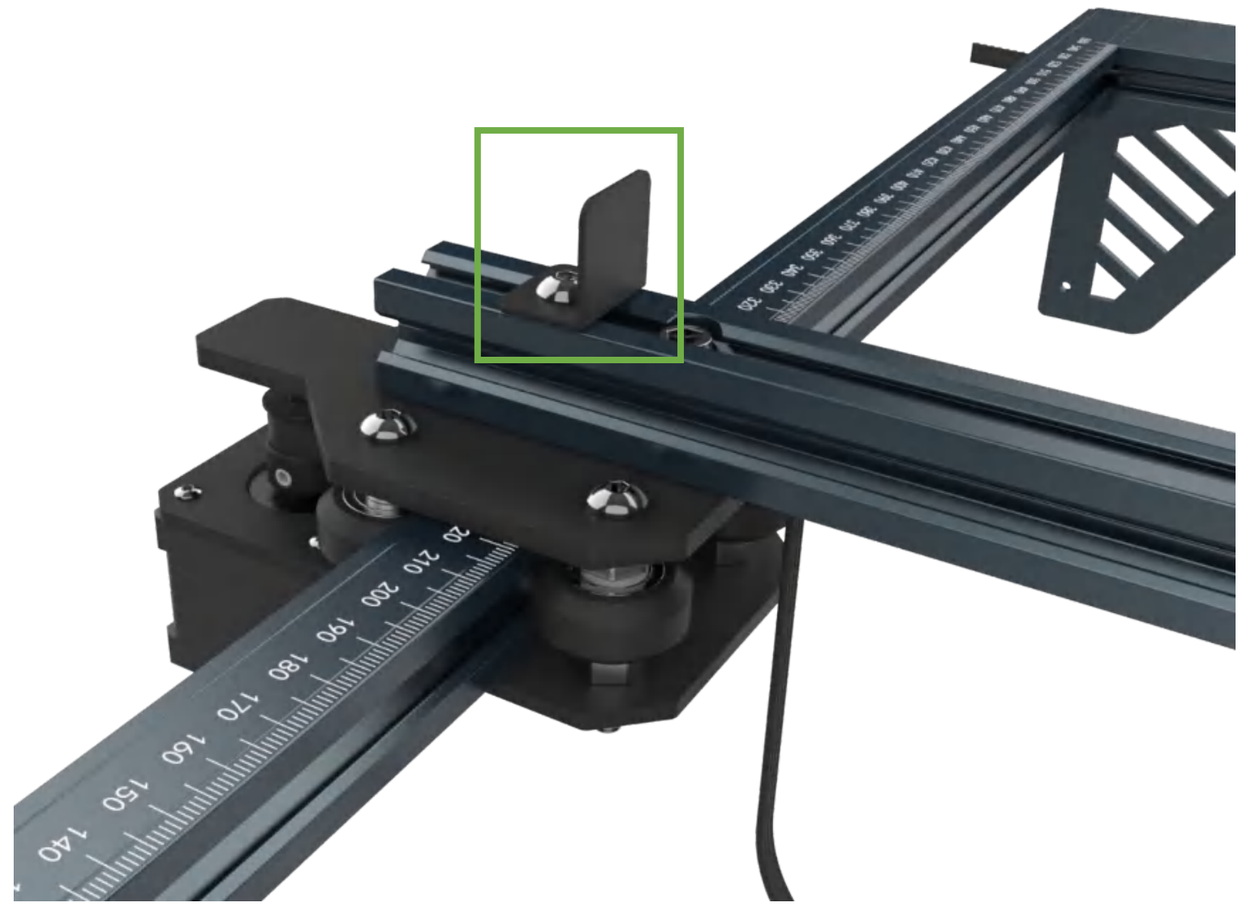

## Step 15

Parts Required:

- Assembly (Step 14) *1
- M5x18 Screw *1

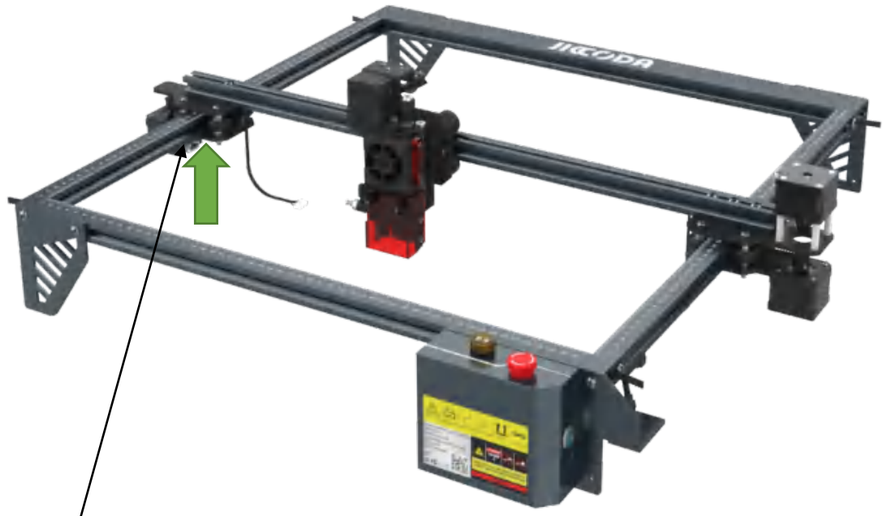

Through the hole in the L motor assembly
Use M5x18 screws to fix the L motor assembly and X Rail

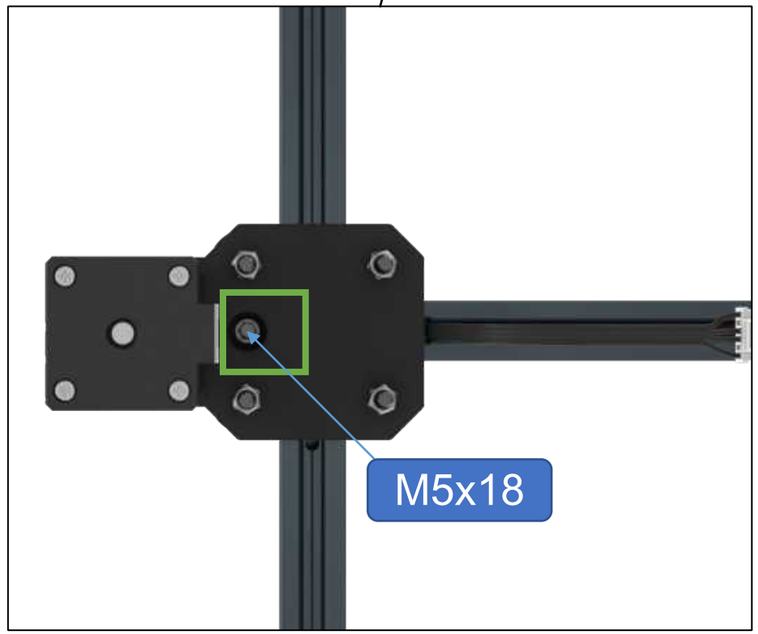


Plug the 6pin connector into the motor on the L motor assembly (Y2 mark)

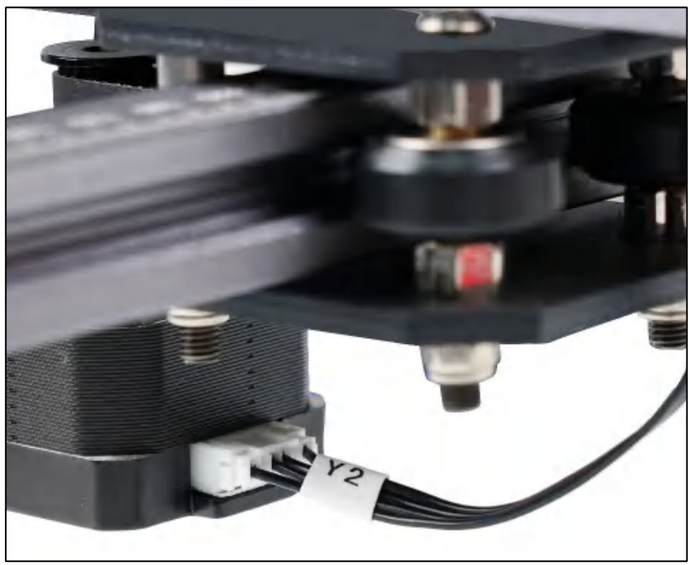

JICCODA

**Step 16** 1/2

Parts Required:

- Assembly (Step 14) *1
- Tensioner Assembly *1

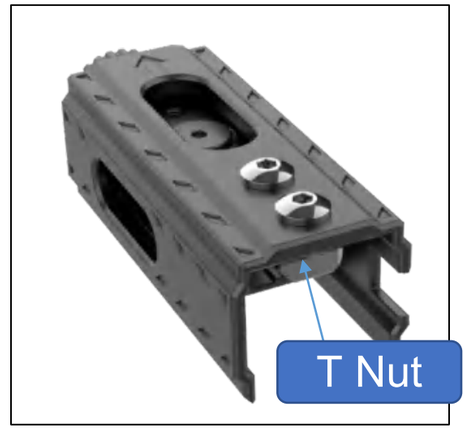


Before use, loosen the screws on the Tensioner Assembly so that the T-nut can just hold the X Rail guide.

If it does not fit into the slot, loosen the screw again and then tighten it again.

**Step 16** 2/2

Parts Required:

- Assembly (Step 15) *1
- X Synchronous Belts *1

One end of the X Synchronous Belts snaps into the slot on the X Sliding Assembly (as shown)

Place the timing belt in the order of 1 to 5
Finally, snap the other end of the timing belt into the X Sliding Assembly slot (see Fig. 5)
If point 5 is difficult to perform, adjust the tensioner in figure 4 (or refer to the next step)

X Synchronous Belts

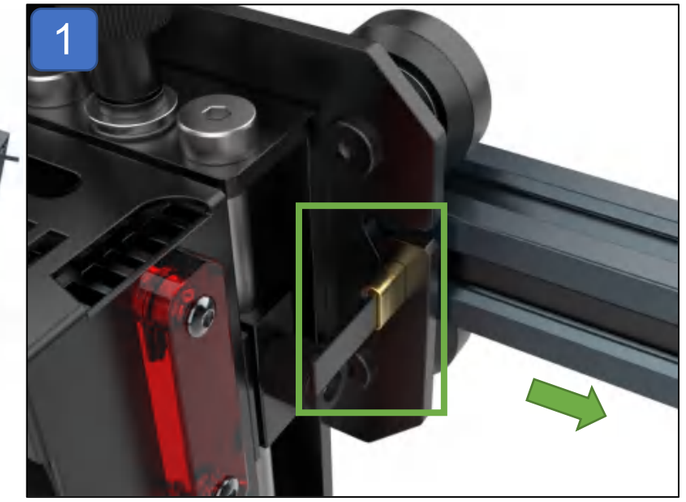

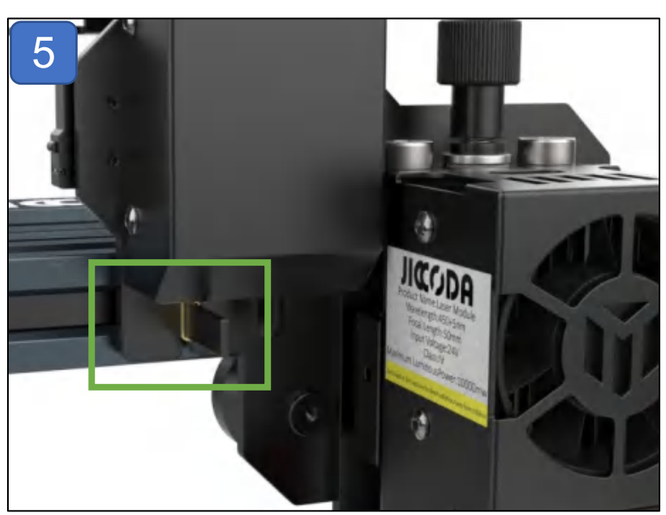

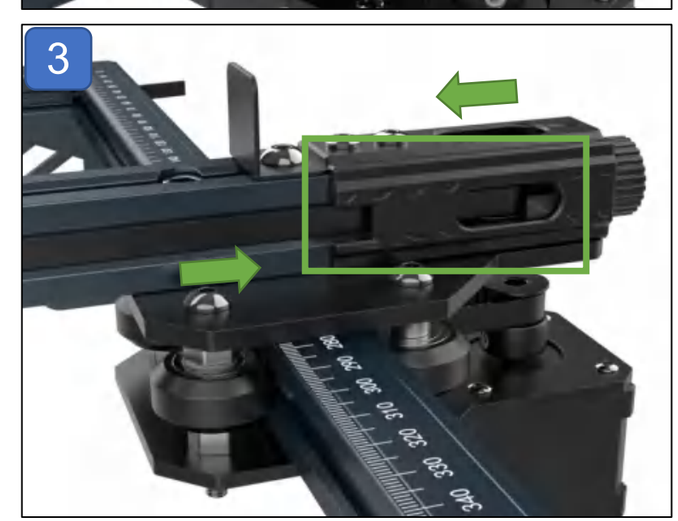

JICCODA

## Step 17

Parts Required:

- Assembly (Step 16) *1

When rotating clockwise, tension the timing belt

When rotating counterclockwise, loosen the timing belt

The timing belt needs only a little tension
Do not over tighten.

## Step 18

Parts Required:

- Assembly (Step 17) *1
- M3x6 Screws *6

One end of the drag chain is attached to the control board sub bracket and then fixed with screws M3x6

The other end of the drag chain is attached to the bracket of the R-motor assembly and fixed with M3x6 screws

Fix the drag chain with a cable tie

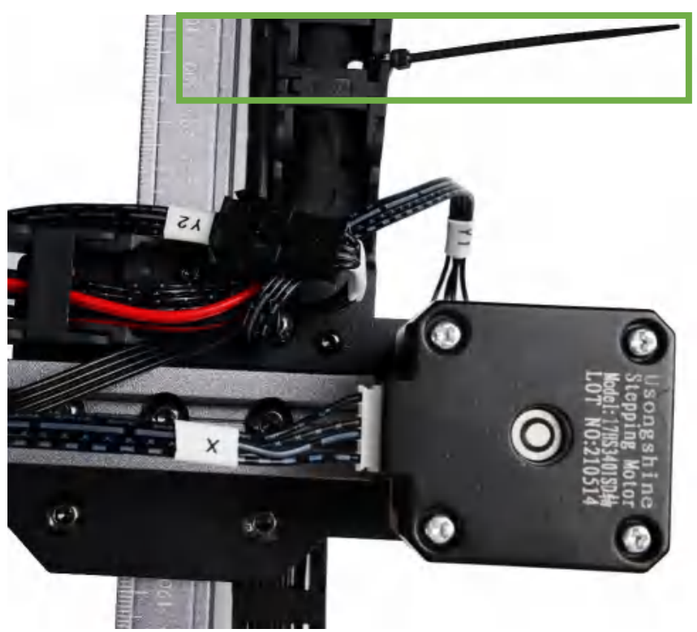


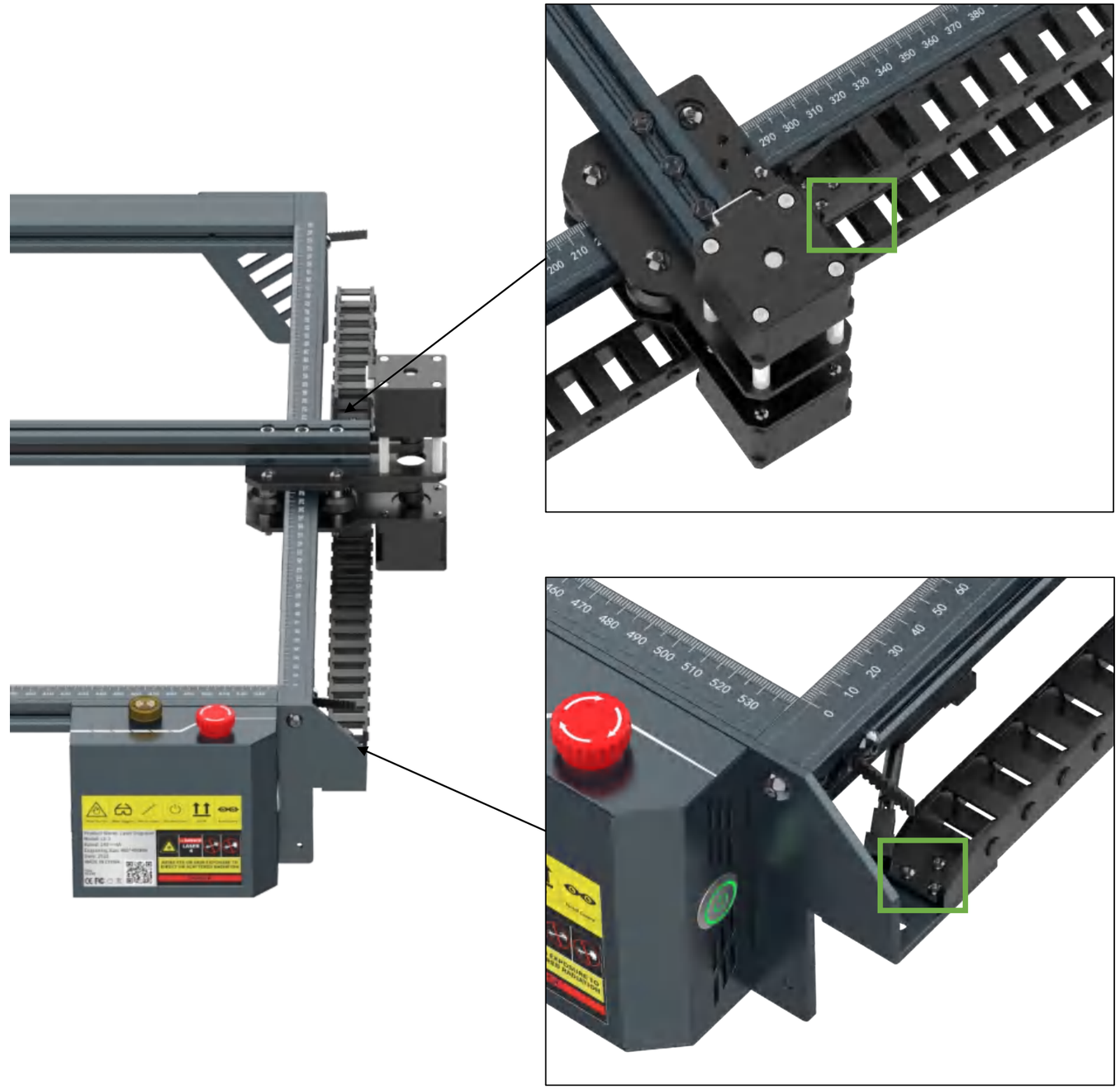

## Step 19

Parts Required:

- Assembly (Step 17) *1
- M3x6 Screws *3
- M3x8 Screws *3

One end of the drag chain is attached to the bracket of the R-motor assembly and fixed with screws M3x8

The other end of the drag chain is attached to X Drag Chain Bracket and fixed with M3x6 screws

Fix the drag chain with a cable tie

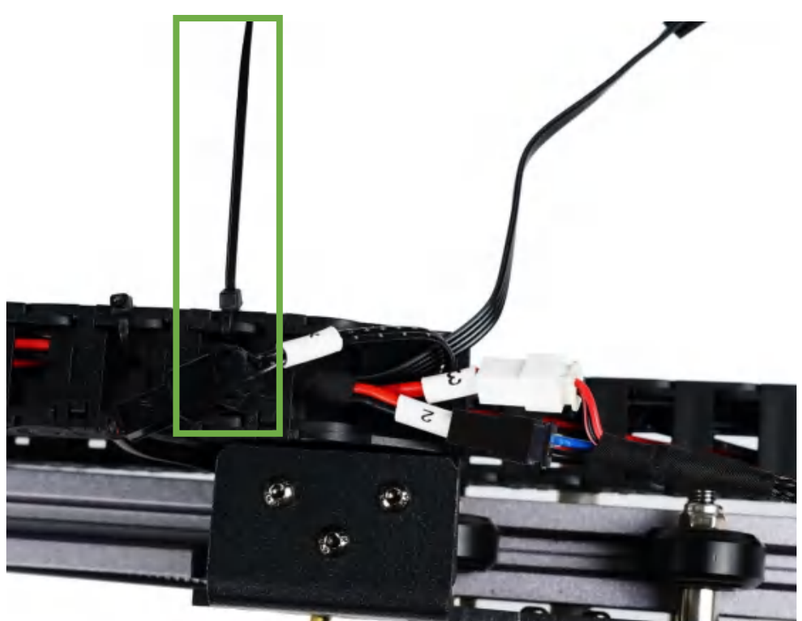

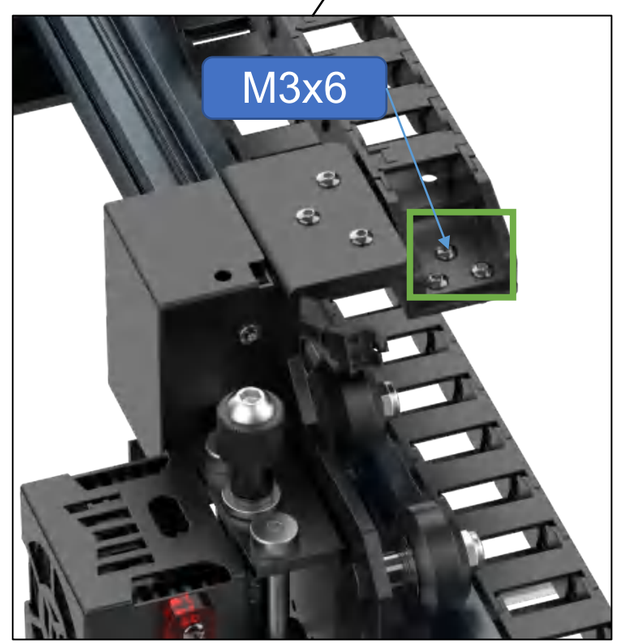


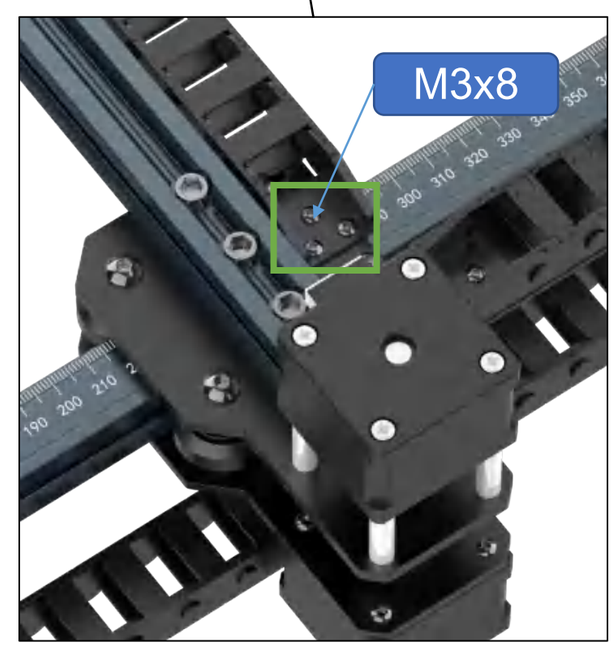

## Step 20

Parts Required:

- Assembly (Step 19) *1
- Y Drag Chain Support *1
- M5x8 Screws *2

Y Drag Chain Support is attached to the Bottom of the R-motor assembly and fixed with screws M5x8

The first hole on Y Drag Chain Support is not used ( Near the bending edge )

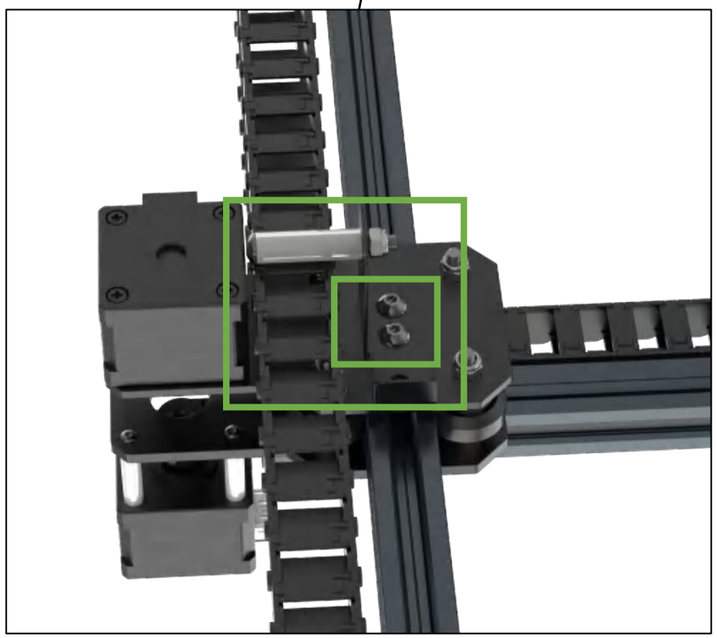

JICODA

**Step 21**

Parts Required:

- Assembly (Step 20) *1

The air supply hose is inserted into this regulating valve (as shown)

How to change the airflow
When rotating clockwise, the airflow becomes smaller
When rotating counterclockwise, the airflow becomes larger

The other end of the air hose needs to be connected to the air pump in order to use the blowing function.

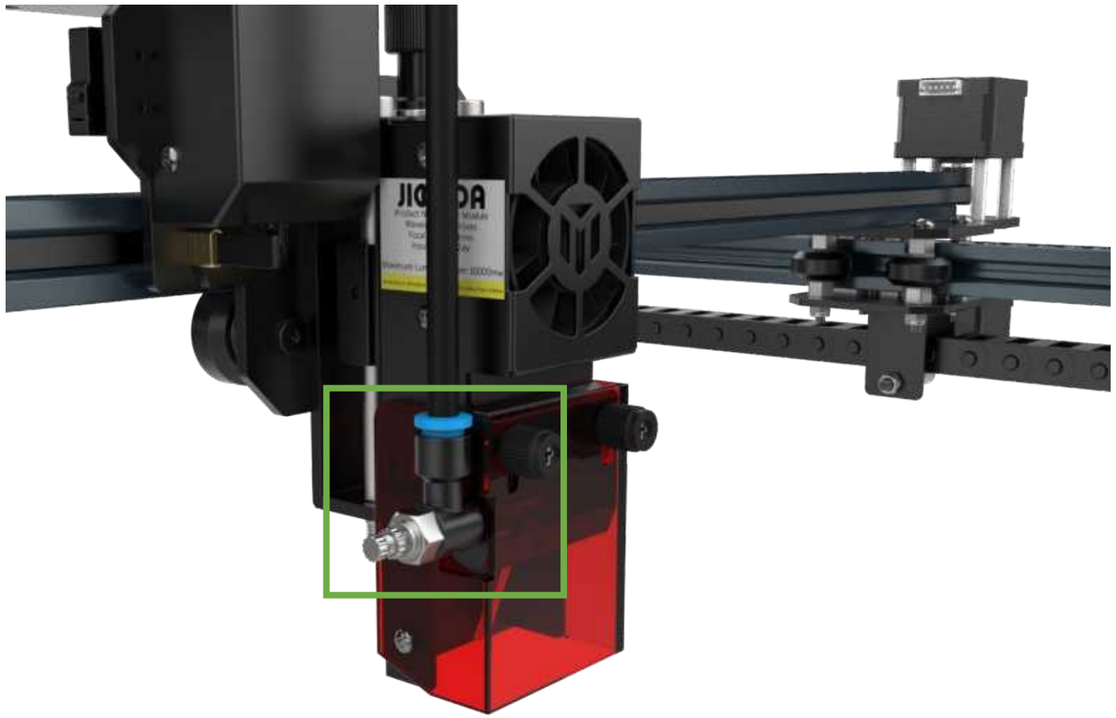

## Step 22

### How to connect the wires

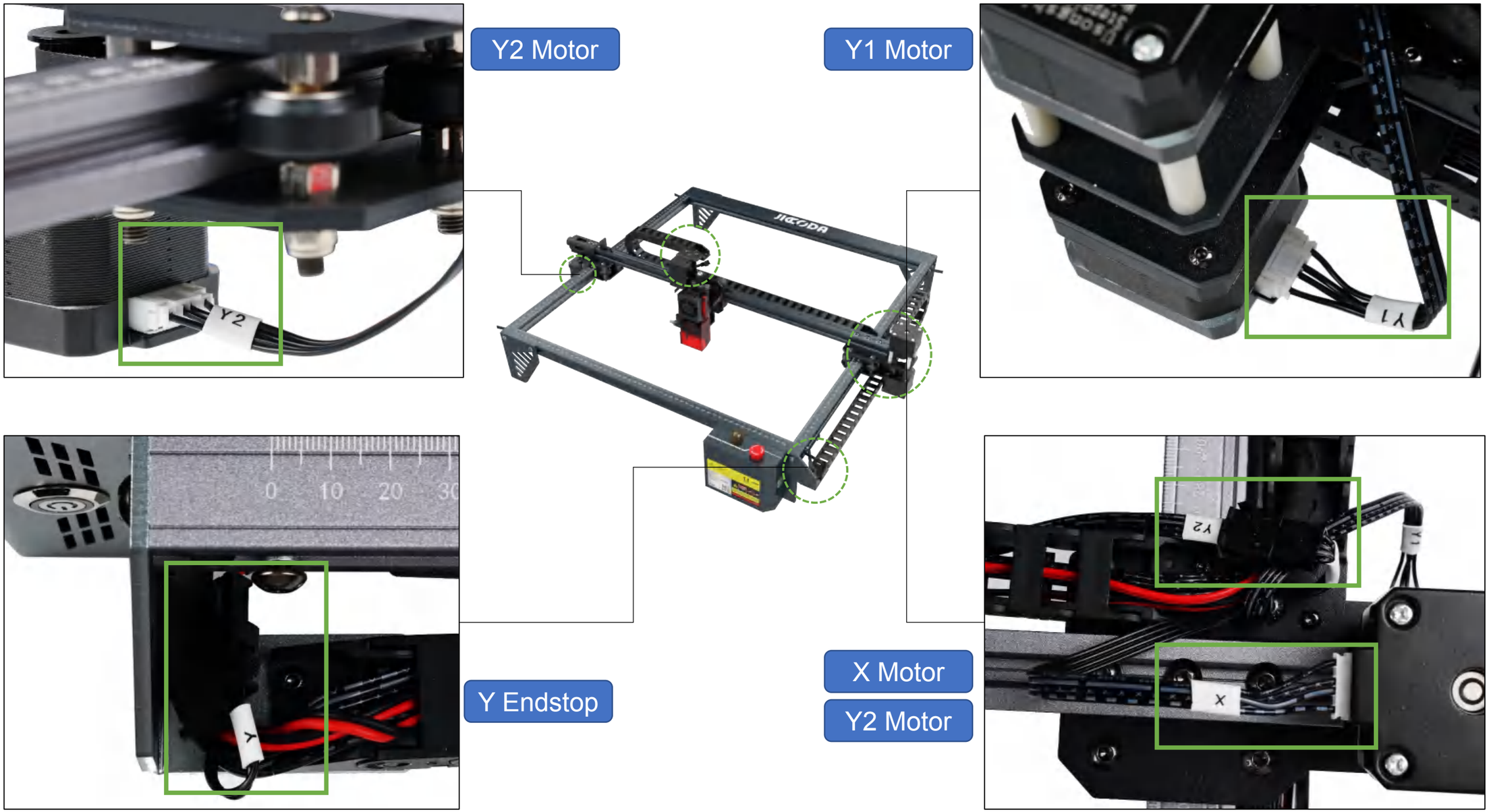

JICCODA

## Step 22

### How to connect the wires

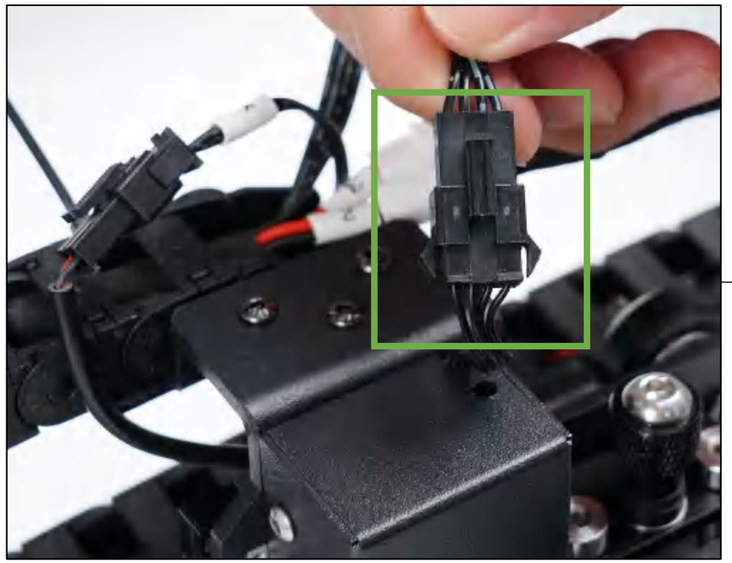

Flame monitoring

Fan

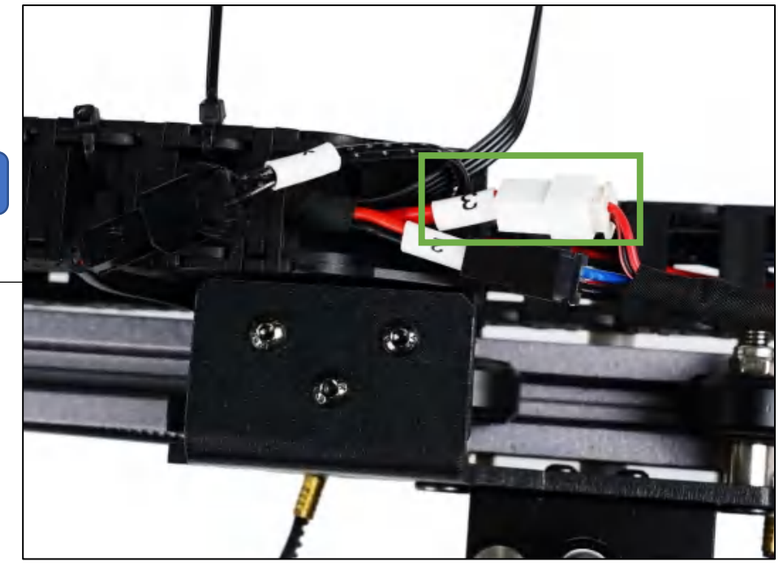

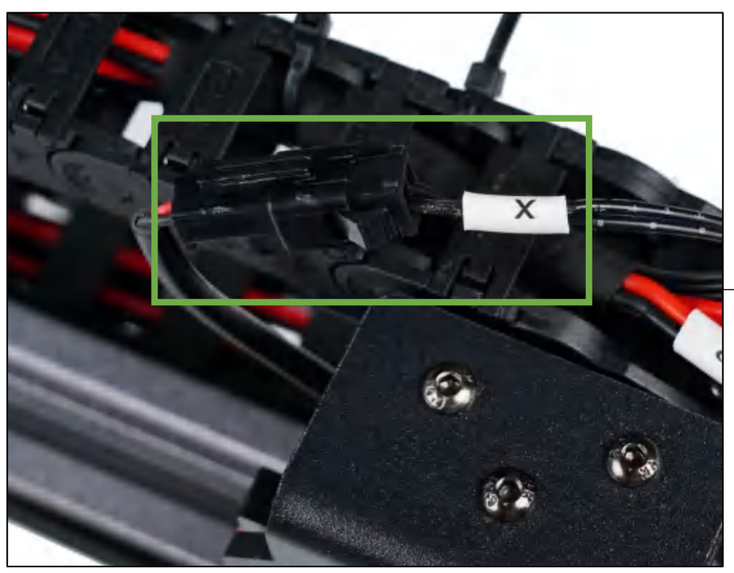


X Endstop

Laser

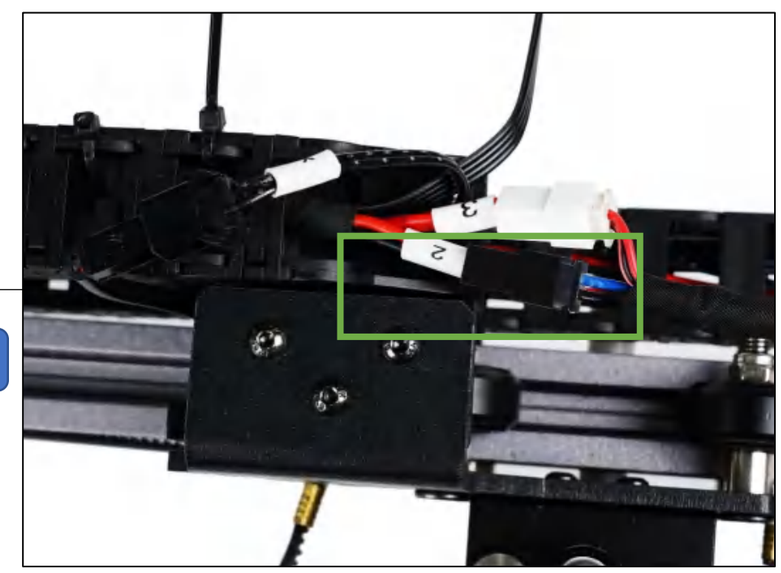

**Step 23**

## Introduction to the control board

How to enable the machine：

- DC power socket connected to DC 24V power supply
- Press the power switch
- Turn the emergency stop switch clockwise and let it pop up
- Connect the control board and PC port via USB transfer cable

When using APP or WEB control to engrave, a TF card needs to be inserted into the TK card slot for engraving program storage.

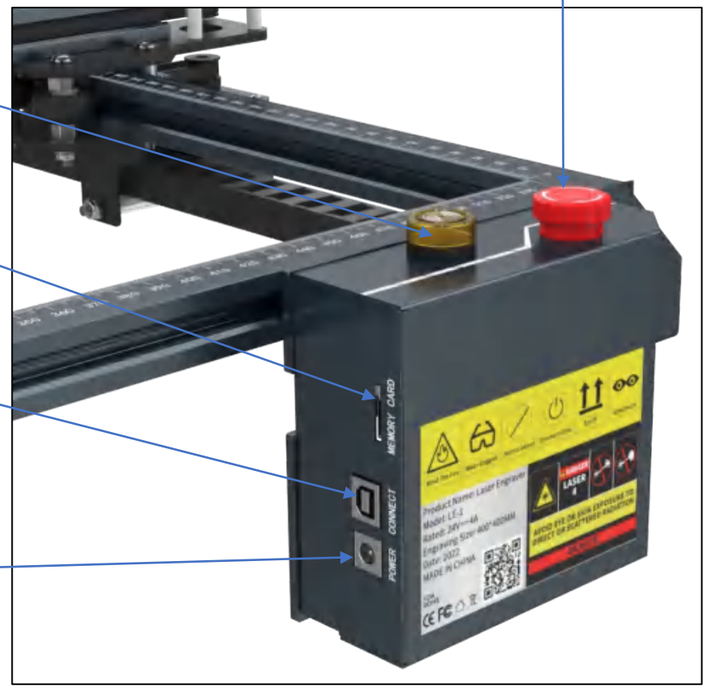

JICCODA

Step 24

## How to position the focus

- The engraved object is placed under the laser module
- The bottom of the measuring tool is in contact with the surface of the engraving object
- Turn the knob on the bottom of the laser module to control the rise or fall of the laser module (as shown)
- When the scale of the measuring tool is aligned with the reference line, this is the focus position.
- When engraving, the scale "0" line is aligned with the "reference line"
- When cutting 4mm objects, the scale “4" is aligned with the "reference line"

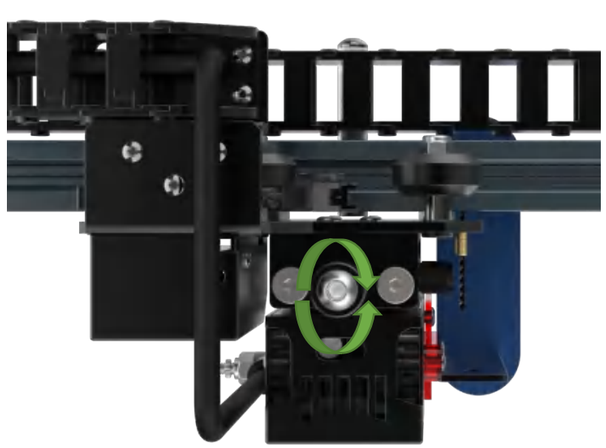

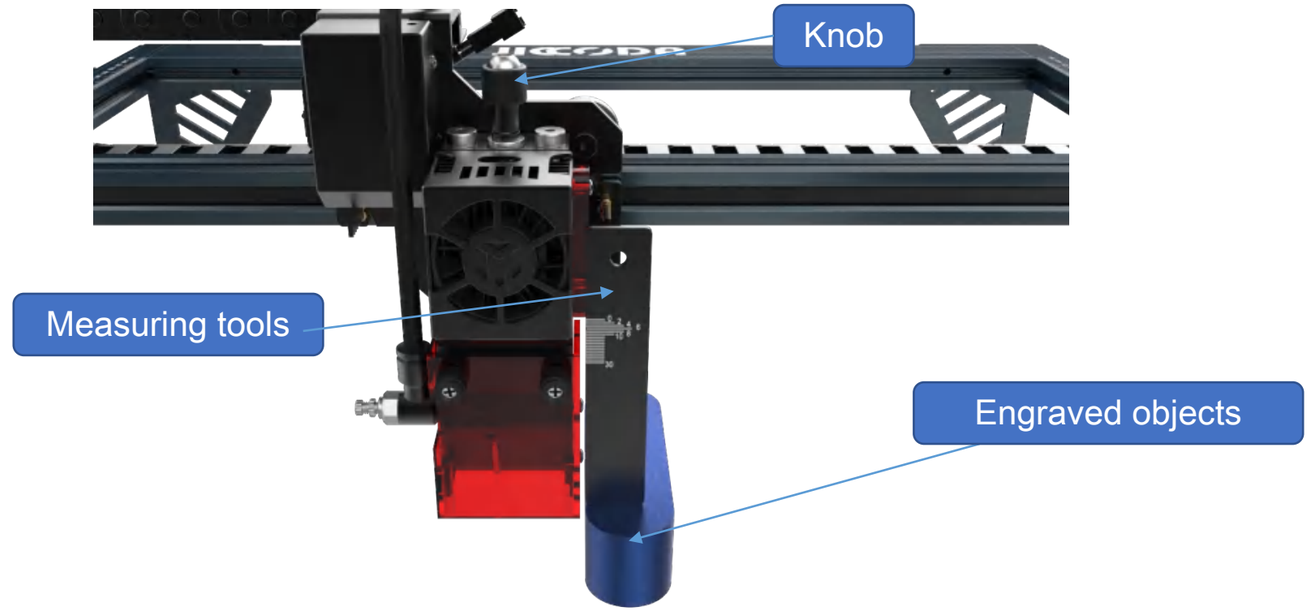


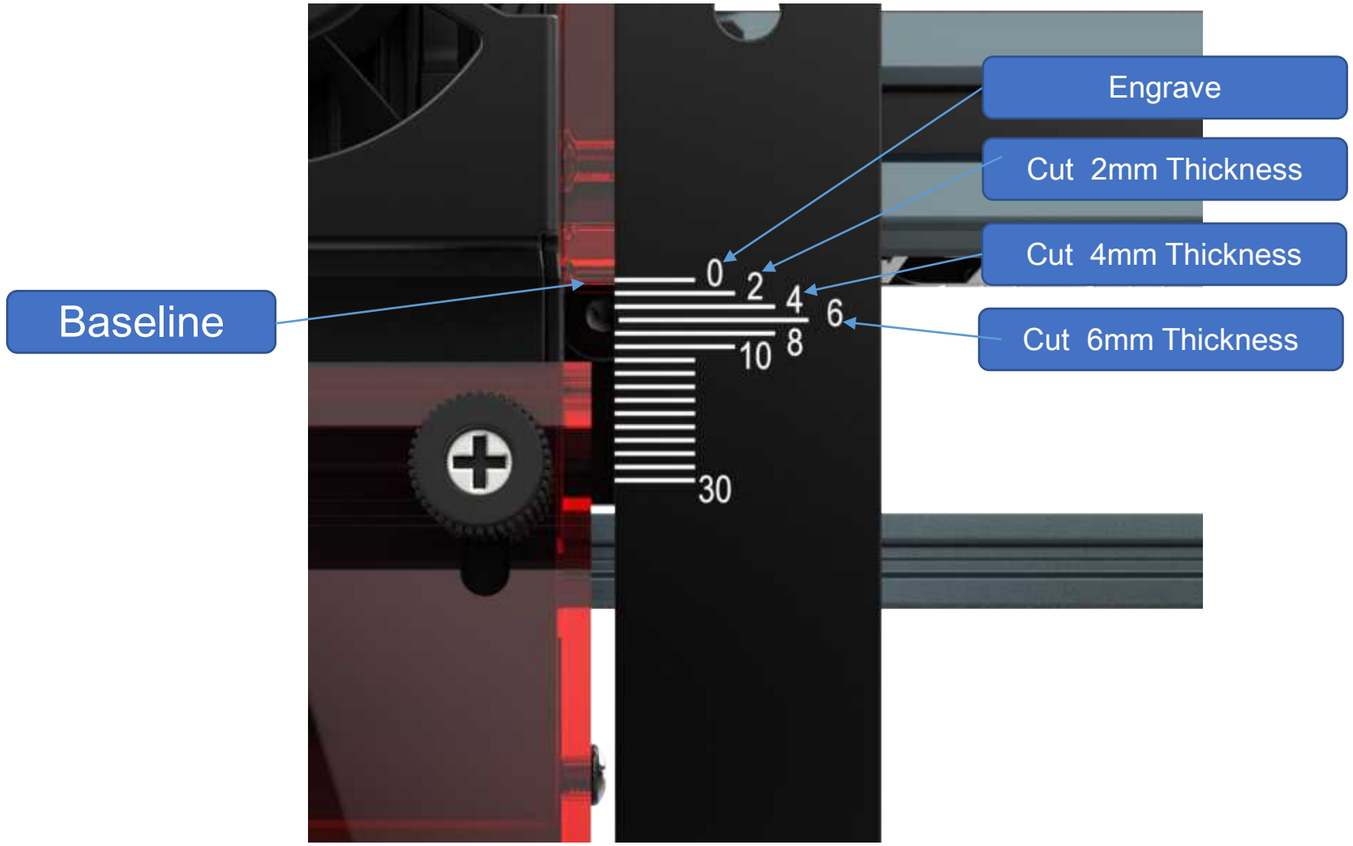

**Step 25**

## How to fix to a table

Parts Required:

- L-angle bracket *4
- M4x8 Screws *8

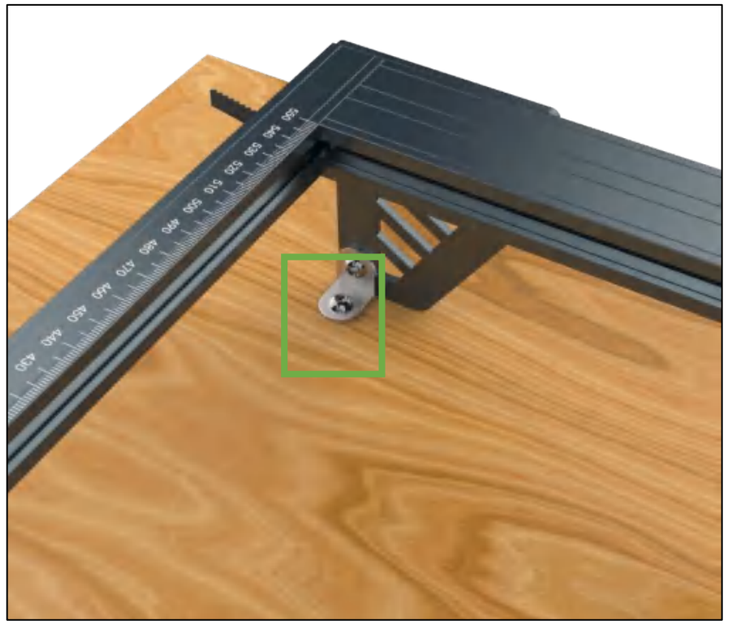

4 feet

## Driver installation

Method 1. Click the "Tools" on menu bar to install the CH340 driver (this function is not available in some versions of the software);

Method 2. Copy file of "CH340SER.EXE"  from TF card (USB flash disk) to computer and install;

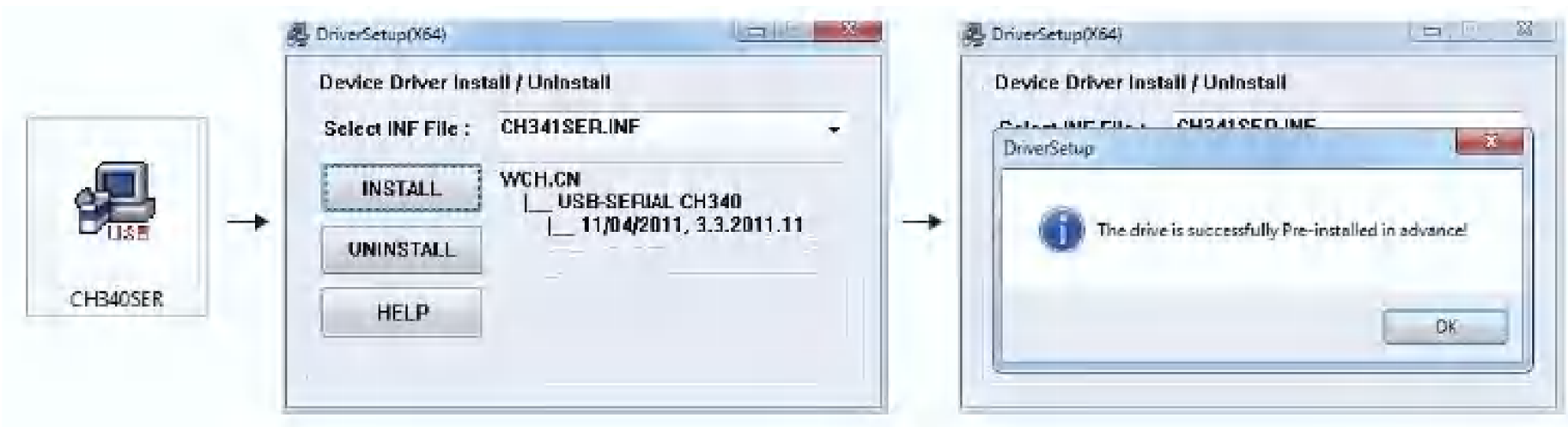


**Note: if it is a MAC system, install the corresponding driver, and there is a Mac driver in the TF Card;**

**Software Downloading**

LaserGRBL is one of the most popular DIY laser engraving software, which can be downloaded in LaserGRBL website http://lasergrbl.com/download/(The installation package is also available on the TF card from the manufacturer or USB flash disk).
Brief introduction: LaserGRBL is an open source, easy-to-use and powerful software. Unfortunately, LaserGRBL only supports Windows system (Win XP/Win 7 / Win 8 / XP/Win 10).
For Mac users, you can also choose LightBurn, which is also a very good engraving software, but it's not free. The software also supports Windows system.
Note: The engraving machine needs to be connected with the computer during engraving, and the software of the engraving machine cannot be turned off.

## 1.Software Installation

Insert the TF card into the computer and complete the installing the lightGRBL software.

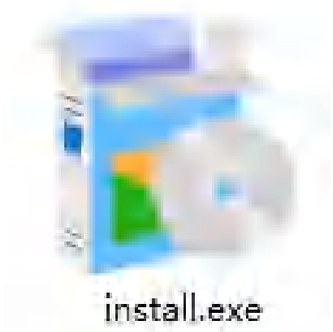


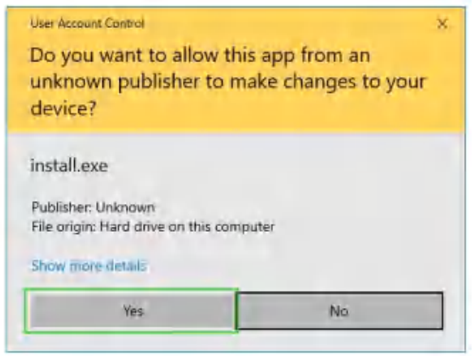


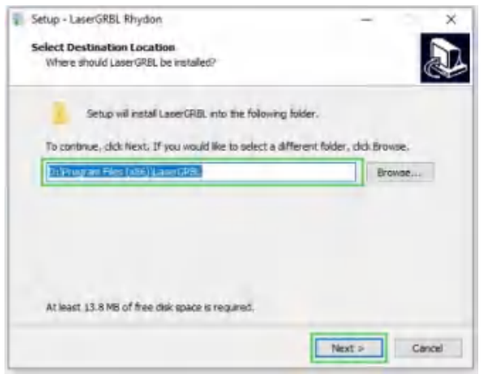


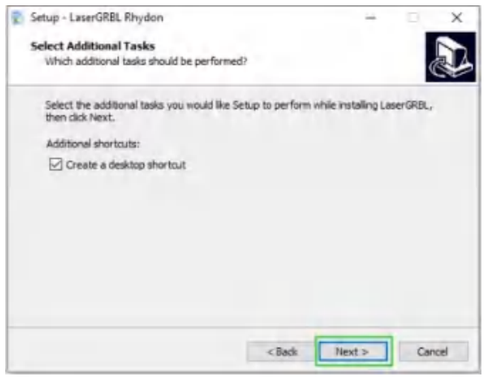


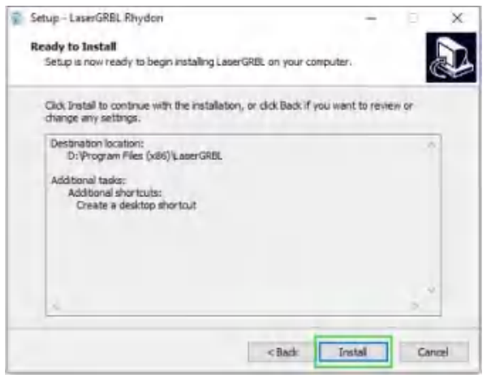


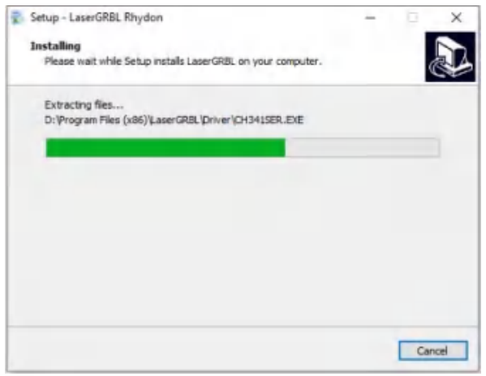

## 2. Installation Package for Custom Button

We recommended LaserGRBL using custom button,and can get it from our TF card.

### 2.1 How to download

**Custom Button software**

Step 1: Click the blank space of the bottom (as shown in figure 3.2)

Step 2: choose " import custom button", and then select the package for custom button obtained before and the custom button zip can be imported. Press (Y) until no window pops up to complete the installation of the custom button.

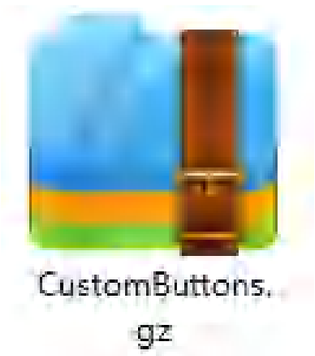


**Figure 3.1 Installation Package for Custom Button**

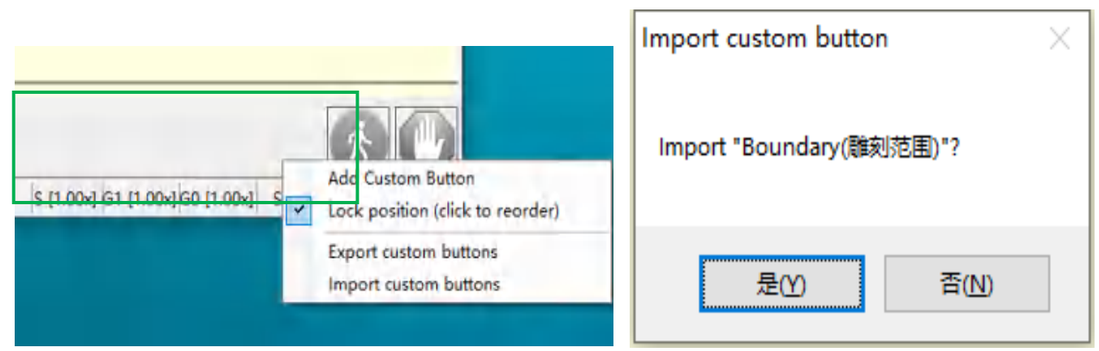


**Figure 3.2 How to add**

**Introduction of button function**

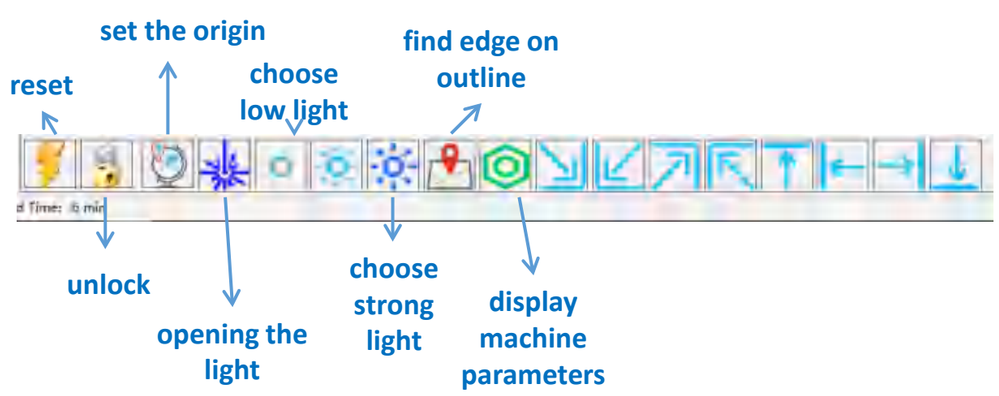

## 3. Connect Laser Engraving Machine

Step 1: Using USB data cable to connect the laser engraver to a computer with LaserGRBL software installed
Step 2: turn on the laser engraving machine.
Step 3: turn on the LaserGRBL software in the computer.
Step 4: Select the correct port number and baud rate in the software - 115200 ( figure 4.4 ) (in general, the COM needn't be chosen manually, but if you have multiple serial devices, you'll need to select them manually when connecting to the computer. The port of the laser engraving machine can be found in the Device Manager on Windows. An easier way is to try each port number displayed).
Step 5: Click the lightning connection sign. Note: When the lightning sign turns to red X and the direction sign litup means the connection is successful. (Figure 4.5)

**Figure 4.2**

**Figure 4.5**

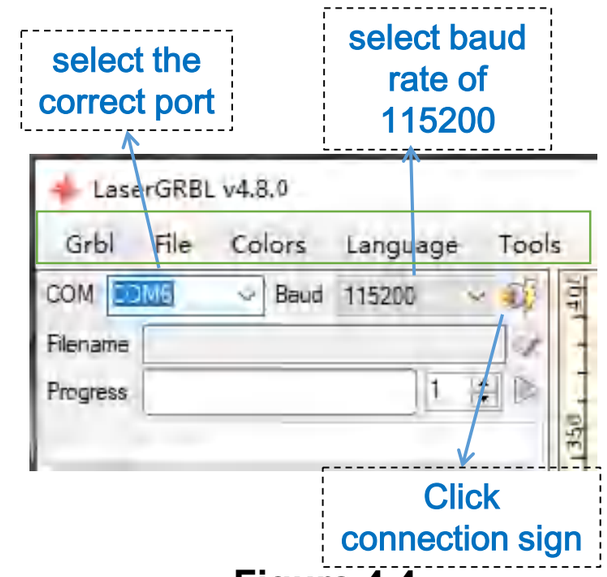


**Figure 4.4**

## 4. UpLoad Engraving File

Step1:Click "file" and "open file" in turn, as shown in figure 8.1, and then select the graph you want to engrave. Currently, LaserGRBL supports files in the formats of NC, BMP, JPG, PNG, DXF, etc.

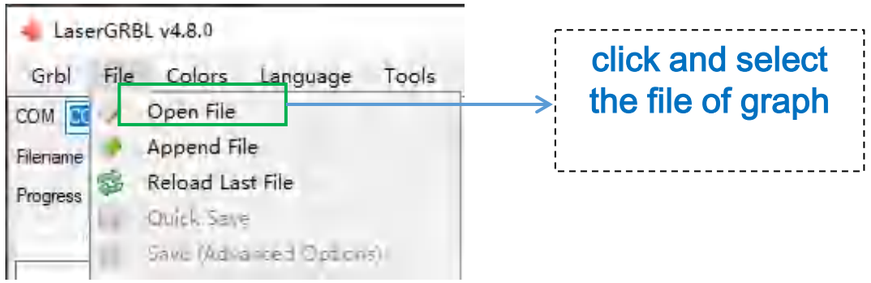


**Figure 5.1**

Step2: Set the picture parameters, engraving mode and engraving quality.

LaserGRBL can adjust and preview the clarity, brightness, contrast, highlights and other attributes of the target graphics. which is also can be rotated ,Mirroring, cutted, etc at the bottom of window during the adjustment process.

In the engraving mode, usually we selected"Line-to-Line Tracking" and "1-bit dithering" mode,and "1-bit dithering" is more suitable for engraving grayscale graphics. If cutting is required, please select the engraving mode of "Vector" or "Centerline".

Engraving quality essentially refers to the line width of laser scanning.This parameter mainly depends on the size of the laser spot of the engraving machine; The recommended engraving quality range is 12-15. Different materials have different reactions to laser irradiation, so the specific value depends on the specific engraving material

After completing the above settings, click next to enter the settings of engraving speed, engraving energy, and engraving size

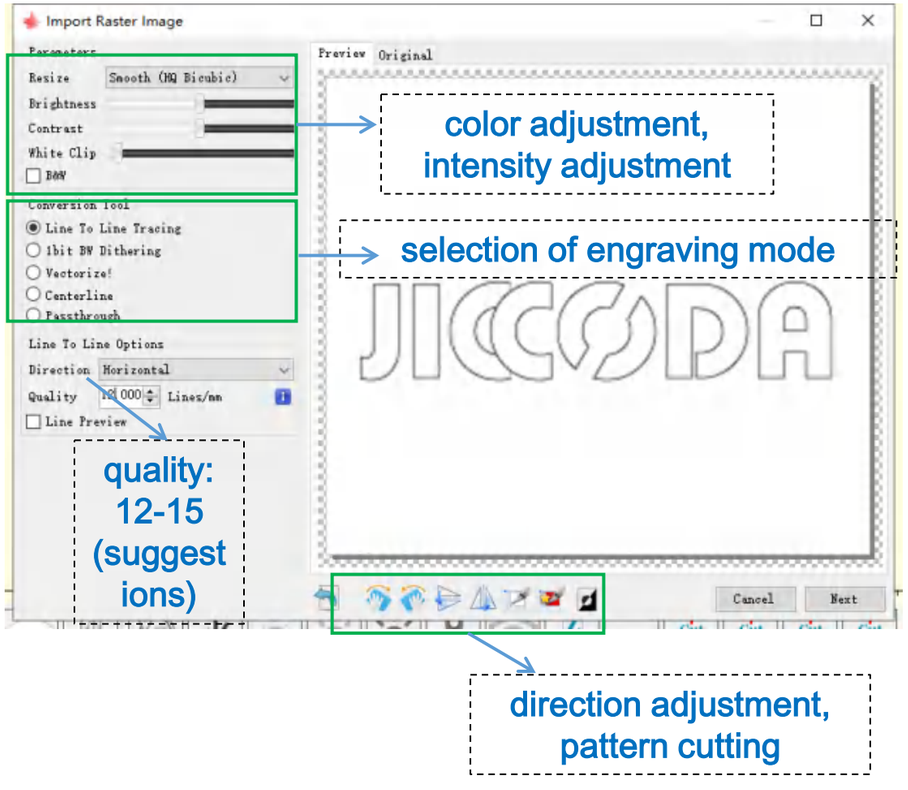


**Figure 5.2**

Step3: Set engraving speed, energy and size.

The JICCODA LE-1 laser engraver can reach a speed of up to 10,000mm/min. You can of course increase or decrease this speed according to your preference. Choose different speeds to have different engraving results. Faster engraving speed can save time but reduce engraving effect, slower speed needs more engraving time but better engraving effect. Adjust the speed to engrave what you want.

Please choose different engraving speed according to different materials. Finally, set the size to be engraved and click "Create" button to finish setting all engraving parameters.

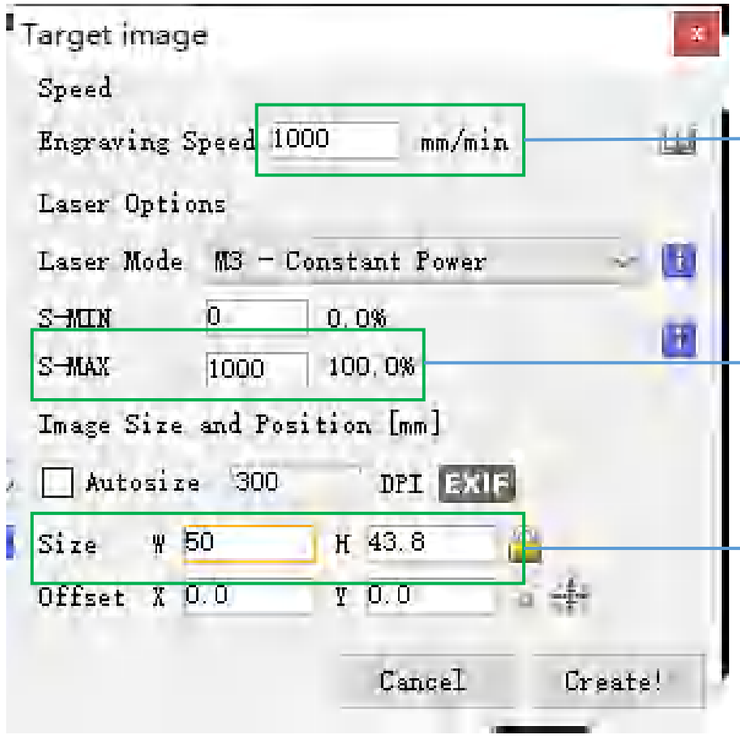


The default engraving speed is 1000 and can be adjusted as required

setting of energy value. improper energy will affect the engraving effect

enter the size of the graph you want to engrave

Note: When cutting, choose the M3 mode

## 5.Position (set the origin)

The purpose of positioning: the engraving pattern to be carved in the correct position of the object to be engraved.

Step1: By clicking on the orientation button (Figure 6.1), moving the X/Y axis, the laser device is positioned to the appropriate position of the object to be engraved.

Step2: Click the "Set Origin G92" button to set the origin position (that is, the lower left position of the pattern outline), as shown in (Figure 6.2)

Step3: Click the "Boundary Engraving Range" button (Figure 6.3), the laser device of the engraving machine will automatically turn on the shimmer and look for the edge according to the set pattern engraving size.

Used to observe whether the current origin position is appropriate; If it is not suitable, the laser head is moved again to reset the

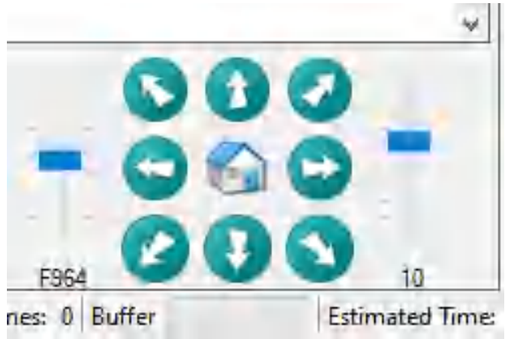


Figure 6.1

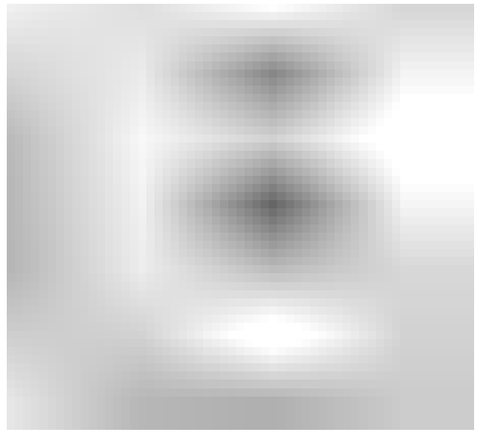

Figure 6.3

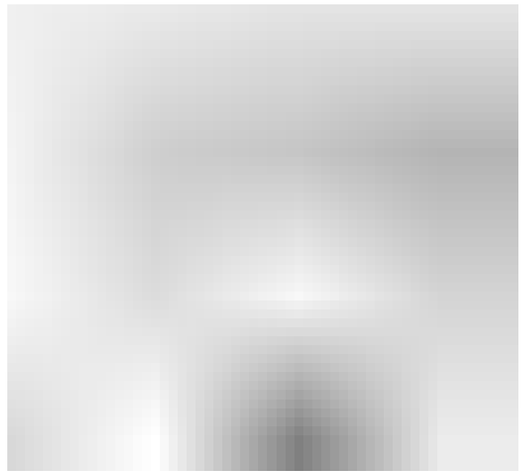

Figure 6.2

## 6、 Start, stop, run, pause, power and speed adjustment

Start operating: Click the triangle green button of "Run Program" in GRBL software to start (figure 7.1). The G code produced by GRBL will be continuously transmitted to the control board of the engraving machine. (Engraving process should keep connected)Stop operating: If you want to stop halfway, click thesquare red button of "Stop Program" in GRBLsoftware (figure 7.2) to end the program.If you want to pause, please click the hand button of "Pause" at the bottom right corner of the software interface (figure 7.3). If you want to continue engraving after the pause, please click the "Run" button.During operation, power and speed can beadjusted according to demand (figure 7.4).

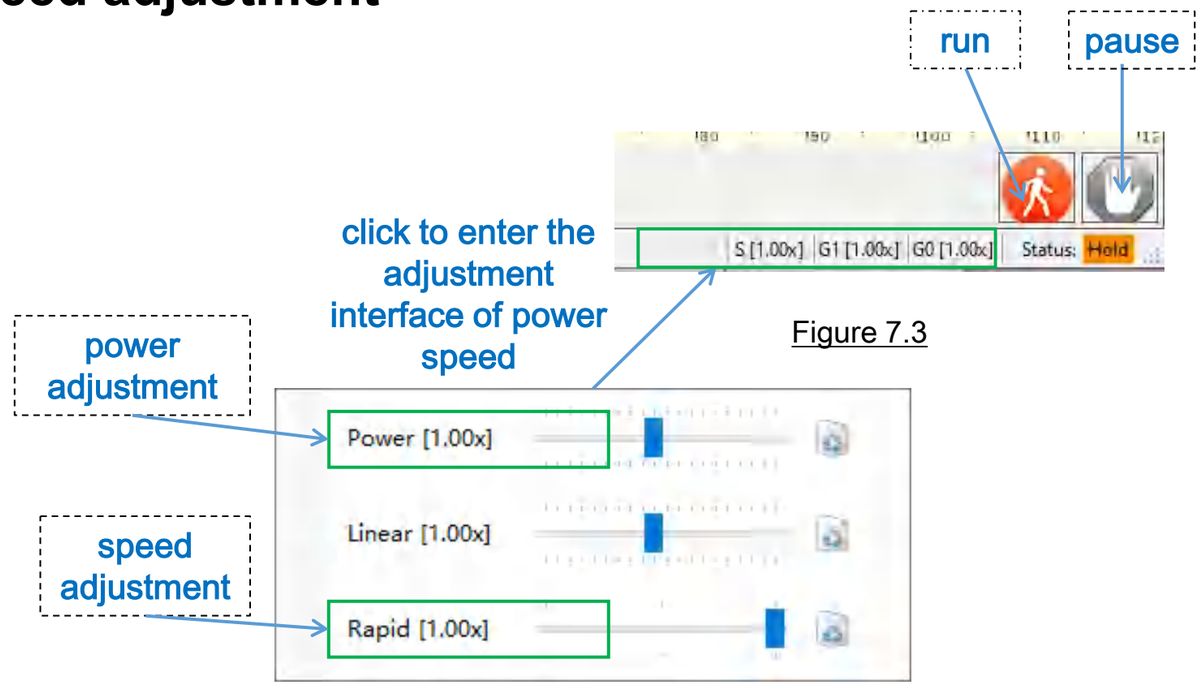


Figure 7.3

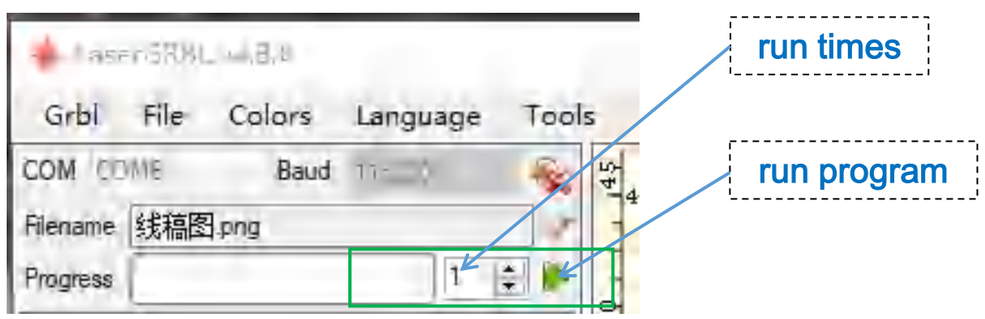


Figure 7.1

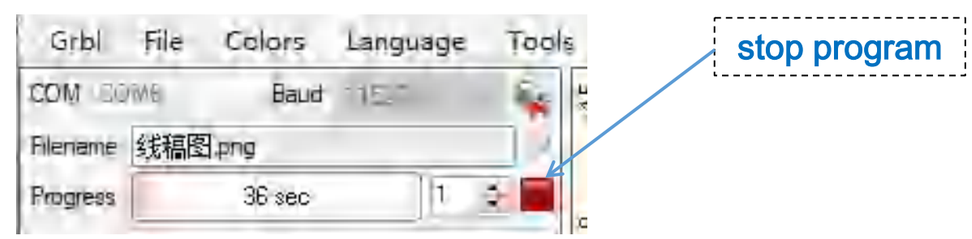


Figure 7.2

## Safety instructions while using the laser engraver :

1. It is strictly forbidden to place any living objects under the laser emitting port.
2. Patients with photosensitive epilepsy are prohibited from using or approaching this laser device.
3. When using a laser engraving machine, anyone who approaches the machine must wear laser safety goggles. Plus, our machine comes with a pair of safety goggles, but they can also be purchased on Amazon.
4. Requirements for goggles: wavelength protection 400-445 nm (+-5 nm), outer diameter +5, minimum L class L5.
5. Please do not place it separately when the machine is working to prevent the engraving material from catching fire. To be on the safe side, we recommend that you purchase a fire extinguisher and place it near the machine.
6. Please make sure that there is no combustible material near the laser engraving machine, we recommend using a fire cushion as a working surface.
7. When operating the laser engraving machine, ensure that there is a good ventilation system, and when the machine engraves some materials that may produce smoke, a special filter exhaust device should be used for discharge.
8. While the machine is running, do not touch objects such as laser beams or radiators, which can lead to serious bodily injury or beam reflections.
9. Do not allow children or adolescents to use laser engraving machines alone (especially children under 14 years of age), and at all times have the supervision of an adult.
10. For commercial use, it must be used and registered with regulatory bodies and professional associations.
11. The operating temperature range of this machine is -5°C-50°C.

## Dear Customers:

Thank you for purchasing our JICCODA LE-1 laser engraver. We valued all our consumers feedback and sincerely hope you will have a nice journey with the product.

JICCODA LE-1 attaches great importance to product quality and practicality, combining all laser supply chains to provide you with higher standards of quality and affordable products,which is ready to give you the best laser engraving & cuttingexperience.

Please let us know if you have any questions at anytime, we are always here to help. We promise one year quality warranty. By visiting our online store and get to know all more upcoming product and accessories.

Thanks again for your support,and we will consistently provide quality products and services in the future.

sincerely,

**JICCODA After sales**

**After-sales mail: Jiccoda-us@outlook.com**

**Jiccoda Ed** **JICCODA**

## FCC Warning

This device complies with part 15 of the FCC rules. Operation is subject to the following two conditions: (1) this device may not cause harmful interference, and (2) this device must accept any inte rference received, including interference that may cause undesired operation.

Changes or modifications not expressly approved by the party responsible for compliance could void the user's authority to operate the equipment.

NOTE: This equipment has been tested and found to comply with the limits for a Class B digital device, pursuant to part 15 of the FCC Rules. These limits are designed to provide reasonable protection against harmful interference in a residential installation. This equipment generates uses and can radiate radio frequency energy and, if not installed and used in accordance with the instructions, may cause harmful interference to radio communications. However, there is no guarantee that interference will not occur in a particular installation. If this equipment does cause harmful interferenceto radio or television reception, which can be determined by turning the equipment off and on, the user is encouraged to try to correct the interference by one or more of the following measures:

- Reorient or relocate the receiving antenna.
- Increase the separation between the equipment and receiver.
- Connect the equipment into an outlet on a circuit different from that to which the receiver is connected.
- Consult the dealer or an experienced radio/TV technician for help.

## Radiation Exposure Statement

This equipment complies with FCC radiation exposure limits set forth for an uncontrolled environment. This equipment should be installed and operated with minimum distance 20cm between the radiator and your body.