Mercedes-AMG G63

OWNER'S MANUAL

Pictures for reference only

- Please read this manual carefully before use
- Non-means of transport are not allowed to drive on the road
- The manual contains important information, please keep it safe for future reference.
- In order to improve the product and improve the quality, we may change parts of the product structure, appearance, packaging, and assembly methods without notice. When there is a difference between the specification and the object, please take the physical object as the standard, please understand!

About product 1

Thank you for buying children's electric vehicle licensed by the Mercedes Benz brand !

One of the most important things to do before use is to read this product manual carefully, which can tell you the details of the installation program and the correct method of use. It can also guide you to avoid improper operation to damage the product or hurt the rider. It's especially important that it tells you a lot about security considerations. Please memorize these contents and guide your child to use them. Please keep this instruction in good hands and keep it in easy access

" Mercedes Benz" The design of the product are protected by Daimler's intellectual property rights, Our company is authorized to use these trademarks.

Parameter specification:

Battery	6V4.5Ah*1 OR 12V4.5Ah*1
Charger	6V-8V OR 12V-15V

Applicable age: 36-72 months

Load limit： Less than 25 kg

Speed : Single drive 2.5 km / h Double drive 2.5-4.5 km / h

Dimension: 1100X690X565 mm

Power supply mode: Charging type

Charging interval: 8--12 hour

Battery life： About 300 recharges

Product name： Electric car

Parts list 2

Part number	Name of material	picture	Number	Remarks
1	car body		1	
2	windshield	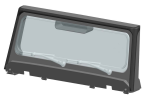	1	
3	support	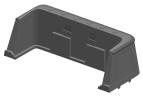	1	
4	seat		1	belt with safety belt
5	steering wheel		1	Screw rod with M5X37mm original machine
6	reflector		2	“ L”X1 “R”X1
7	wheel		4	
8	wheel cap		4	Stuck on a wheel
9	escape-pipe		2	“ L”X1 “R”X1
10	Steering front shaft		1	
11	Plastic wrench		2	
12	charger		1	
13	Remote control	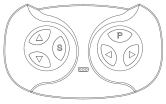	1	
14	MP3 line		1	L=200mm
15	toolbox		1	
16	Instructions		1	
17	Shaft cover		4	

Exploded view 3

Prior to installation 4

Warning

- It contains fine parts and is not suitable for children under 36 months.
- The product may contain a potentially dangerous sharp edge or sharp tip prior to assembly, so this product must be assembled from the adult!
- Please put the packing bag in time to avoid the suffocation due to the play of the baby! After the assembly is complete, take all the tools and the spare parts to be properly stored, and do not let the children touch!
- Please check the number of all components before installation. Please handle the packing plastic bag and protective film of the product. It is forbidden for children to play and have the risk of suffocation.
- Before charging, check whether the wire, plug, housing and other parts of the charger are damaged. If any damage is found, stop using it until the repair is in good condition.

Screwdriver [self-contained]

Tip forceps [self-contained]

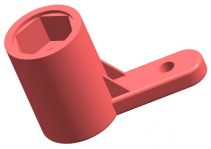

plastic wrenches

Battery Safety Warning

- **The non-rechargeable battery can not be charged;**
- **the rechargeable battery can only be charged under the supervision of the adult;**
- **Rechargeable batteries should be removed from toys before charging;**
- **Different types of batteries or new and old batteries can not be mixed;**
- **Batteries should be placed with correct polarity;**
- **The exhausted battery should be removed from the toy;**
- **The power terminal shall not be short-circuited;**
- **The product does not provide dry battery;**

Install front axle & Side exhaust pipe 5

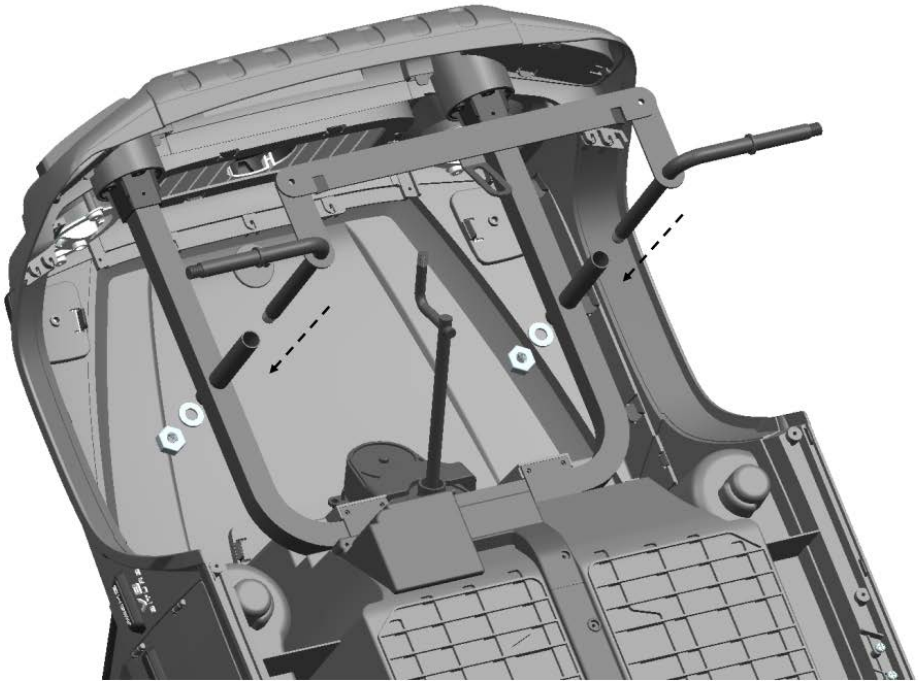

As shown, the direction of the front wheel shaft is distinguished, inserted on the support frame, and placed at the bottom of the frame with 1pc gasket, and then fixed with a nut with the front wheel shaft on top of the front wheel shaft;

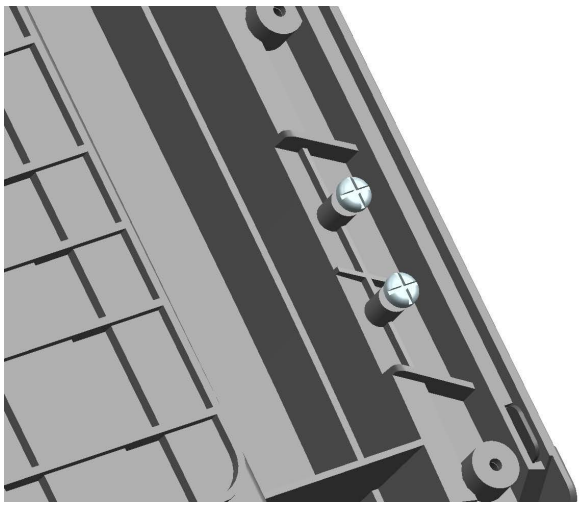

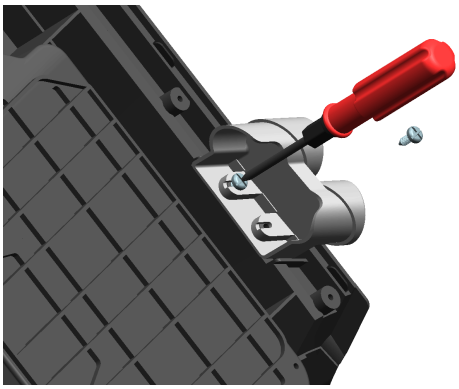

Install side exhaust pipe: distinguish between the left and right, place the side exhaust pipe stuck on the car body, and fix it with 2 M4X12mm screws on one side. [the screw has been half hit on the car body, unload first, and then install the side exhaust pipe]

Mounting front wheels & Dring wheels 6

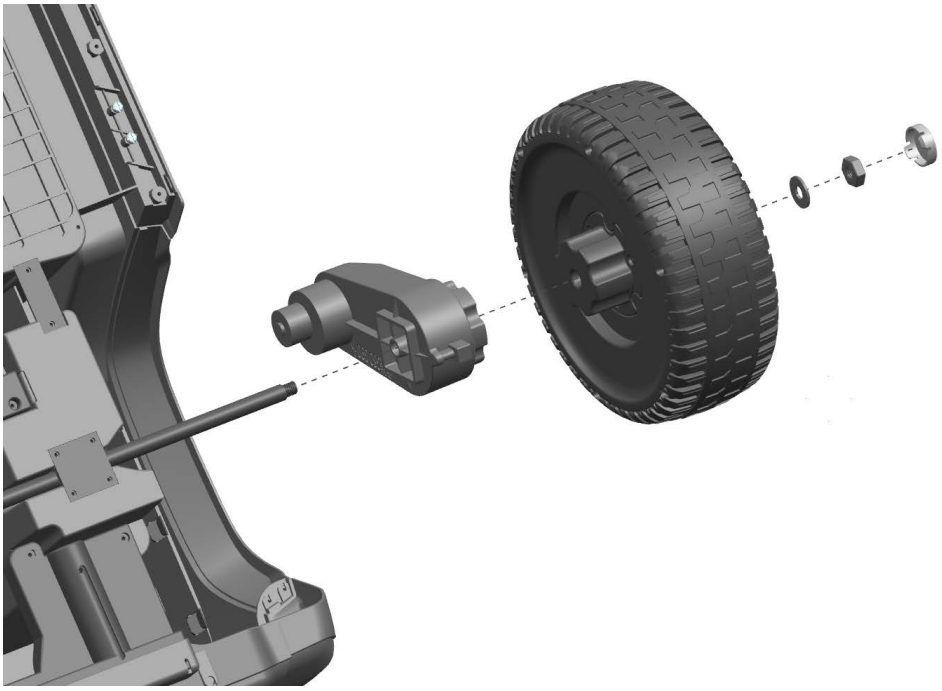

Installation rear wheel: The drive motor has been installed on the car body, directly installing the dring wheel, placing an additional 10 gasket, and then fixing with a M8 nut, finally, placing the wheel core cover;
[Note: The right and left dring wheel installation methods are the same]

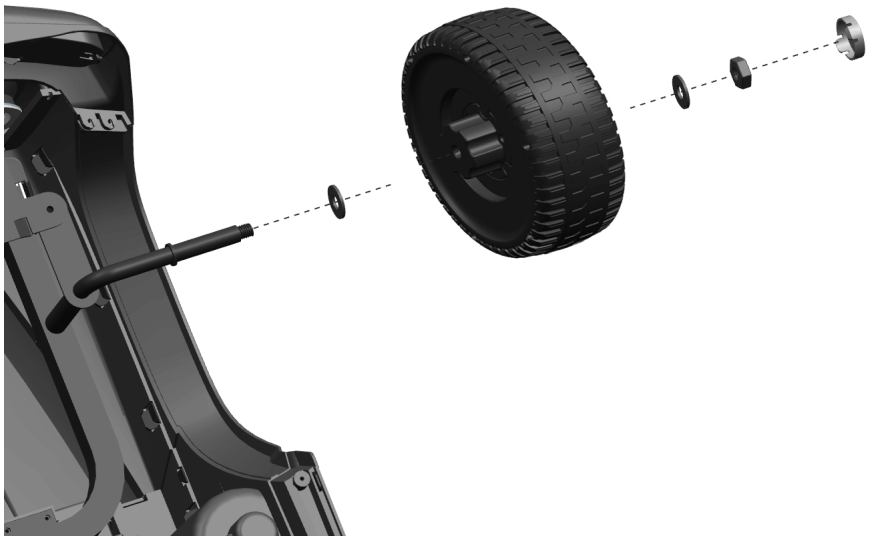

Install front wheel: The front axles are fixed with the front axle, and then the front wheels are installed, then the front wheels are placed, and then the front wheels are fixed with a M8 nut. Finally, the wheel core cover is placed on the front axle.**[Note: same installation method for left and right front wheels**

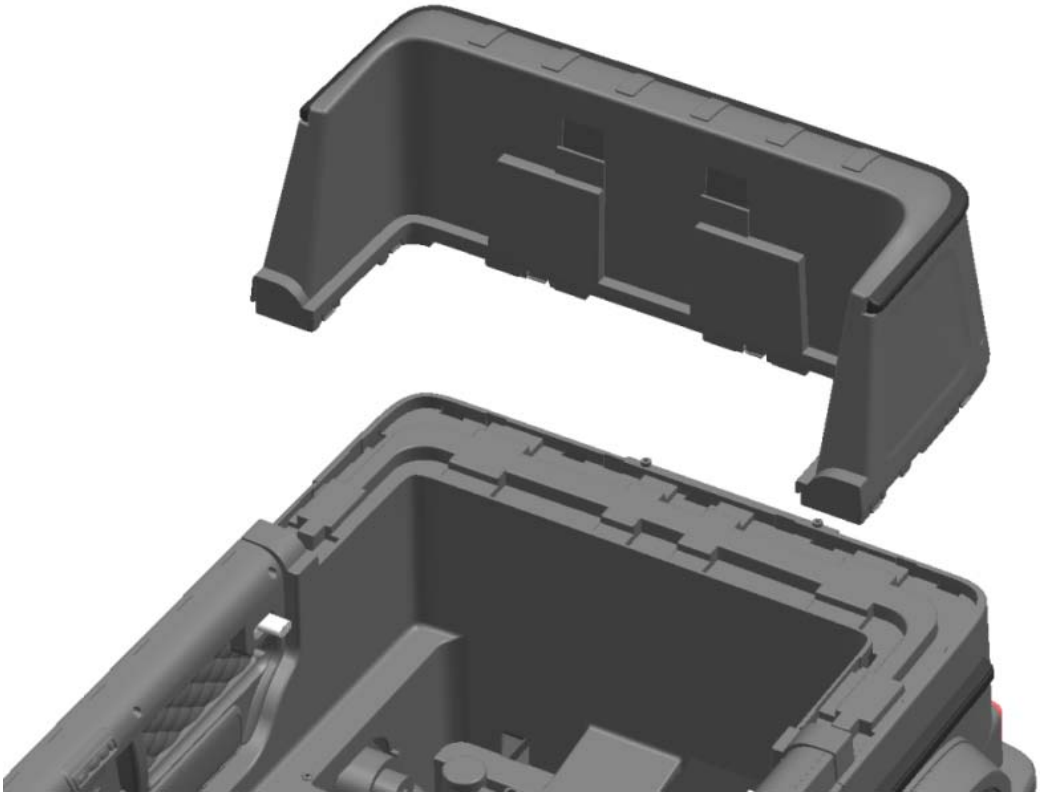

Installther back(of a chair)

Aim at the clamping hole of the car body, press down hard, and place the backrest stuck on the body of the car;

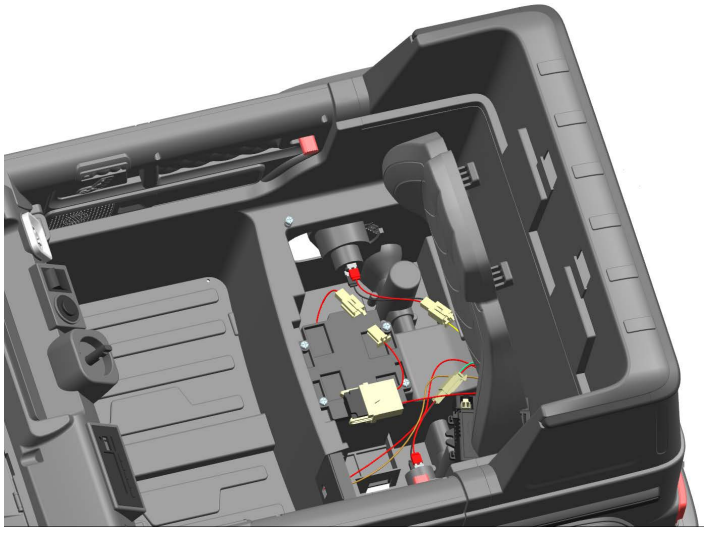

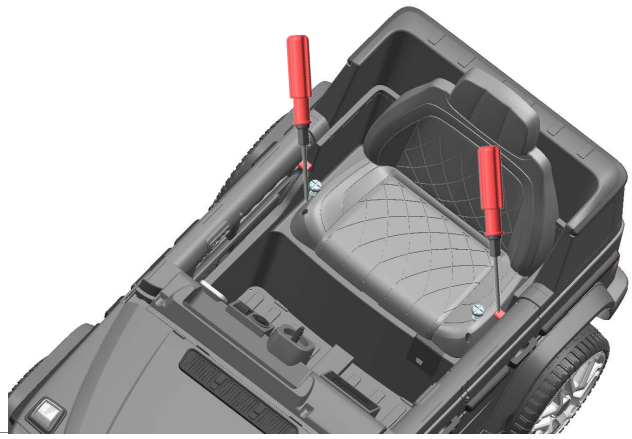

Install seat: first insert the post at the back of the seat on the car body, and then fix it with 2 M4X12mm tapping screws. [note: connect the plug-in the battery room before installing the seat and turn on the power supply; see the connecting power supply 10 for details.]

Installation Toolbox & steering wheel 8

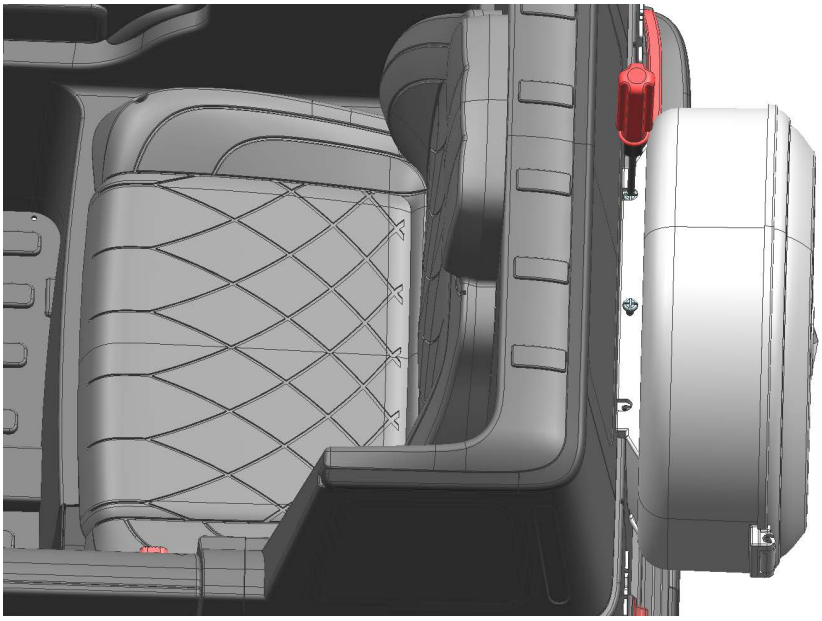

Install Toolbox: place the Toolbox on the body and secure it with 2pcsØ 4X12mm black screws;

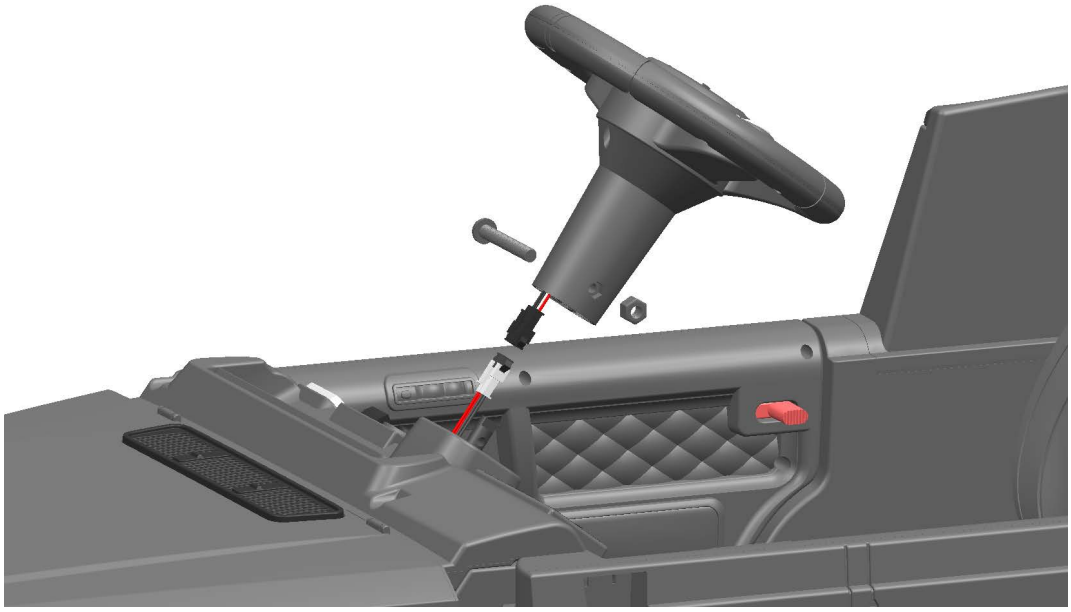

Install the steering wheel:[As shown] Connect the plug-in before installing the steering wheel, then install the steering wheel (slightly use the point force), and then fix the steering wheel with the screw of the original machine Ø5X40 and the M5 nut.

[Remarks: before the steering wheel is installed, the front and rear of the steering wheel shall be distinguished from reverse installation]

Installation of windshield and reflector 9

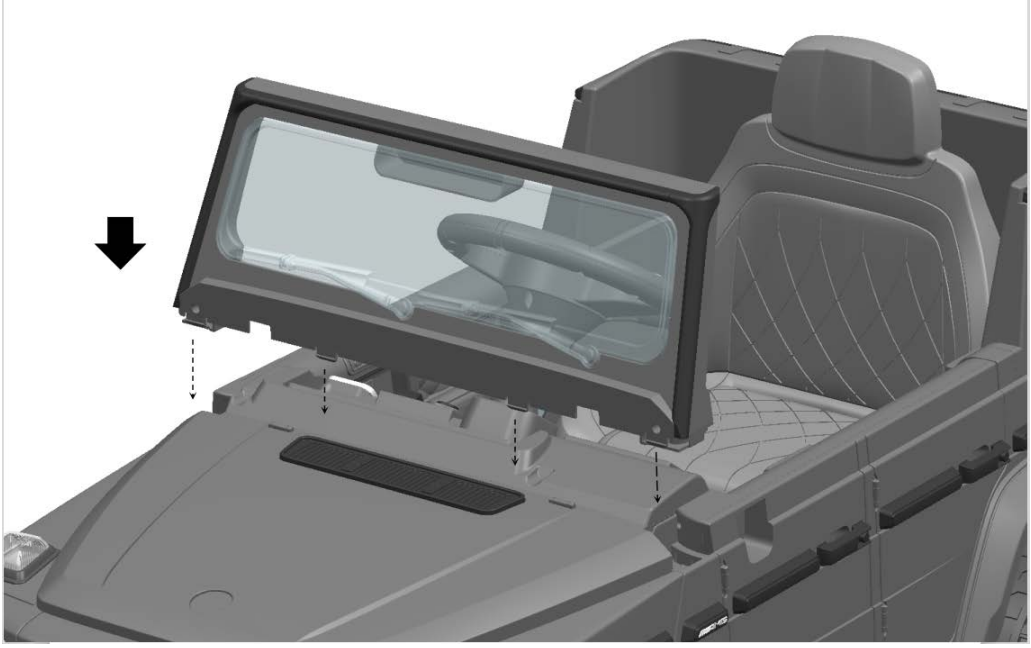

Install the windshield: align the card hole on the vehicle body and put the windscreen card on the vehicle body by force; (**Remarks: Make sure the card foot of the windscreen is fully clamped on the vehicle body)**

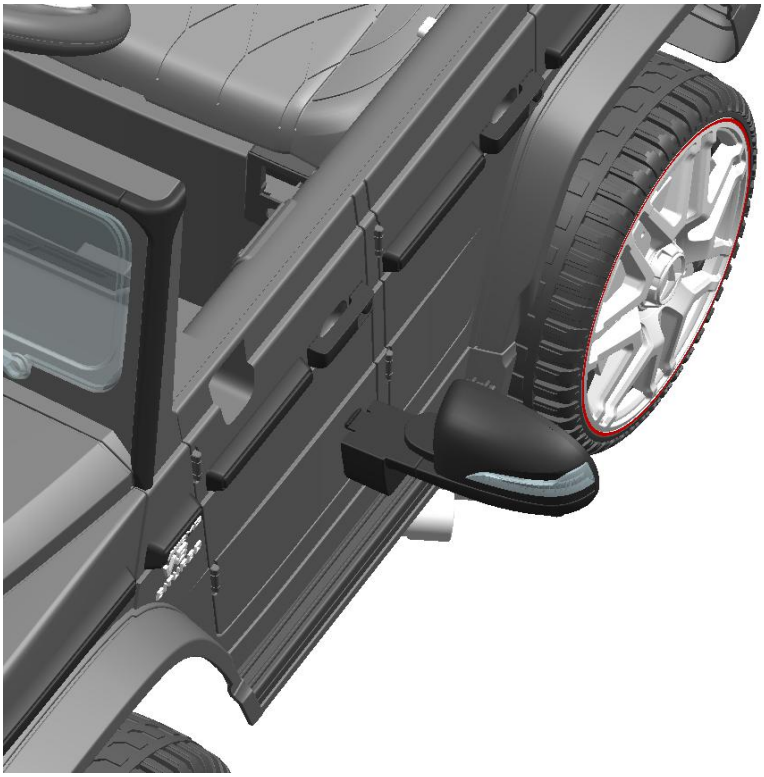

Install reflector: insert reflector in car body hole with a little effort.(**Note: distinguish reflector from right side before installation)**

Connecting power supply 10

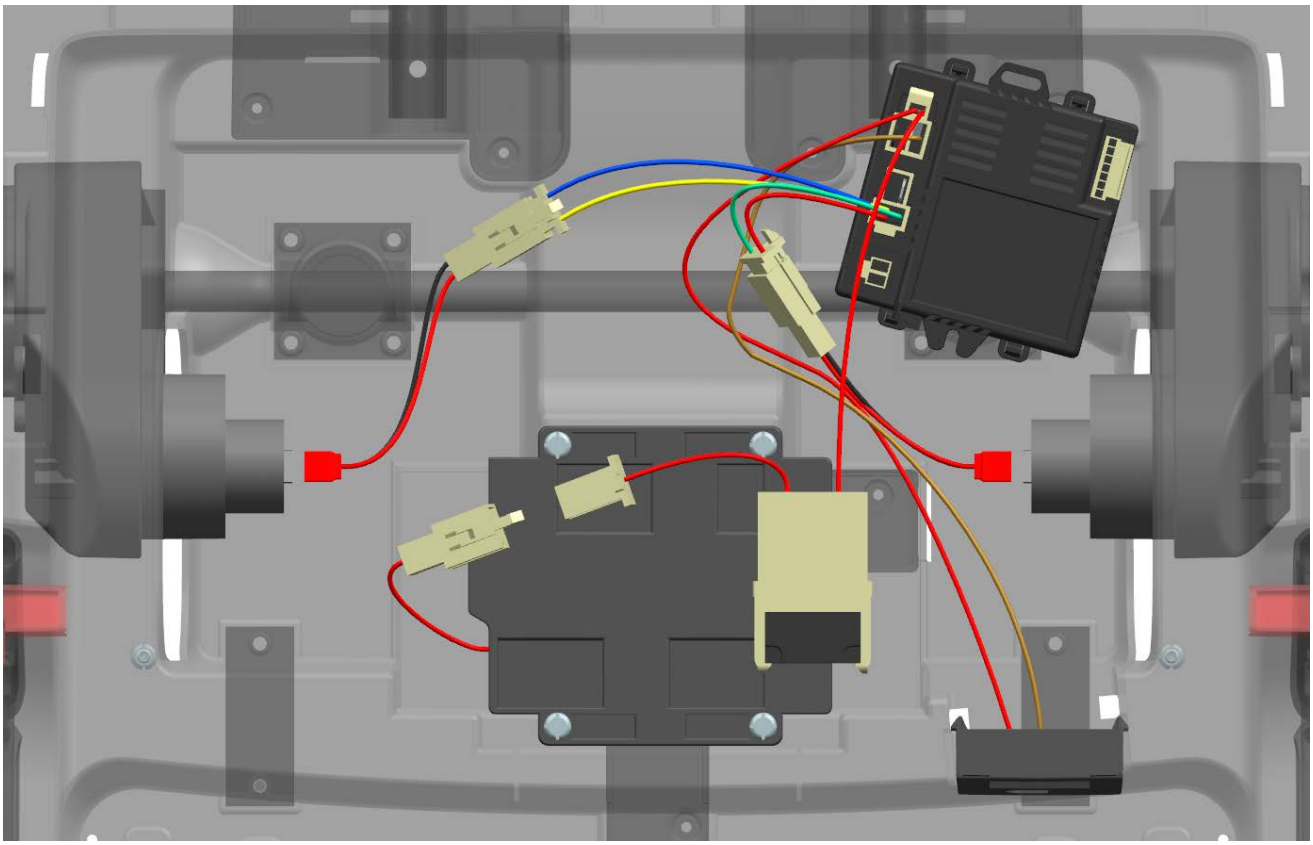

Docking power connection plug-in [subject to physical]

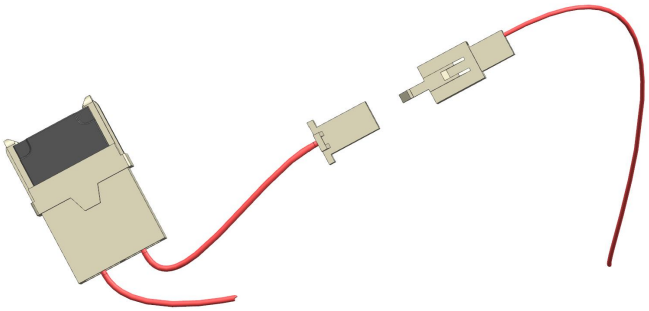

1.Dock the docking plug before installing the seat
2.Docking left drive motor and right drive motor and main line plug-in front of seat installation
3.Note: power plugs cannot be operated in reverse

Battery Safety Warning

Non-rechargeable batteries can not be recharged;
Batteries can only be recharged under adult supervision;
Rechargeable batteries should be removed from toys before charging;
Different types of batteries or old and new batteries can not be combined;
The battery should be placed in the correct polarity;
Exhaust batteries should be removed from toys;
Power terminals must not short-circuit
Dry batteries are not available

⚠WARNING!

- To reduce the risk of injury, adult supervision is required. Never use in roadways, near motor vehicles, on or near steep inclines or steps, swimming pools or other bodies of water; always wear shoes, and never allow more than one rider.
- The kinds of surfaces which are appropriate for safe use of the toy.
- Only use the battery specified by the manufacturer,
- Only use the charger specified by the manufacturer.
- Suitable for age 3+ years, Maximum user weight is 25 kgs.
- Not to be used in traffic .

Safety warning

Please tell your child and his playmate about the following safety rules and make sure they understand!

- Make sure your child uses this product in a safe driving environment, such as home, garden or playground.
- Note that vehicles are only suitable for driving on hard and flat roads. To ensure safety, it is prohibited to drive in the following non-safe environments:

  A Trench pits, creek lawns, slopes, or rough ground;

  B A place where roads or other vehicles run and where pedestrians walk;

  C It is possible to hit an obstacle that can cause injury;

  D Other unsafe zones;
- Avoid children driving in the dark, children do not deal with unexpected obstacles or accidents. Drive only during the day or in a bright area.
- Do not use this product outdoors when it rains or snows.
- Please make sure that the users of the product are within the applicable age range of the product and not exceed the maximum deadweight.
- To avoid accidents, make sure the vehicle is safe before driving.
- Please do not let any children get close to the moving vehicle, and do not let the child touch t' wheel.
- The car is equipped with a safety belt, please guide children to wear the belt when using to ensure safety.

This product is only allowed to be used on flat ground!

Do not use this product on the lawn!

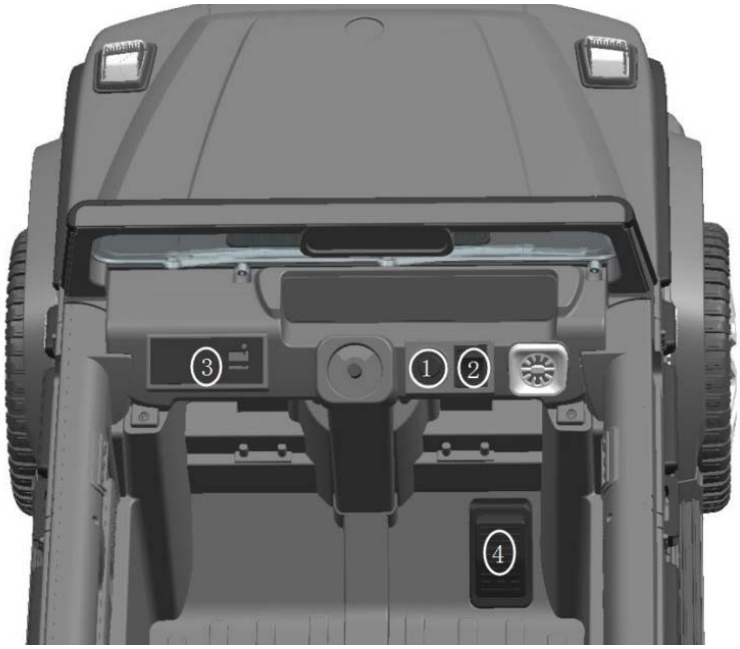

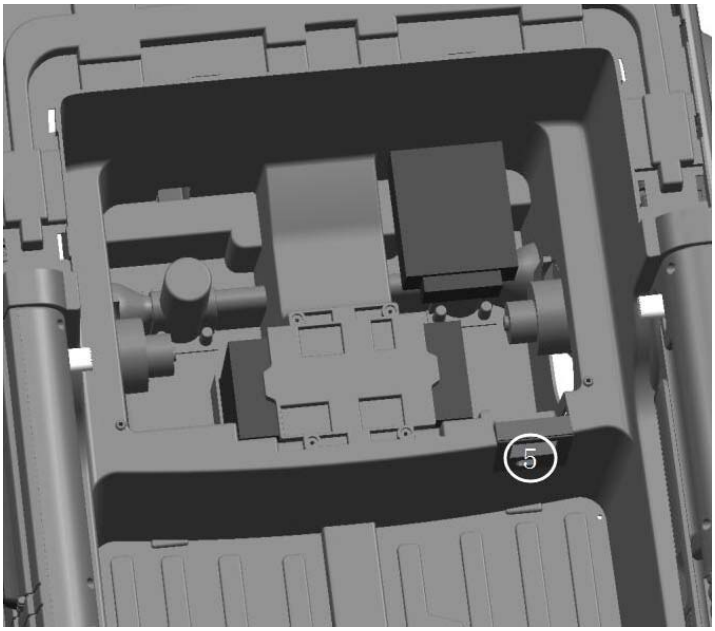

① Power switch: turn on or off the power

② Forward / back switch:

control the moving direction of the product, forward or backward;

③ MP3 player: see 14 for details

④ Foot switch: step on the foot switch, the vehicle moves, lift the foot loose, the vehicle slowly brake;

⑤ Charging socket

⚠ Warning !

When shifting, make sure the vehicle is completely stopped and avoid damage to the gearbox and motor.

Player operation signal 13

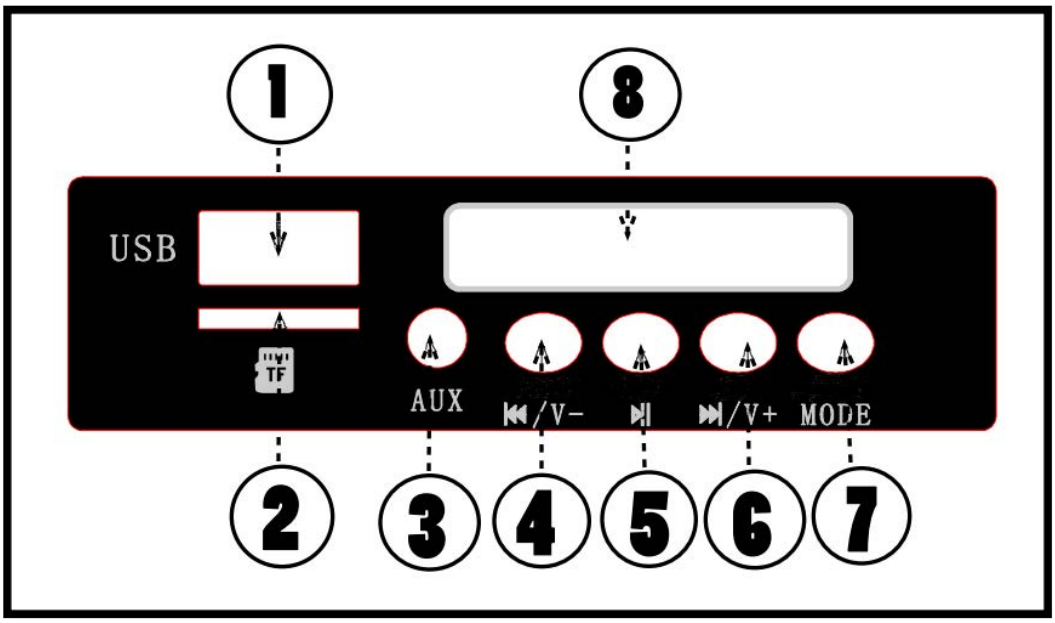

① USB interface: insert USB terminal, connect audio source, can play audio;

② TF card Jack: insert TF card, can play audio;

③ MP3 interface: through the data line can be connected to other devices and play audio;

④ Volume-/ early education English: long press this key, volume is reduced; touch this key, playearly education English;

⑤ Pause button: touch this button, pause the audio playing;

⑥ Volume / music keystroke: long press this key, volume increase, touch this key, play music;

⑦ Storytelling button: touch this key, play the story;

8. Voltage display: the value on the display can be used to determine whether the battery is charged or not. (single drive: charge below 6.2V; double drive: charge below 12.5V)

Steering wheel function operation instructions:

A. Horn keystroke: touch and press the sound of horn;

B Music keystroke: Touch this key, play music, touch again, music switch:

2.4G remote control instructions [optional function]

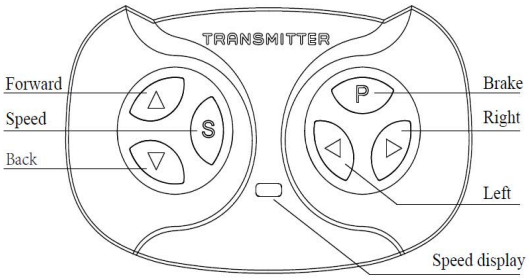

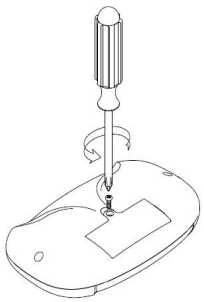

Loosen a screw

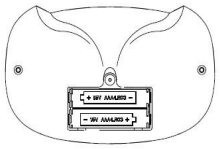

Load two AAA(1.5V) batteries

This equipment complies with FCC RF radiation exposure limits set forth for an uncontrolled environment. This equipment must be installed and operated in accordance with provided instructions and must not be co-located or operating in conjunction with any other antenna or transmitter. End-users and installers must be provided with antenna installation instructions and transmitter operating conditions for satisfying RF exposure.

Step 1: open the battery cover on the back of the remote control and load into 2pcs AAA(1.5V) batteries; (dry batteries are not available in this product)
Step 2: turn off the main power switch on the car;
Step 3: hold down **Forward and Back** keys at the same time, (note that hold down at the same time) when the **Speed display** flashing, the main power switch on the car, the **Speed display** red light to stop flashing, code success;
Key description: **Speed** key for speed regulation, each time change a speed,**Speed** key on a red light for low speed, two red lights for medium speed, three red lights for high speed;

a. Press button **Forward** and the car moves forward;
b. Touch and press **Back** , the car back;
c. Press button **Speed display** to adjust the speed of the car.
d. Touch and press **Left** key . The car turns to the left.
e. Touch and press **Right** and the car turns to the right;
f. **Brake** for the brake key, touch the car to maintain the brake state, red indicator all flashing, and then touch the brake state contact;

Battery Safety Warning

Howtoswitchtheremotecontrol systemtoanon-remotecontrol system?
Step 1: Open the seat .
Step 2: Switch the control switch from remote control to pedal state.
Step 3: Install the seat.
The self-driving function can be used only when the operation is completed.**[Note:Theaboveoperationsmustbe operatedby adults]**

WARNING! The remote control is not a toy. It is for the adult use only, and should not be used by a child. A close adult supervision is always required. Reception range may change significantly with weather, battery, and other environmental conditions.

Circuit diagram 15

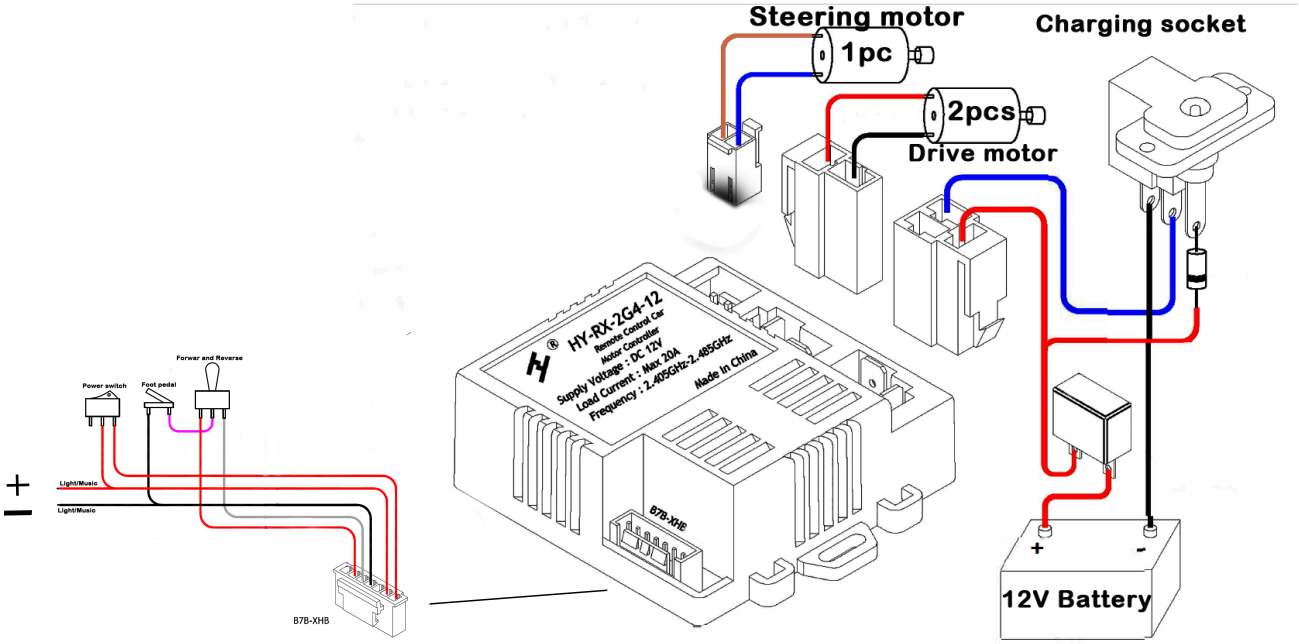

Remote control Safety Warning

This device complies with Part 15 of the FCC Rules. Operation is subject to the following two conditions: (1) this device may not cause harmful interference, and (2) this device must accept any interference received, including interference that may cause undesired operation.

Changes or modifications not expressly approved by the party responsible for compliance could void the user's authority to operate the equipment.

This equipment has been tested and found to comply with the limits for a Class B digital device, pursuant to part 15 of the FCC Rules. These limits are designed to provide reasonable protection against harmful interference in a residential installation. This equipment generates uses and can radiate radio frequency energy and, if not installed and used in accordance with the instructions, may cause harmful interference
to radio communications. However, there is no guarantee that interference will not occur in a particular installation. If this equipment does cause harmful interference to radio or television reception, which can be determined by turning the equipment off and on, the user is encouraged to try to correct the interference by one or more of the following measures:

—Reorient or relocate the receiving antenna.
—Increase the separation between the equipment and receiver.
—Connect the equipment into an outlet on a circuit different from that
to which the receiver is connected.

—Consult the dealer or an experienced radio/TV technician for help.

Note before charging 16

⚠ Warning!

- This product has the charge protection function: when charging, the vehicle all functions are not available!
- Charging must be done by adults! Chargers and batteries should not be touched by children!

⚠ Warning!

- Prevention of fire or electric shock:
- Use of chargers and batteries as specified by the manufacturer is permitted only. Use of other brands of chargers and batteries is prohibited, otherwise fire and explosion may be caused.
- Do not use this charger and battery on other products, or overheating may lead to fire and explosion.
- Do not change the wiring structure of the product without authorization, or it may cause fire and explosion and permanent damage to the product.
- Do not use tools to connect the positive and negative electrodes of the battery, otherwise it may cause fire and explosion.
- Always keep battery dry, do not allow contact with fresh or salt water.
- The battery produces harmful gases and smells irritating when it is charged. Smoking in the vicinity of a rechargeable battery is prohibited, and any flame or spark is forbidden to cause accidents such as explosion.
- Vehicles must be charged in well-ventilated, dry areas.
- Don't turn on the battery and charger.
- Do not turn the battery upside down.
- Check the charger, battery and plug before charging. If any damage is found, stop using it until it is repaired and reused.
- Battery heating is a normal phenomenon during charging, but when the temperature is too high, we should check if the charging current is too large or if the battery is short circuit.
- The battery must be fixed with a plate. If the car is overturned, the battery is likely to hurt the child.
- If the product is collected or not used for a long time, it must be fully charged and recharged once a month to ensure the battery life.
- Chargers and batteries are not toys and children are not allowed to touch and play.

- Chargers and batteries are not toys and children are not allowed to touch and play.
- It is recommended to charge for 4-6 hours before first use, but not more than 10 hours.
- When the speed of the vehicle is obviously slowing down, it means that the battery is not enough, please charge it in time
- Charge 8-12 hours each time, but not more than 20 hours.

Charging signal 17

- When the product has no operation, if the voltage display panel shows the value of the following figure, please charge:

Battery parameter	magnitude of voltage	Battery condition
6V4.5AhX1 6V7AhX1	≥6.6	Battery full charge
	6.5--6.3	This product can be used normally
	≤6.2	The product is not usable and the battery needs to be recharged
6V4.5AhX2 6V7Ah*2 12V4.5AhX1 12V7AhX1	≥13.2	Battery full charge
	13.1--12.6	This product can be used normally
	≤12.5	The product is not usable and the battery needs to be recharged

⚠ WARNING!

This product with CHARGING PROTECTION:
When charging, all the functions will be cut off!

⚠ WARNING!

This toy is only to be connected to equipment bearing either of the following symbols.

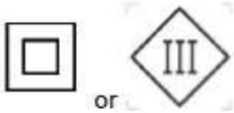

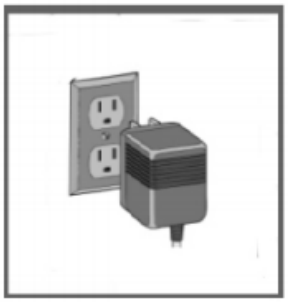

1. Find The charging input socket below the seat;
2. Plug the charger port into the input socket;
3. Plug the charger plug into a wall outlet. The battery will begin charging.

Fuse

This product is equipped with self-reset fuse, when overload or improper use, self-reset fuse will automatically cut off the power supply for 15-20 seconds, and then restart. The self-reset fuse of the car is installed under the seat.

- To avoid fusing off the power:
- This product can not be overloaded, the maximum dead weight is: 25 kg.
- Do not drag anything behind this product.
- Do not allow water or other liquids to infiltrate electrical components such as lines, batteries, etc.
- Do not change the wiring system and structure of this product without authorization.

Maintenance and maintenance

- Before using, parents should check whether the main parts are in good condition, battery, charger, wire, plug, casing and other parts are damaged, screws are loose; If there is a potential safety hazard, stop using the damage until it is repaired.
- After a period of time, lubricate the iron parts of the vehicle with a small amount of lubricating oil to prevent the iron parts from rusting
- Vehicles should be kept away from the source of fire and avoid long-term illumination. Keep it flat, not upside down. In wet weather, cars should be parked indoors or covered with tarpaulins.
- Vehicles should stay away from hotter objects, such as stoves and heaters, where plastic parts may melt. When charging, stay away from flammable substances and prevent fire.
- After use, please charge in time, charge must be adult operation. If you do not have to charge the battery for long periods of time, charge it at least once a month to extend the battery life.
- The dry soft cloth can be used to wipe the vehicle and the non-waxy furniture polish can be used instead of the soft cloth to wipe the plastic parts in order to achieve the effect of surface finish. Do not wipe plastic parts of toys with chemical solvents. Do not wash vehicles with soap and water. Do not drive a car in rainy or snowy weather. Water can damage the motor, the electrical system of the vehicle, and the battery.
- When you stop using or placing the product, please turn off the power of the product and dial all switches to "stop" or "off".
- Do not use fuses that do not conform to the specifications of this product.
- Do not change the structure and circuit system of this product without authorization. Repair work must be carried out by a professional or under the guidance of a technician.

Troubleshooting 19

fault type	checkpoint	Exclusion method
Motor non-rotation	1. Is the fuse of the vehicle overloaded? (fuse box under the seat of the car) 2. Is the pedal switch in good contact? 3. Is the welding wire on the motor terminal good? 4. Is the connection to the motor lead good? 5. Will the motor plug-in off, directly connected to the battery whether to rotate?	Yes, the fuse automatically cuts off the power for 15-20 seconds and restarts: No, next. No, fix the foot switch; Yes, the next item. No, weld the terminal wire well; yes, the next item. No, plug in the plug-in; yes, the next item. Do not rotate, change motor; rotate, drive circuit board need professional maintenance, contact agent or dealer.
Not backward or backward.	1. Detect forward / back switches and use a multimeter to determine whether the contact is good? 2. Is the drive circuit to forward / backward switch wiring good?	No, replace the forward / back switch;Yes, the next item No, connect the line; yes, drive the circuit board malfunction, contact the agent or dealer.
Speed slow.	1. Check if the battery voltage is normal? 2. Will the motor (with gear box) be connected directly to the battery, is the speed accelerated?	No, charge; Yes, next item. Yes, driver circuit board malfunction, contact agent or distributor
The car is moving and the sound and light are not at all	1. Is the acousto-optic switch good? 2. Check that the line and plug-in from the battery to the front are in good condition	No, change the switch; Yes, the next item. No, connect the plug-in well and connect the broken wire.
The wheels turn and the car does not move	1. Does the drive wheel rotate? 2. Check the gearbox to see if the gear levels are damaged?	Yes, lay the wheel on the ground; No, next. Yes, replace a new gearbox.
The above troubleshooting methods, in the user conditions do not have, please contact the agent or dealer.		

●The illustrations used in this manual are intended to illustrate the operation and structure of the product. In the event of minor differences between the material and the illustrations, the physical object shall prevail.

●In order to improve the quality of the product, we may change the part structure and appearance of the product without being told, please understand.

●The package contains important information and must be retained.

Enterprise passed ISO 9001: 2015 quality management system certification