ENGINEERING TEST REPORT

Safe Remote Control
Model No: SRC-002-901

FCC ID: 2A8I8-1000350
IC: 29381-1000350

Tested For
FORT Robotics
1608 Walnut St floor 12,
Philadelphia, PA,
USA, 19103

In accordance with
SAR (Specific Absorption Rate) Requirements using guidelines established in IEEE C95.1-2019,FCC OET Bulletin 65 (Supplement C), FCC 47CFR Part 2.1093 And Industry Canada RSS-102 (Issue 5)

UltraTech's File No.: FORT-001-002Q_SAR

This Test report is Issued under the Authority of Tri M. Luu, BASc, Vice President of Engineering UltraTech Group of Labs Date: Apr 05, 2023	
Report Prepared by: Pedro G. Moreira, EMC Test Technician Issued Date: Apr 05, 2023	Tested by: Pedro G. Moreira, EMC Test Technician Test Dates: Feb 09, Feb 10 and Mar 08, 2023

- *The results in this Test Report apply only to the sample(s) tested, and the sample tested is randomly selected.*
- *This report must not be used by the client to claim product endorsement by NVLAP or any agency of the US Government.*
- *This test report shall not be reproduced, except in full, without a written approval from UltraTech Group of Labs.*

UltraTech Group of Labs

3000 Bristol Circle, Oakville, Ontario, Canada, L6H 6G4
Tel.: (905) 829-1570 Fax.: (905) 829-8050
Website: www.ultratech-labs.com , Email: vic@ultratech-labs.com , Email: tri@ultratech-labs.com

0685 | APEC TELCA0001 | 1309 | CA 0001/2049 | AT-1945 | SL2-IN-E-1119R | Korea KCC-RRA CA0001

TABLE OF CONTENTS

EXHIBIT 1. INTRODUCTION 2

1.1. SCOPE 2
1.2. REVISION HISTORY 2
1.3. REFERENCES 3

EXHIBIT 2. PERFORMANCE ASSESSMENT 4

2.1. CLIENT AND MANUFACTURER INFORMATION 4
2.2. DEVICE UNDER TEST (D.U.T.) DESCRIPTION 4
2.3. LIST OF D.U.T.'S ACCESSORIES: 6
2.4. SPECIFIC OPERATING AND TEST CONDITIONS 7

EXHIBIT 3. SUMMARY OF TEST RESULTS 8

3.1. LOCATION OF TESTS 8
3.2. APPLICABILITY & SUMMARY OF SAR RESULTS 8

EXHIBIT 4. SAR SYSTEM CONFIGURATION 9

4.1. DASY5 SYSTEM OVERVIEW 9
4.2. SAR TEST PHANTOMS 12

EXHIBIT 5. SAR DATA ACQUISITION METHODOLOGY 13

5.1. SAR MEASUREMENT PROCEDURE 13

EXHIBIT 6. MEASUREMENTS, EXAMINATIONS & TEST DATA 17

6.1. TEST CONFIGURATIONS 17
6.2. GENERAL TEST SETUP 19
6.3. PHOTOGRAPHS OF TISSUE DEPTH AND EUT FOR BODY SAR CONFIGURATION 19

EXHIBIT 7. SAR MEASUREMENT SYSTEM VERIFICATION 21

7.1. STANDARD SOURCE 21
7.2. STANDARD SOURCE INPUT POWER MEASUREMENT 22
7.3. SYSTEM VALIDATION PROCEDURE 22
7.4. VERIFICATION RESULTS 22

EXHIBIT 8. D.U.T. POWER MEASUREMENT 26

8.1. RF CONDUCTED OUTPUT POWER MEASUREMENT 26

EXHIBIT 9. TISSUE DIELECTRIC PARAMETER CALIBRATION 27

9.1. SIMULATED TISSUE 27
9.2. MEASUREMENT OF ELECTRICAL CHARACTERISTICS OF SIMULATED TISSUE 28
9.3. SIMULATED TISSUE MEASUREMENT RESULTS 29

EXHIBIT 10. SAR MEASUREMENT UNCERTAINTY 30

10.1. MEASUREMENT UNCERTAINTY EVALUATION FOR SAR TEST 30

EXHIBIT 11. ADDITIONAL TEST INSTRUMENTS LIST 31

EXHIBIT 12. SAR MEASUREMENT DATA 31

EXHIBIT 13. SAR CALIBRATION CERTIFICATE 31

EXHIBIT 14. DUTY CYCLE MEASUREMENT PROCEDURE 31

EXHIBIT 1. INTRODUCTION

1.1. SCOPE

Reference:	SAR (Specific Absorption Rate) Requirements IEEE C95.1-2019, FCC OET Bulletin 65 (Supplement C Edition 01-01), FCC 47CFR Part 2.1093 Industry Canada RSS-102 (Issue 5).
Title	Safety Levels with respect to human exposure to Radio Frequency Electromagnetic Fields Guideline for Evaluating the Environmental Effects of Radio Frequency Radiation
Purpose of Test:	To verify compliance with Federal regulated SAR requirements in Canada and the US.
Method of Measurements:	IEEE C95.1-2019, FCC OET Bulletin 65 (Supplement C Edition 01-01) and Industry Canada RSS-102 (Issue 5)
Device Category	Spread Spectrum Transmitter
Exposure Category	General Population

1.2. REVISION HISTORY

Document	Issue Date	Description
FORT-001Q_SAR-(SRC)	Apr 05, 2023	Original

1.3. REFERENCES

The methods and procedures used for the measurements contained in this report are details in the following reference standards:

Publications	Year	Title
IEEE Std. 1528	2013	Draft Recommended practice for determining the Peak Spatial-Average Specific Absorption rate (SAR) in the Human Body Due to Wireless Communications Devices: Experimental Techniques.
Industry Canada RSS-102, Issue 5	2015	"Evaluation Procedure for Mobile and Portable Radio Transmitters with respect to Health Canada's Safety Code 6 for Exposure of Humans to Radio Frequency Fields"
NCRP Report No.86	1986	"Biological Effects and Exposure Criteria for radio Frequency Electromagnetic Fields"
FCC OET Bulletin 65	2001	"Evaluating Compliance with FCC Guidelines for Human Exposure to radio Frequency Fields"
ANSI/IEEE C95.3	2002	"Recommended Practice for the Measurement of Potentially Hazardous Electromagnetic Fields - RF and Microwave"
ANSI/IEEE C95.1	2019	"Safety Levels with Respect to Human Exposure to Radio Frequency Electromagnetic Fields, 3kHz to 300GHz"
ARPANSA	2002	RADIATION PROTECTION STANDARD Maximum Exposure Levels to Radiofrequency Fields — 3 kHz to 300 GHz Radiation Protection Series Publication No. 3
EN 50566	2017	Product standard to demonstrate compliance of radio frequency fields from handheld and body-mounted wireless communication devices used by the general public (30 MHz - 6 GHz)
EN 62479	2010	Assessment of the compliance of low power electronic and electrical equipment with the basic restrictions related to human exposure to electromagnetic fields (10 MHz to 300 GHz)
IEC 62209-2	2010/A1:2019	Human exposure to radio frequency fields from hand-held and body-mounted wireless communication devices – Human models, instrumentation, and procedures – Part 2: Procedure to determine the specific absorption rate (SAR) for wireless communication devices used in close proximity to the human body (frequency range of 30 MHz to 6 GHz)
IEC/IEEE 62209-1528	2020	Measurement procedure for the assessment of specific absorption rate of human exposure to radio frequency fields from hand-held and body-mounted wireless communication devices – Part 1528: Human models, instrumentation, and procedures (Frequency range of 4 MHz to 10 GHz)
FCC KDB	2017	865664 D01 SAR Measurement 100 MHz to 6 GHz 643646 D01 SAR Test for PTT Radios 648474 D04 Handset SAR 447498 D01 General RF Exposure Guidance 388624 D01 Permit But Ask Procedure 388624 D02 Permit But Ask List 865664 D02 RF Exposure Reporting 690783 D01 SAR Listings on Grants
Health Canada's Safety Code 6	2015	Limits of Human Exposure to Radiofrequency Electromagnetic Energy in the Frequency Range from 3 kHz to 300 GHz

EXHIBIT 2. PERFORMANCE ASSESSMENT

2.1. CLIENT AND MANUFACTURER INFORMATION

APPLICANT:	
Name:	FORT Robotics
Address:	1608 Walnut St Floor 12 Philadelphia, PA, US, 19103
Contact Person:	Nathan Bivans Phone #: +1 215-692-4062 Email Address: nathan@fortrobotics.com

MANUFACTURER:	
Name:	FORT Robotics
Address:	1608 Walnut St Floor 12 Philadelphia, PA, US, 19103
Contact Person:	Nathan Bivans Phone #: +1 215-692-4062 Email Address: nathan@fortrobotics.com

2.2. DEVICE UNDER TEST (D.U.T.) DESCRIPTION

The following is the information provided by the applicant.

Trade Name	Safe Remote Control
Type/Model Number	SRC-002-901
Serial Number	N/A
Transmitter Frequency Band	902.4-927.65 MHz
Maximum RF Output Power	30 dBm (1 W) maximum conducted power
Modulation Employed	FHSS
Description	Safe Remote Control System is a medium to long-range wireless controller designed from the ground up to enable the safe operation of remote and automated systems.
Antenna	Linx Technologies Inc ¼ wave whip, straight antenna, model: ANT-868-CW-QW, 1.6 dBi peak gain.
Primary User Functions of D.U.T.	Control of remote, tele-operated, semi- or fully autonomous robotic systems where safety and usability are critical

Photograph of D.U.T

< D.U.T. Front view>

< D.U.T. Back view>

2.3. LIST OF D.U.T.'S ACCESSORIES:

< Linx Technologies Inc ¼ wave whip, straight antenna, model: ANT-868-CW-QW, 1.6 dBi peak gain. >

2.4. SPECIFIC OPERATING AND TEST CONDITIONS

Channel Frequencies selected for test per IEEE Std. 1528:2013 Section6.3.5

Frequency Band			# Test	Test Frequencies (MHz)		
Low	High	Centre	CH	F1	F2	F3
902.40	927.65	915.00	3	902.40	914.63	927.65

1. The tests consider the Body configurations limits, since the equipment can be hanged among the body of the operator.

2. The test is done in different positions of the DUT (front and back), considering the worst case value for conservative analyses.

3. SAR scaling up for power drift, duty-cycle and max power of tune-up procedure is required.

4. For measuring the duty cycle of the EUT refer to Appendix 3

EXHIBIT 3. SUMMARY OF TEST RESULTS

3.1. LOCATION OF TESTS

All of the measurements described in this report were performed at UltraTech Group of Labs located at:

3000 Bristol Circle, the city of Oakville, Province of Ontario, Canada.

All measurements were performed in UltraTech's shielded chamber, 16' x 13' x 8'.

3.2. APPLICABILITY & SUMMARY OF SAR RESULTS

SAR LIMITS – General Population					
	Australia ACA	North America ANSIC95.1	Europe ENV50166	Japan TTC/MPT	New Zealand NZS2772
Whole Body	0.08 W/kg	0.08 W/kg	0.08 W/kg	0.04 W/kg	0.08 W/kg
Spatial Peak	2.0 W/kg	1.6 W/kg	2.0 W/kg	2.0 W/kg	2.0 W/kg
Averaging Time	6 min	6 min	6 min	6 min	6 min
Averaging Mass	10g	1g	10g	10g	10g
Shape	Cube	Cube	Cube	Cube	Cube

The maximum peak spatial – 1g average SAR measured was found to be **1.20** ***W/Kg*** for body configuration with the DUT on front position faced to the phantom. The limit for SAR 1 g spatial peak Average is **1.6** ***W/Kg*** for General Public/Uncontrolled exposure.

Reported SAR for Body (Front)*

Antenna	Power (mW)	CH. Freq (MHz)	Body SAR1g (W/Kg)	Body SAR10g (W/Kg)
ANT-868-CW-QW	872.97	902.40	0.81	0.55
	909.91	914.63	0.74	0.51
	826.04	927.65	1.20	0.81

Reported SAR for Body (Back)*

Antenna	Power (mW)	CH. Freq (MHz)	Body SAR1g (W/Kg)	Body SAR10g (W/Kg)
ANT-868-CW-QW	872.97	902.40	1.15	0.78
	909.91	914.63	0.70	0.48
	826.04	927.65	1.15	0.79

* Reported SAR is scaled for power drift, duty cycle and tune up procedure.

EXHIBIT 4. SAR SYSTEM CONFIGURATION

4.1. DASY5 SYSTEM OVERVIEW

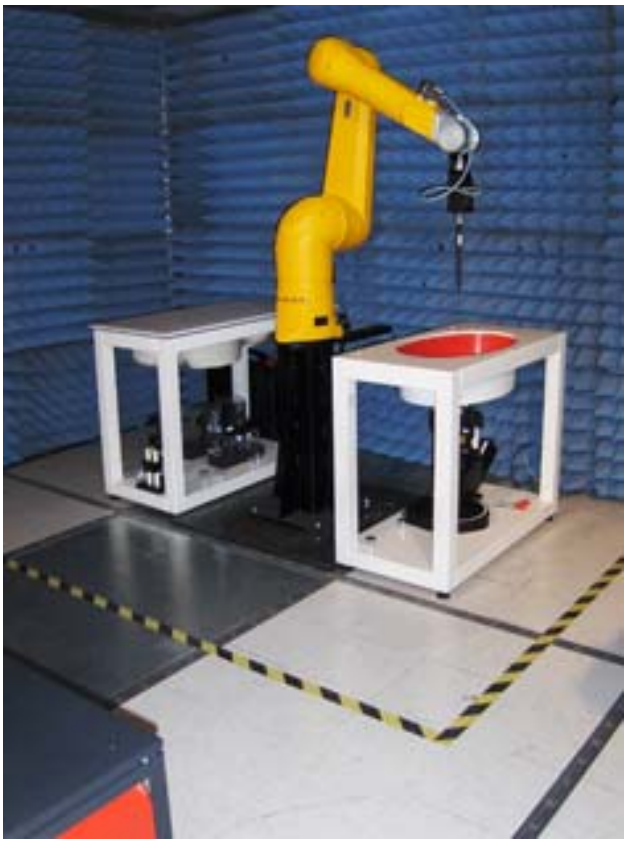

DASY5 System Specification

Positioning Equipment	Computer
DASAY5 Measurement Server	Type: HP Compaq dc7800p Convertible
Data Acquisition Electronics (DAE)	CPU : Intel® Core™ 2 Duo E8500
Light Beam Unit	Memory : 2GB RAM
Device Holder	Operating System : Windows XP Professional
Robot (STAUBLI TX90)	Monitor : HP L1950g LCD

1. DASY5 Measurement Server

The DASY5 measurement server is based on a PC/104 CPU board with a 400MHz Intel ULV Celeron, 128MB chipdisk and 128MB RAM. The necessary circuits for communication with the DAE4 (or DAE3) electronics box, as well as the 16 bit AD converter system for optical detection and digital I/O interface are contained on the DASY5 I/O board, which is directly connected to the PC/104 bus of the CPU board.

The measurement server performs all real-time data evaluation of field measurements and surface detection, controls robot movements and handles safety operation. The PC operating system cannot interfere with these time critical processes. All connections are supervised by a watchdog, and disconnection of any of the cables to the measurement server will automatically disarm the robot and disable all program-controlled robot movements. Furthermore, the

measurement server is equipped with an expansion port which is reserved for future applications. Please note that this expansion port does not have a standardized pinout, and therefore only devices provided by SPEAG can be connected. Devices from any other supplier could seriously damage the measurement server.

2. Data Acquisition Electronics

The data acquisition electronics (DAE4 or DAE3) consist of a highly sensitive electrometer-grade preamplifier with auto-zeroing, a channel and gain-switching multiplexer, a fast 16 bit AD-converter and a command decoder with a control logic unit. Transmission to the measurement server is accomplished through an optical downlink for data and status information, as well as an optical uplink for commands and the clock.

The mechanical probe mounting device includes two different sensor systems for frontal and sideways probe contacts. They are used for mechanical surface detection and probe collision detection.

The input impedance of both the DAE4 as well as of the DAE3 box is 200MOhm; the inputs are symmetrical and floating. Common mode rejection is above 80 dB.

3. Dosimetric Probes

These probes are specially designed and calibrated for use in liquids with high permittivity. They should not be used in air, since the spherical isotropy in air is poor (-2 dB). The dosimetric probes have special calibrations in various liquids at different frequencies.

ES3DV3 Isotropic E-Filed Probe

Construction	Symmetrical design with triangular core Interleaved sensors Built-in shielding against static charges PEEK enclosure material (resistant to organic solvents, e.g., DGBE)
Calibration	Basic Broad Band Calibration in air Conversion Factors (CF) for HSL 900 and HSL 1750 Additional CF for other liquids and frequencies
Frequency	10 MHz to 4 GHz Linearity ± 0.2 dB (30 MHz to 4 GHz)
Directivity	± 0.2 dB in HSL (rotation around probe axis) ± 0.3 dB in tissue material (rotation normal to probe axis)
Dynamic Range	5 µW/g to > 100 mW/g Linearity: ± 0.2 dB
Dimensions	Overall length: 330 mm (Tip: 20 mm) Tip diameter: 3.9 mm (Body: 12 mm) Distance from probe tip to dipole centers: 2.0 mm

EX3DV4 Isotropic E-Filed Probe

Construction	Symmetrical design with triangular core Built-in shielding against static charges PEEK enclosure material (resistant to organic solvents, e.g., DGBE)
Calibration	Basic Broad Band Calibration in air Conversion Factors (CF) for HSL 900 and HSL 1750 Additional CF for other liquids and frequencies
Frequency	10 MHz to > 6 GHz Linearity: ± 0.2 dB (30 MHz to 6 GHz)
Directivity	± 0.3 dB in HSL (rotation around probe axis) ± 0.5 dB in tissue material (rotation normal to probe axis)
Dynamic Range	10 µW/g to > 100 mW/g Linearity: ± 0.2 dB (noise: typically < 1 µW/g)
Dimensions	Overall length: 330 mm (Tip: 20 mm) Tip diameter: 2.5 mm (Body: 12 mm) Typical distance from probe tip to dipole centers: 1 mm

DASY5 SAR SYSTEM block diagram

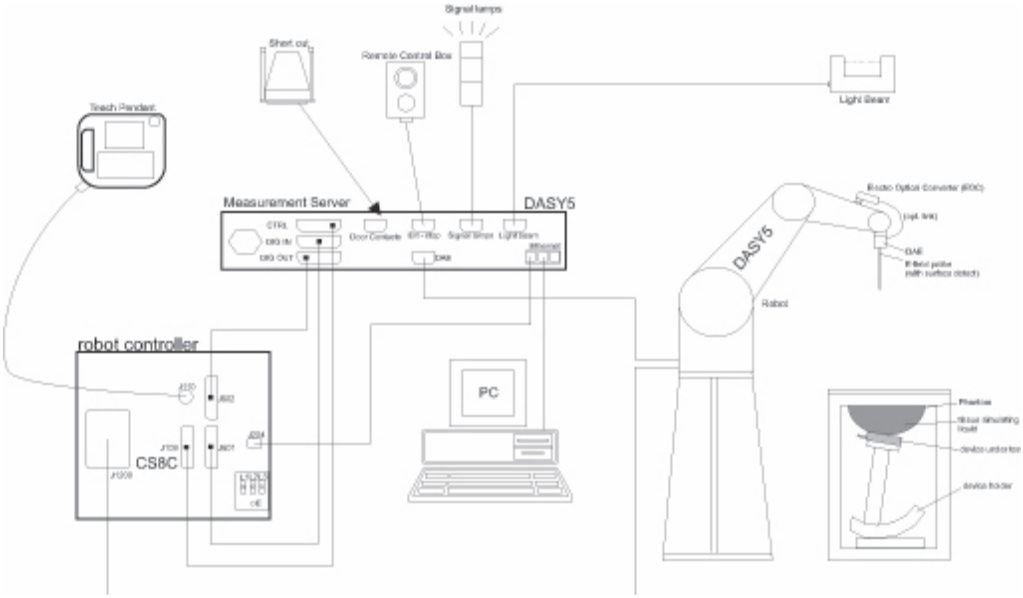

4.2. SAR TEST PHANTOMS

SAM Twin Phantom

For Head mounted devices placed next to the ear, the phantom used in the evaluation of the RF exposure of the user of the wireless device is an IEEE P1528 compliant SAM Twin phantom, shaped like a human head and filled with a mixture simulating the dielectric characteristics of the brain. A left sided head and a right sided head are evaluated to determine the worst case orientation for SAR.

ELI 4.0 Phantom

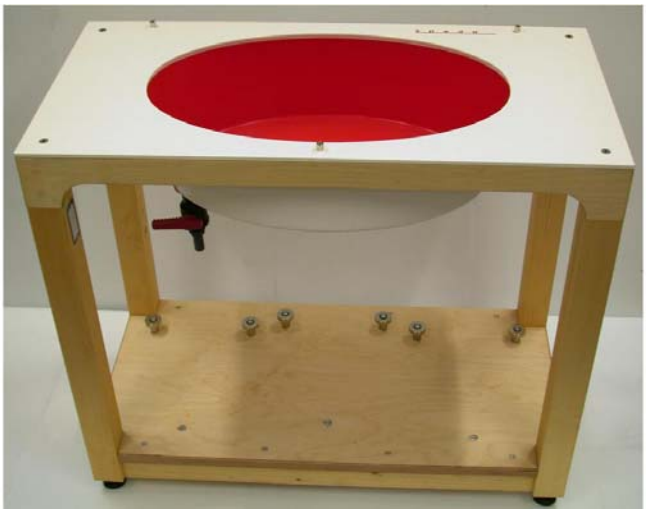

For body mounted and frontal held push-to-talk devices, an IEC 62209-2 compliant Oval Flat Phantom (ELI 4.0) with a base plate thickness of 2mm is used.

EXHIBIT 5. SAR DATA ACQUISITION METHODOLOGY

5.1. SAR MEASUREMENT PROCEDURE

The goal of the measurement process is to scan the phantom over a selected area in order to find the region of highest levels of RF energy and then to obtain a single value for the peak spatial-average of SAR over a volume that would contain one gram (in the shape of a cube) of biological tissue. The test procedure, of course, measures SAR in the simulated tissue.

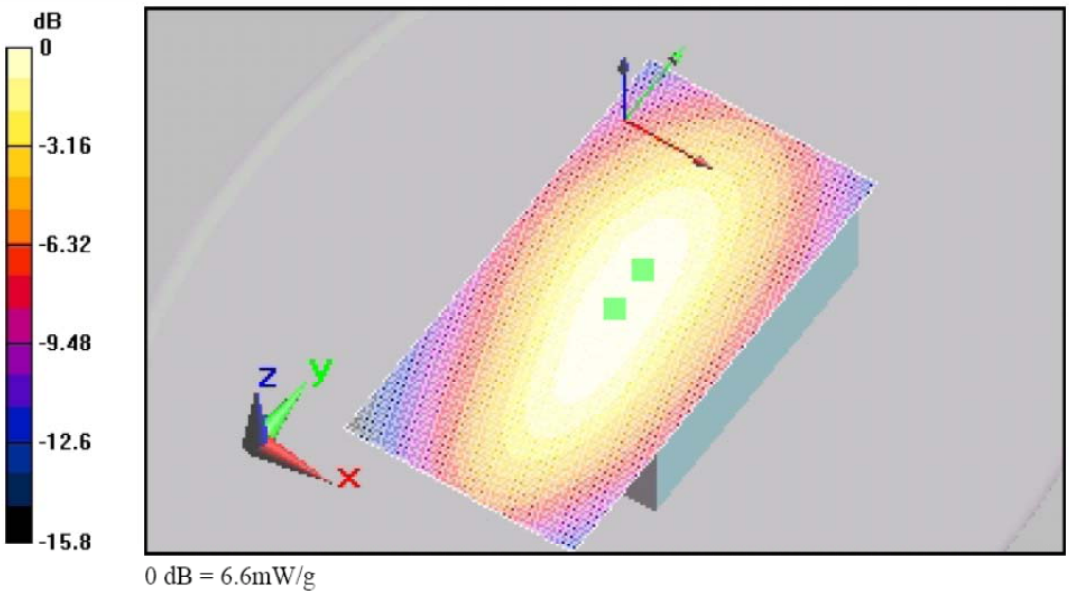

< Area scan >

The software requests the user to move the probe to locations at two extreme corners of a rectangle that encloses the area to be scanned. An arbitrary origin and the spatial resolution for the scan are also specified. Under program control, the scan is performed automatically by the robot-guided probe.

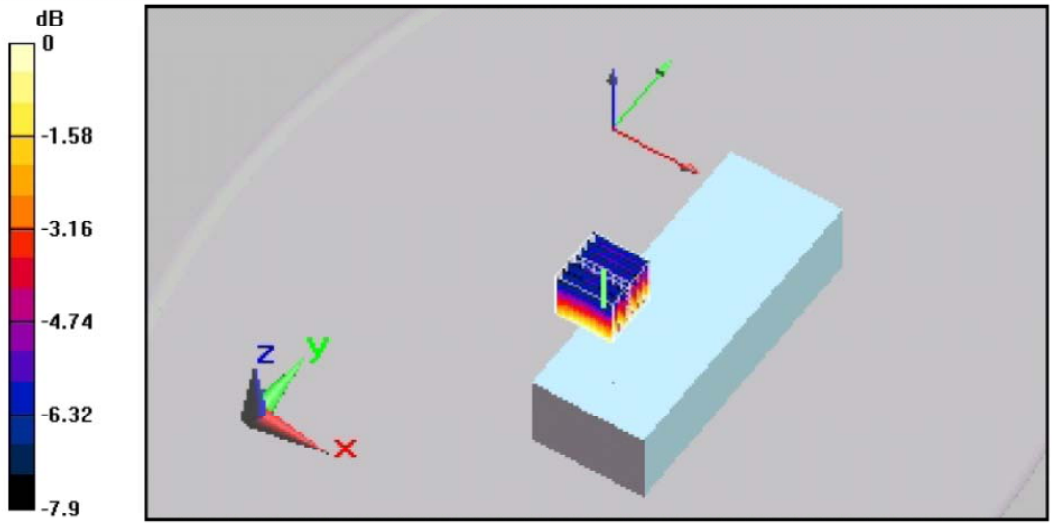

0 dB = 6.47mW/g

< Zoom Scan >

The DASY5 software includes all numerical procedures necessary to evaluate the spatial peak SAR values.

Based on the Draft: SCC-34, SC-2, WG-2 - Computational Dosimetry, IEEE P1529/D0.0 (Draft Recommended Practice for Determining the Spatial-Peak Specific Absorption Rate (SAR) Associated with the Use of Wireless Handsets - Computational Techniques), a new algorithm has been implemented. The spatial-peak SAR can be computed over any required mass.

The base for the evaluation is a "cube" measurement in a volume of (30mm)3 (7x7x7 points). The measured volume must include the 1 g and 10 g cubes with the highest averaged SAR values. For that purpose, the center of the measured volume is aligned to the interpolated peak SAR value of a previously performed area scan. If the 10g cube or both cubes are not entirely inside the measured volumes, the system issues a warning regarding the evaluated spatial peak values within the postprocessing engine (SEMCAD X). This means that if the measured volume is shifted, higher values might be possible. To get the correct values you can use a finer measurement grid for the area scan. In complicated field distributions, a large grid spacing for the area scan might miss some details and give an incorrectly interpolated peak location.

The entire evaluation of the spatial peak values is performed within the postprocessing engine (SEMCAD X). The system always gives the maximum values for the 1 g and 10 g cubes. The algorithm to find the cube with highest averaged SAR is divided into the following stages:

1. extraction of the measured data (grid and values) from the Zoom Scan
2. calculation of the SAR value at every measurement point based on all stored data (A/D values and measurement parameters)
3. generation of a high-resolution mesh within the measured volume
4. interpolation of all measured values from the measurement grid to the high-resolution grid
5. extrapolation of the entire 3-D field distribution to the phantom surface over the distance from sensor to surface
6. calculation of the averaged SAR within masses of 1 g and 10 g

The significant parts are outlined in more detail within the following sections.

Interpolation, Extrapolation and Detection of Maxima

The probe is calibrated at the center of the dipole sensors which is located 1 to 2.7mm away from the probe tip. During measurements, the probe stops shortly above the phantom surface, depending on the probe and the surface detecting system. Both distances are included as parameters in the probe configuration file. The software always knows exactly how far away the measured point is from the surface. As the probe cannot directly measure at the surface, the values between the deepest measured point and the surface must be extrapolated.

In DASY5, the choice of the coordinate system defining the location of the measurement points has no influence on the uncertainty of the interpolation, Maxima Search and extrapolation routines. The interpolation, extrapolation and maximum search routines are all based on the modified Quadratic Shepard's method.

Thereby, the interpolation scheme combines a least-square fitted function method and a weighted average method which are the two basic types of computational interpolation and approximation. The DASY5 routines construct a once-continuously differentiable function that interpolates the measurement values as follows:

- For each measurement point a trivariate (3-D) / bivariate (2-D) quadratic is computed. It interpolates the measurement values at the data point and forms a least-square fit to neighboring measurement values.
- the spatial location of the quadratic with respect to the measurement values is is attenuated by an inverse distance weighting. This is performed since the calculated quadratic will fit measurement values at nearby points more accurate than at points located further away.
- After the quadratics are calculated for at all measurement points, the interpolating function is calculated as a weighted average of the quadratics.

There are two control parameters that govern the behavior of the interpolation method . One specifies the number of measurement points to be used in computing the least-square fits for the local quadratics. These measurement points are the ones nearest the input point for which the quadratic is being computed. The second parameter specifies the number of measurement points that will be used in calculating the weights for the quadratics to produce the final function. The input data points used there are the ones nearest the point at which the interpolation is desired. Appropriate defaults are chosen for each of the control parameters

The trivariate quadratics that have been previously computed for the 3-D interpolation and whose input data are at the closest distance from the phantom surface, are used in order to extrapolate the fields to the surface of the phantom.

In order to determine all the field maxima in 2-D (Area Scan) and 3-D (Zoom Scan), the measurement grid is refined by a default factor of 10 and the interpolation function is used to evaluate all field values between corresponding measurement points. Subsequently, a linear search is applied to find all the candidate maxima. In a last step, non physical maxima are removed and only those maxima which are within 2 dB of the global maximum value are retained.

Important: To be processable by the interpolation/extrapolation scheme, the Area Scan requires at least 6 measurement points. The Cube Scan requires at least 10 measurement points to allow an application of these algorithms.

In the Area Scan, the gradient of the interpolation function is evaluated to find all the extrema of the SAR distribution. The uncertainty on the locations of the extrema is less than 1/20 of the grid size. Only local maxima within -2 dB of the global maximum are searched and passed for the Cube Scan measurement.

In the Cube Scan, the interpolation function is used to extrapolate the Peak SAR from the lowest measurement points to the inner phantom surface (the extrapolation distance). The uncertainty increases with the extrapolation distance. To keep the uncertainty within 1% for the 1 g and 10 g cubes, the extrapolation distance should not be larger than 5mm.

Averaging and Determination of Spatial Peak SAR

The interpolated data is used to average the SAR over the 1g and 10g cubes by spatially discretizing the entire measured volume. The resolution of this spatial grid used to calculate the averaged SAR is 1mm or about 42875 interpolated points. The resulting volumes are defined as cubical volumes containing the appropriate tissue parameters that are centered at the location. The location is defined as the center of the incremental volume (voxel).

The spatial-peak SAR must be evaluated in cubical volumes containing a mass that is within 5% of the required mass. The cubical volume centered at each location, as defined above, should be expanded in all directions until the desired value for the mass is reached, with no surface boundaries of the averaging volume extending beyond the outermost surface of the considered region. In addition, the cubical volume should not consist of more than 10% of air. If these conditions are not satisfied then the center of the averaging volume is moved to the next location. Otherwise, the exact size of the final sampling cube is found using an inverse polynomial approximation algorithm, leading to results with improved accuracy. If one boundary of the averaging volume reaches the boundary of the measured volume during its expansion, it will not be evaluated at all. Reference is kept of all locations used and those not used for averaging the SAR. All average SAR values are finally assigned to the centered location in each valid averaging volume.

All locations included in an averaging volume are marked to indicate that they have been used at least once. If a location has been marked as used, but has never been assigned to the center of a cube, the highest averaged SAR value of all other cubical volumes which have used this location for averaging, is assigned to this location. Only those locations that are not part of any valid averaging volume should be marked as unused. For the case of an unused location, a new averaging volume must be constructed which will have the unused location centered at one surface of the cube. The remaining five surfaces are expanded evenly in all directions until the required mass is enclosed, regardless of the amount of included air. Of the six possible cubes with one surface centered on the unused location, the smallest cube is used, which still contains the required mass.

If the final cube containing the highest averaged SAR touches the surface of the measured volume, an appropriate warning is issued within the postprocessing engine.

Evaluation Errors

4. Cube shape

The mentioned procedures search for the maximum averaged 1g and 10g volumes of cubical shape according to the ANSII and ICNIRP standard. A density of 1000 kg/m3 is used to represent the head tissue density and not the tissue simulating liquid density.

5. Extrapolation

For the extrapolation the distance must be specified in the Area Scan and Zoom Scan Jobs. The distance is defined as the distance between the probe sensor center and the phantom surface. The recommended distance is 4-5 mm.

6. Boundary effects

The dosimetric probes are calibrated in a gradient field with energy flow and decay in direction of the probe axis. During calibration the probe tip is completely surrounded by the simulating solution. If the probe is used in the immediate vicinity of a media boundary, the field in the probe is altered due to interaction with the field in the boundary and the probe sensitivity changes. The influence of the boundary effect depends on the probe construction, the media parameters and the probe orientation with respect to the boundary. It disappears at a distance of 1mm (E1D-probe) to 5mm (ET3D-probes) between the probe tip and the boundary. The boundary effect must be considered in the extrapolation to the surface.

EXHIBIT 6. MEASUREMENTS, EXAMINATIONS & TEST DATA

6.1. TEST CONFIGURATIONS

D.U.T. Information		Condition		
Product Name	Safe Remote Control	**Robot Type**	6 Axis	
Model Number	SRC-002-901	**Scan Type**	SAR – Area/Zoom/Att. Vs Depth	
Serial Number	N/A	**Measured Field**	E	
Frequency Band [MHz]	902.4-927.65 MHZ	**Phantom Type**	2_{mm} base Flat Phantom	
Frequency Tested [MHz]	902.40, 914.63, 927.65 MHz	**Phantom Position**	Waist	
Maximum Conducted Power	30 dBm	**Room Temperature [°C]**	21 ± 1	22 ± 1
Antenna Type	Linx Technologies Inc ¼ wave whip, straight antenna, model: ANT-868-CW-QW, 1.6 dBi peak gain.	**Room Humidity [%]**	32.4 ± 10	33 ± 10
Modulation	FHSS	**Tissue Temperature [°C]**	20.4 ± 1	20.5 ± 1
Worst Case Duty Cycle	66.66 %			
Duty Cycle Tested	100%			
Source(or Usage)-Based Time-Average Factor	100%			

900 MHz Tissue (Feb 09, 2023)

Type of Tissue	Muscle
Test Frequency [MHz]	900
Target Conductivity [S/m]	1.05
Measured Conductivity [S/m]	1.00(-5.0%)
Target Dielectric Constant	55.0
Measured Dielectric Constant	54.2(-1.48%)
Penetration Depth (Plane Wave Excitation) [mm]	39.5
Probe Model Number	EX3DV4
Probe Serial Number	3673
Probe Orientation	Isotropic
Probe Sensor Offset [mm]	1.4
Probe Tip Diameter [mm]	2.5
Conversion Factor (γ)	9.13 (±12.0%)

900 MHz Tissue (Mar 08, 2023)

Type of Tissue	Muscle
Test Frequency [MHz]	900
Target Conductivity [S/m]	1.05
Measured Conductivity [S/m]	1.02(-2.8%)
Target Dielectric Constant	55.0
Measured Dielectric Constant	54.6(-0.7%)
Penetration Depth (Plane Wave Excitation) [mm]	38.3
Probe Model Number	EX3DV4
Probe Serial Number	3673
Probe Orientation	Isotropic
Probe Sensor Offset [mm]	1.4
Probe Tip Diameter [mm]	2.5
Conversion Factor (γ)	9.13 (±12.0%)

6.2. GENERAL TEST SETUP

Equipment Configuration

Power and signal distribution, grounding, interconnecting cabling and physical placement of equipment of a test system shall simulate the typical application and usage in so far as is practicable, and shall be in accordance with the relevant product specifications of the manufacturer.

The configuration that tends to maximize the D.U.T's emission or minimize its immunity is not usually intuitively obvious and in most instances selection will involve some trial and error testing. For example, interface cables may be moved or equipment re-orientated during initial stages of testing and the effects on the results observed.

Only configurations within the range of positions likely to occur in normal use need to be considered.

The configuration selected shall be fully detailed and documented in the test report, together with the justification for selecting that particular configuration.

Exercising Equipment

The exercising equipment and other auxiliary equipment shall be sufficiently decoupled from the D.U.T. so that the performance of such equipment does not significantly influence the test results.

6.3. PHOTOGRAPHS OF TISSUE DEPTH AND EUT FOR BODY SAR CONFIGURATION

900MHz Tissue Liquid

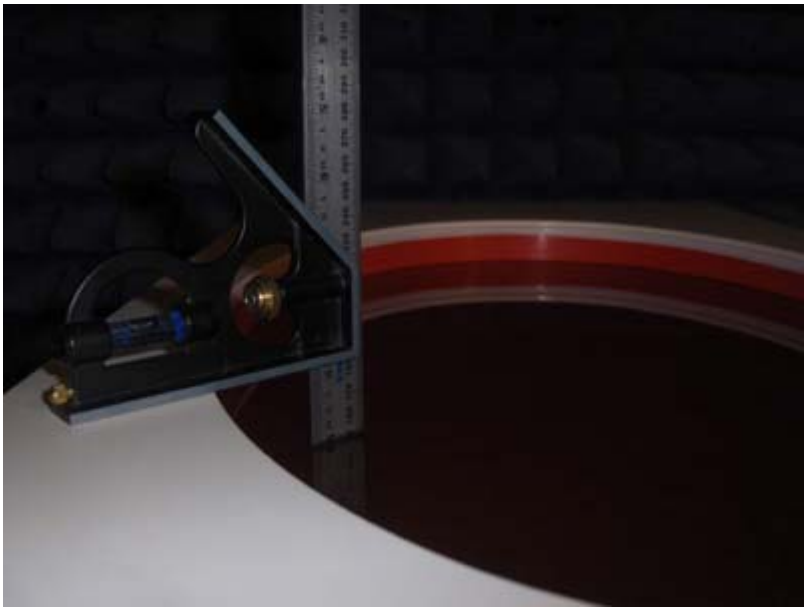

< Phantom filled with body tissue liquid: liquid level = 150mm ± 5mm >

Body Configuration for EUT

<Touch Position, Front>

<Touch Position, Back>

Remark: Distance between the EUT and the phantom = 0 mm

EXHIBIT 7. SAR MEASUREMENT SYSTEM VERIFICATION

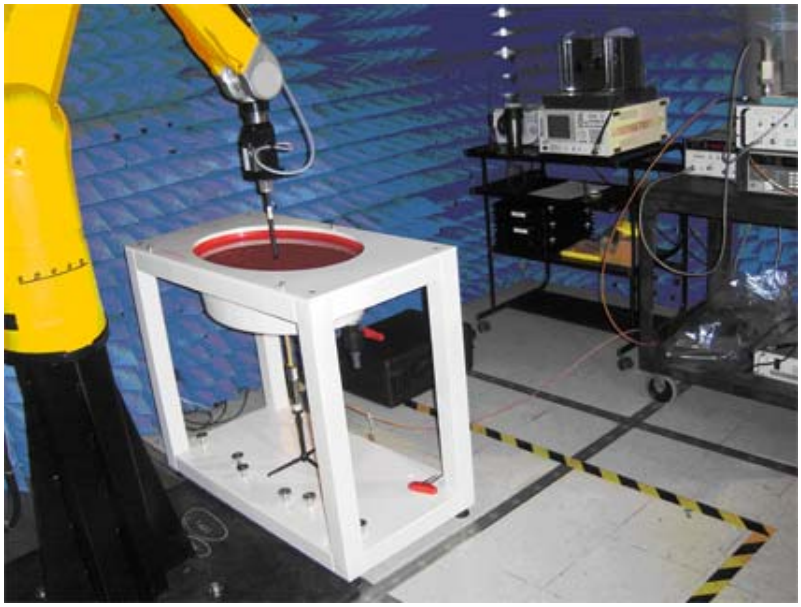

7.1. STANDARD SOURCE

A half-wave dipole is positioned below the bottom of the phantom and centered with its axis parallel to the longest side of the phantom. The distance between the liquid filled phantom bottom surface and the center of the dipole axis, *s*, is chosen as specified IEEE 1528 at the specific test frequency (i.e. 15 mm at 835 MHz). A low loss and low dielectric constant spacer is used to establish the correct distance between the top surface of the dipole and the bottom surface of the phantom.

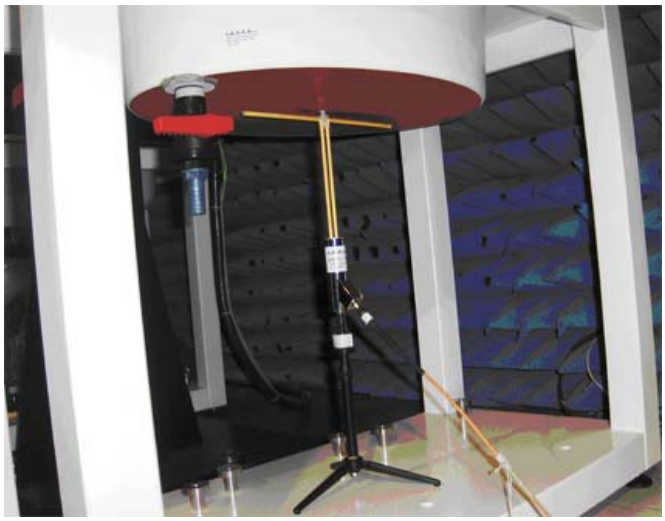

7.2. STANDARD SOURCE INPUT POWER MEASUREMENT

The system validation is performed as shown below or in Figure 7.1 in IEEE 1528.

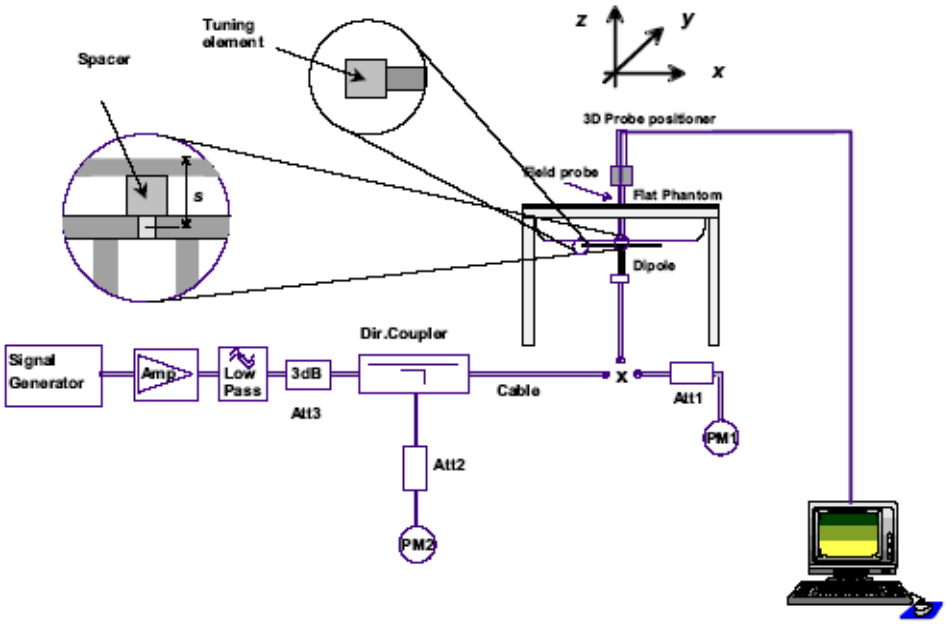

First the power meter PM1 (including attenuator Att1) is connected to the cable to measure the forward power at the location of the dipole connector (X). The signal generator is adjusted for the desired forward power at the dipole connector (taking into account the attenuation of Att1) as read by power meter PM2. After connecting the cable to the dipole, the signal generator is readjusted for the same reading at power meter PM2. If the signal generator does not allow adjustment in 0.01dB steps, the remaining difference at PM2 must be taken into consideration. PM3 records the reflected power from the dipole to ensure that the value is not changed from the previous value. The reflected power was verified to be at least 20dB below the forward power.

7.3. SYSTEM VALIDATION PROCEDURE

A complete 1g-averaged SAR measurement is performed. The measured 1g-averaged SAR value is normalized to a forward power of 1W to a half-wave dipole and compared with the reference SAR value for the reference dipole and flat phantom shown in columns 2 and 3 of Table 7.1 in IEEE 1528.

7.4. VERIFICATION RESULTS

Dipole D900V2 – SN: 1d080 Reference SAR values*

		SAR1g			SAR10g		
	Frequency (MHz)	Reference (mw/g)	Measured *	Delta %	Reference (mw/g)	Measured	Delta %
Body	900	11.2	10.32	-7.03%	7.24	6.68	-7.73%

* SAR values are normalized to a forward power of 1W.

Dipole D900V2 – SN: 1d080 Reference SAR values*(Mar 08, 2023)

		SAR1g			SAR10g		
	Frequency (MHz)	Reference (mw/g)	Measured *	Delta %	Reference (mw/g)	Measured	Delta %
Body	900	11.1	11.2	0.9%	7.24	7.24	0.00%

* SAR values are normalized to a forward power of 1W.

Verification at 900 MHz Body (Feb 09, 2023)

File Name: Sys.Perf.Check-900MHz_Body.da52:0

DUT: Dipole 900 MHz D900V2; Type: D900V2; Serial: 1d080

Communication System: UID 0, CW (0); Frequency: 900 MHz; Duty Cycle: 1:1
Medium parameters used: f = 900 MHz; σ = 0.997 S/m; ε_r = 54.226; ρ = 1000 kg/m^3 ; Phantom section: Flat Section ; Measurement Standard: DASY5 (IEEE/IEC/ANSI C63.19-2011)

DASY Configuration:

- Probe: EX3DV4 - SN3673; ConvF(9.13, 9.13, 9.13; Calibrated: 8/30/2022;
- Sensor-Surface: 1.4mm (Mechanical Surface Detection)
- Electronics: DAE4 Sn874; Calibrated: 8/25/2022
- Phantom: ELI 4.0; Type: QD OVA 001 BB; Serial: 1057
- DASY52 52.10.0(1446); SEMCAD X 14.6.10(7417)

System Verification at 900MHz_Body/d=15mm, Pin=250mW, dist=1.4mm (EX-Probe)/Zoom Scan (7x7x7) (7x7x7)/Cube 0: Measurement grid: dx=5mm, dy=5mm, dz=5mm
Reference Value = 52.27 V/m; Power Drift = 0.23 dB
Peak SAR (extrapolated) = 4.03 W/kg
SAR(1 g) = 2.58 W/kg; SAR(10 g) = 1.67 W/kg
Maximum value of SAR (measured) = 3.50 W/kg

System Verification at 900MHz_Body/d=15mm, Pin=250mW, dist=1.4mm (EX-Probe)/Area Scan (61x81x1): Interpolated grid: dx=1.500 mm, dy=1.500 mm
Maximum value of SAR (interpolated) = 3.49 W/kg

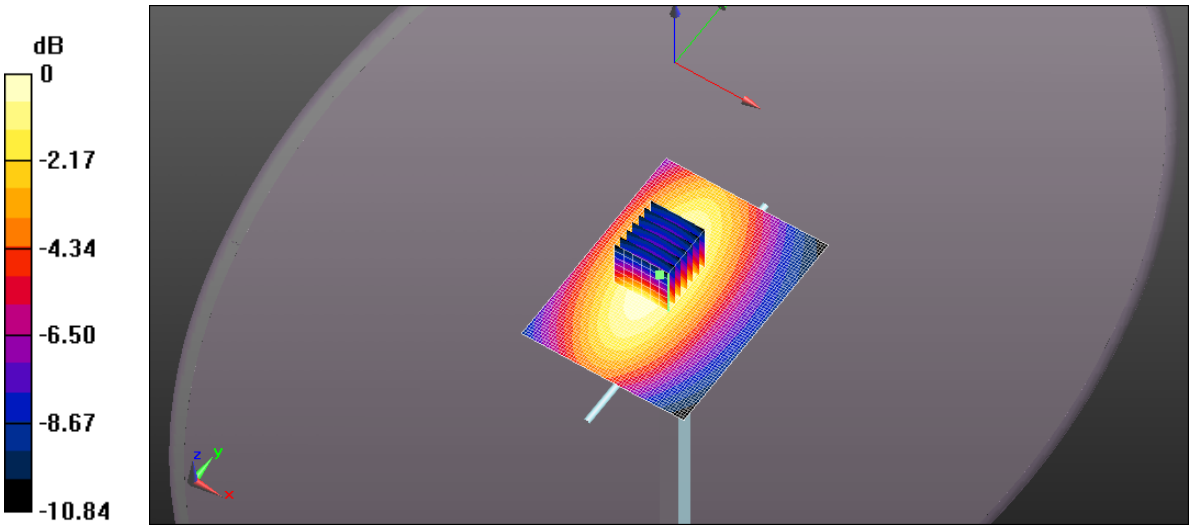

0 dB = 3.50 W/kg = 5.44 dBW/kg

Verification at 900 MHz Body (Mar 08, 2023)

File Name: Sys.Perf.Check-900MHz_Body(2).da52:0

DUT: Dipole 900 MHz D900V2; Type: D900V2; Serial: 1d080

Communication System: UID 0, CW (0); Frequency: 900 MHz; Duty Cycle: 1:1
Medium parameters used: f = 900 MHz; σ = 1.025 S/m; ε_r = 54.601; ρ = 1000 kg/m^3 ; Phantom section: Flat Section ; Measurement Standard: DASY5 (IEEE/IEC/ANSI C63.19-2011)

DASY Configuration:

- Probe: EX3DV4 - SN3673; ConvF(9.13, 9.13, 9.13; Calibrated: 8/30/2022;
- Sensor-Surface: 1.4mm (Mechanical Surface Detection)
- Electronics: DAE4 Sn874; Calibrated: 8/25/2022
- Phantom: ELI 4.0; Type: QD OVA 001 BB; Serial: 1057
- DASY52 52.10.0(1446); SEMCAD X 14.6.10(7417)

System Verification at 900MHz_Body/d=15mm, Pin=250mW, dist=1.4mm (EX-Probe)/Zoom Scan (7x7x7) (7x7x7)/Cube 0: Measurement grid: dx=5mm, dy=5mm, dz=5mm
Reference Value = 51.13 V/m; Power Drift = 0.43 dB
Peak SAR (extrapolated) = 4.37 W/kg
SAR(1 g) = 2.8 W/kg; SAR(10 g) = 1.81 W/kg
Maximum value of SAR (measured) = 3.82 W/kg

System Verification at 900MHz_Body/d=15mm, Pin=250mW, dist=1.4mm (EX-Probe)/Area Scan (61x81x1): Interpolated grid: dx=1.500 mm, dy=1.500 mm
Maximum value of SAR (interpolated) = 3.74 W/kg

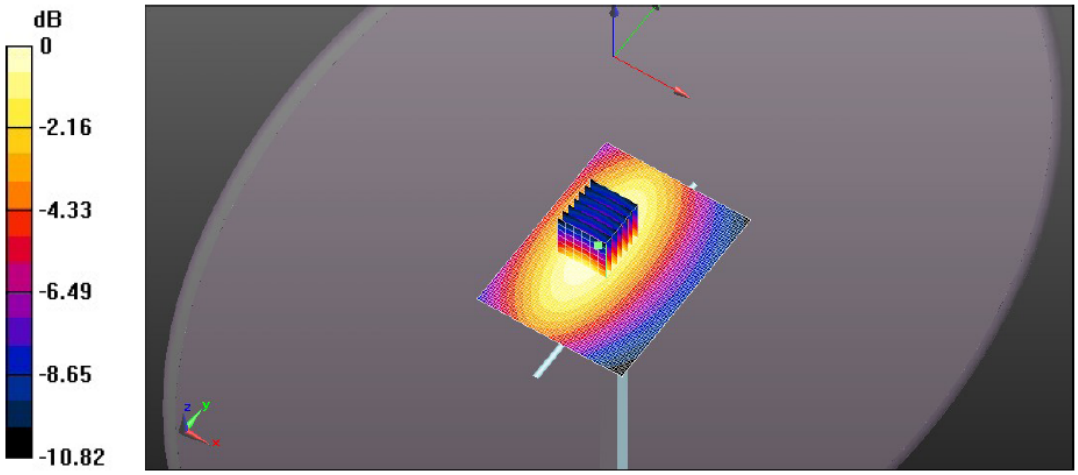

0 dB = 3.82 W/kg = 5.82 dBW/kg

EXHIBIT 8. D.U.T. POWER MEASUREMENT

Whenever possible, a conducted power measurement is performed. To accomplish this, we utilize a fully charged battery, a calibrated power meter and a cable adapter provided by the manufacturer. The data of the cable and related circuit losses are also provided by the manufacturer. The power measurement is then performed across the operational band and the channel with the highest output power is recorded.

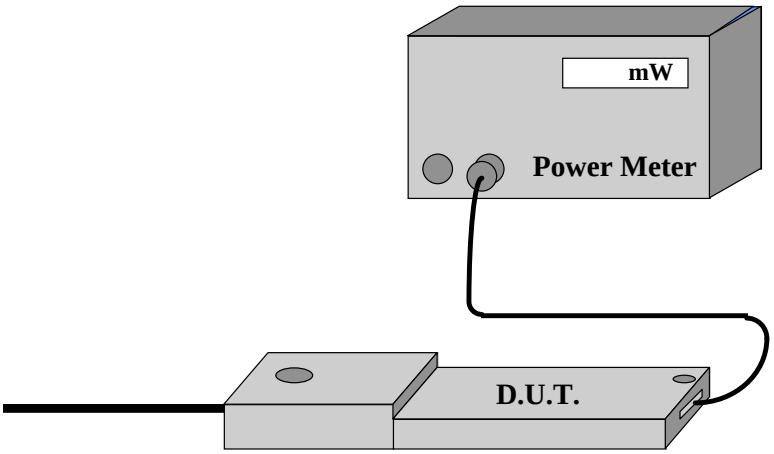

Power measurement is performed before and after the SAR to verify if the battery was delivering full power at the time of testing. A difference in output power would determine a need for battery replacement and to repeat the SAR test.

RF Conducted output power measurement

Scaling Factors user to obtain Reported SAR data are derived from the maximum tune-up power divided by the measured average conducted power. The measured SAR is only scaled up to obtain the Reported SAR.

8.1. RF CONDUCTED OUTPUT POWER MEASUREMENT

Channel	Frequency	Power	
	MHz	dBm	mW
Low	902.40	29.41	872.97
Mid	914.63	29.59	909.91
High	927.65	29.17	826.04

EXHIBIT 9. TISSUE DIELECTRIC PARAMETER CALIBRATION

9.1. SIMULATED TISSUE

Simulated Tissue: Suggested in a paper by George Hartsgrove and colleagues in University of Ottawa Ref.: Bioelectromagnetics 8:29-36 (1987)

Ingredient	Quantity
Water	40.4 %
Sugar	56.0 %
Salt	2.5 %
HEC	1.0 %
Bactericide	0.1 %

Table 9.1 Example of composition of simulated tissue

This simulated tissue is mainly composed of water, sugar and salt. At higher frequencies, in order to achieve the proper conductivity, the solution does not contain salt. Also, at these frequencies, D.I. water and alcohol is preferred.

Target Frequency (MHz)	Head		Body	
	ε_r	σ (S/m)	ε_r	σ (S/m)
150	52.3	0.76	61.9	0.80
300	45.3	0.87	58.2	0.92
450	43.5	0.87	56.7	0.94
835	41.5	0.90	55.2	0.97
900	41.5	0.97	55.0	1.05
915	41.5	0.98	55.0	1.06
1450	40.5	1.20	54.0	1.30
1610	40.3	1.29	53.8	1.40
950 – 2000	40.0	1.40	53.3	1.52
2450	39.2	1.80	52.7	1.95
3000	38.5	2.40	52.0	2.73
5800	35.3	5.27	48.2	6.00

(ε_r = relative permittivity, σ = conductivity and ρ = 1000 Kg/m^3)*

* The actual mass density of the equivalent tissue varies based on the composition of the tissue from 990 Kg/m^3 to 1,300 Kg/m^3.

9.2. MEASUREMENT OF ELECTRICAL CHARACTERISTICS OF SIMULATED TISSUE

HP Dielectric Strength Probe System (open-ended coaxial transmission-line probe/sensor) was used.

Equipment set-up

The equipment consists of a probe connected to one port of a vector network analyzer. The probe is an open-ended coaxial line, as shown in Figure 9.2.1.1. Cylindrical coordinates (ρ, ϕ, z) are used where ρ is the radial distance from the axis, ϕ is the angular displacement around the axis, z is the displacement along the axis, a is the inner conductor radius, and b is the outer conductor inner radius.

The sample holder is a non-metallic container that is large compared with the size of the probe immersed in it. A probe with an outer diameter b of 2 to 4 mm is suitable for the measurement of tissue-equivalent materials in the 300 MHz to 3 GHz frequency range. This probe size is commensurate with sample volumes of 50 cc or higher. Larger probes of up to 7 mm outer diameter b may be used with larger sample volumes. A flange is typically included to better represent the infinite ground-plane assumption used in admittance calculations.

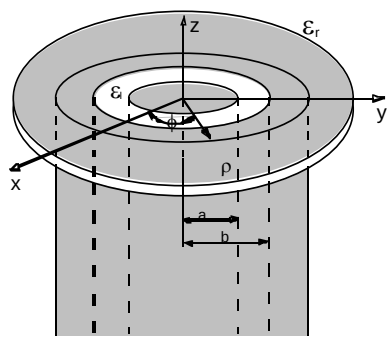

Figure 0. An open-ended coaxial probe with inner and outer radii a and b, respectively

The accuracy of the short-circuit measurement should be verified for each calibration at a number of frequencies. A short circuit can be achieved by gently pressing a piece of aluminum foil against the open end. For best electrical contact, the probe end should be flat and free of oxidation. Larger the sensors generally have better foil short-circuit repeatability. It is possible to obtain good contact with some commercial 4.6 mm probes using the metal-disk short-circuit supplied with the kit. For best repeatability, it may be necessary to press the disk by hand.

The network analyzer is configured to measure the magnitude and phase of the admittance. A one-port reflection calibration is performed at the plane of the probe by placing materials for which the reflection coefficient can be calculated in contact with the probe. Three standards are needed for the calibration, typically a short circuit, air, and de-ionized water at a well-defined temperature (other reference liquids such as methanol or ethanol may be used for calibration). The calibration is a key part of the measurement procedure, and it is therefore important to ensure that it has been performed correctly. It can be checked by re-measuring the short circuit to ensure that a reflection coefficient of Γ = -1.0 (linear units) is obtained consistently.

Measurement procedure

a) Configure and calibrate the network analyzer and probe system.

b) Place the sample in a non-metallic container and immerse the probe. A fixture or clamp is recommended to stabilize the probe, mounted such that the probe face is at an angle with respect to the liquid surface to minimize trapped air bubbles beneath the flange.

c) Measure the complex admittance with respect to the probe aperture.

d) Compute the complex relative permittivity $\varepsilon_r = \varepsilon_r' - j\sigma/\omega\varepsilon_0$.

9.3. SIMULATED TISSUE MEASUREMENT RESULTS

Tissue calibration type	HP Dielectric Strength probe System (M/N: 85070C)	HP Dielectric Strength probe System (M/N: 85070C)
Tissue calibration date [MM/DD/YYYY]	09/02/2023	08/03/2023
Tissue calibrated by	Pedro G. Moreira	Pedro G. Moreira
Room temperature [°C]	21	22
Room humidity [%]	32.4	33
Simulated tissue temperature (°C]	20.4	20.5
Tissue calibration frequency [MHz]	900	900
Tissue Type	Muscle	Muscle
Target conductivity [S/m]	1.05	1.05
Target dielectric constant	55.0	55.0
Composition (by weight) [%]	DI Water (51.0 %) Sugar (48.0 %) Salt (1.1 %) HEC (0.13 %) Bactericide (0.44 %)	DI Water (51.0 %) Sugar (48.0 %) Salt (1.1 %) HEC (0.13 %) Bactericide (0.44 %)
Measured conductivity [S/m]	1.00(-5.00%)	1.02(-2.85%)
Measured dielectric constant	54.2(-1.48%)	54.6(-0.72%)
Penetration depth (plane wave excitation) [mm]	39.5	38.3

900 Mhz Tissue (Feb 09, 2023)

	Frequency [MHz]	Meas. after 5min			DI Water at 23.5°C			Init. Meas.		
		ε'	ε''	σ [S/m]	ε'	ε''	σ [S/m]	ε'	ε''	σ [S/m]
Body	900.000	54.2260	19.9069	1.00	79.4247	3.7262	0.19	54.5441	20.2337	1.01
	915.000	54.0896	19.7211	1.00	79.4049	3.7385	0.19	54.4623	20.1831	1.03
	930.000	53.9043	19.7126	1.02	79.3694	3.7793	0.20	54.3164	20.1953	1.04

900 Mhz Tissue (Mar 08, 2023)

	Frequency [MHz]	Meas. after 5min			DI Water at 23.5°C			Init. Meas.		
		ε'	ε''	σ [S/m]	ε'	ε''	σ [S/m]	ε'	ε''	σ [S/m]
Body	900.000	54.6009	20.4671	1.02	79.6661	3.9237	0.20	54.6750	20.5474	1.03
	915.000	54.4200	20.4225	1.04	79.6829	3.9965	0.20	54.5076	20.5110	1.04
	930.000	54.1987	20.3561	1.05	79.6217	4.0426	0.21	54.3051	20.4657	1.06

EXHIBIT 10. SAR MEASUREMENT UNCERTAINTY

10.1. MEASUREMENT UNCERTAINTY EVALUATION FOR SAR TEST

Error Description	Uncertainty value	Prob. Dist.	Div.	(c_i) 1g	(c_i) 10g	Std. Unc. (1g)	Std. Unc. (10g)	(vi) v_{eff}
Measurement System								
Probe Calibration	±5.5 %	N	1	1	1	±5.5 %	±5.5 %	∞
Axial Isotropy	±4.7 %	R	$\sqrt{3}$	0.7	0.7	±1.9 %	±1.9 %	∞
Hemispherical Isotropy	±9.6 %	R	$\sqrt{3}$	0.7	0.7	±3.9 %	±3.9 %	∞
Boundary Effects	±1.0 %	R	$\sqrt{3}$	1	1	±0.6 %	±0.6 %	∞
Linearity	±4.7 %	R	$\sqrt{3}$	1	1	±2.7 %	±2.7 %	∞
System Detection Limits	±1.0 %	R	$\sqrt{3}$	1	1	±0.6 %	±0.6 %	∞
Readout Electronics	±0.3 %	R	$\sqrt{3}$	1	1	±0.3 %	±0.3 %	∞
Response Time	±0.8 %	N	1	1	1	±0.5 %	±0.5 %	∞
Integration Time	±2.6 %	R	$\sqrt{3}$	1	1	±1.5 %	±1.5 %	∞
RF Ambient Noise	±3.0 %	R	$\sqrt{3}$	1	1	±1.7 %	±1.7 %	∞
RF Ambient Reflections	±3.0 %	R	$\sqrt{3}$	1	1	±1.7 %	±1.7 %	∞
Probe Positioner	±0.4 %	R	$\sqrt{3}$	1	1	±0.2 %	±0.2 %	∞
Probe Positioning	±2.9 %	R	$\sqrt{3}$	1	1	±1.7 %	±1.7 %	∞
Max. SAR Eval.	±1.0 %	R	$\sqrt{3}$	1	1	±0.6 %	±0.6 %	∞
Test Sample Related								
Device Positioning	±2.9 %	N	1	1	1	±2.9 %	±2.9 %	145
Device Holder	±3.6 %	N	1	1	1	±3.6 %	±3.6 %	5
Power Drift	±5.0 %	R	$\sqrt{3}$	1	1	±2.9 %	±2.9 %	∞
Phantom and Setup								
Phantom Uncertainty	±4.0 %	R	$\sqrt{3}$	1	1	±2.3 %	±2.3 %	∞
Liquid Conductivity (target)	±5.0 %	R	$\sqrt{3}$	0.64	0.43	±1.8 %	±1.2 %	∞
Liquid Conductivity (meas.)	±2.5 %	N	1	0.64	0.43	±1.6 %	±1.1 %	∞
Liquid Permittivity (target)	±5.0 %	R	$\sqrt{3}$	0.6	0.49	±1.7 %	±1.4 %	∞
Liquid Permittivity (meas.)	±2.5 %	N	1	0.6	0.49	±1.5 %	±1.2 %	∞
Combined Std. Uncertainty						±10.7 %	±10.5 %	387
Expanded STD Uncertainty						**±21.4 %**	**±21.0 %**	

EXHIBIT 11. ADDITIONAL TEST INSTRUMENTS LIST

Name	Type	Serial Number (SN)	Calibration Date (or Due Date)
Vector Signal Generator	R&S SMJ-100A	100644	Due Date: Nov 07, 2023
SPEAG Validation Antenna (2450MHz)	D900V2	821	Due Date: Mar 14, 2024
SPEAG SAR Probe	EX3DV4	3673	Due Date: Aug 30, 2023
SPEAG DAE	DAE4 – SD 000 Do4 BJ	874	Due Date: Aug 25, 2023
Power Meter (HP) **Power Sensor 10MHz-18GHz**	Agilent E4419B HP 8481A	MY50000168 3318A19993	Due Date: Aug 25, 2023 Due Date: Nov 18, 2023
Directional Coupler (narda)	Model 3020A	35482	Cal on use
Spectrum Analyzer (HP)	8546A	110329	N/A
Microwave Power Devices RF Amplifier	GRF5058	1009	N/A

EXHIBIT 12. SAR MEASUREMENT DATA

See Appendix 1.

EXHIBIT 13. SAR CALIBRATION CERTIFICATE

See Appendix 2.

EXHIBIT 14. DUTY CYCLE MEASUREMENT PROCEDURE

See Appendix 3.