FCC TEST REPORT
FCC ID: 2A8JJ-A5

Report Number.....:	ZKT-220822L5921E
Date of Test.....	August 15, 2022 to August 16, 2022
Date of issue.....:	August 29, 2022
Total number of pages.....	28
Test Result .....:	PASS
Testing Laboratory.....:	**Shenzhen ZKT Technology Co., Ltd.**
Address .....:	1/F, No. 101, Building B, No. 6, Tangwei Community Industrial Avenue, Fuhai Street, Bao'an District, Shenzhen, China
Applicant's name .....:	**Uni Interactive, LLC**
Address .....:	Office 302, 111 Zhenhua Rd., Huaqiang North, Futian Dist., Shenzhen, Guangdong, China
Manufacturer's name .....:	**Uni Interactive, LLC**
Address .....:	Office 302, 111 Zhenhua Rd., Huaqiang North, Futian Dist., Shenzhen, Guangdong, China
Test specification:	
Standard.....:	FCC CFR Title 47 Part 15 Subpart C Section 15.249 ANSI C63.10:2013
Test procedure.....:	/
Non-standard test method .....:	N/A
Test Report Form No.....:	TRF-EL-111_V0
Test Report Form(s) Originator.....:	ZKT Testing
Master TRF .....:	Dated: 2020-01-06

This device described above has been tested by ZKT, and the test results show that the equipment under test (EUT) is in compliance with the FCC requirements. And it is applicable only to the tested sample identified in the report.
This report shall not be reproduced except in full, without the written approval of ZKT, this document may be altered or revised by ZKT, personal only, and shall be noted in the revision of the document.

Product name.....:	**Papercraft Drift Racer**
Trademark .....:	Uni Interactive
Model/Type reference.....:	A5
Ratings.....:	DC 3V by 2*AA

Testing procedure and testing location:

Testing Laboratory.....:	**Shenzhen ZKT Technology Co., Ltd.**
Address.....:	1/F, No. 101, Building B, No. 6, Tangwei Community Industrial Avenue, Fuhai Street, Bao'an District, Shenzhen, China
Tested by (name + signature).....:	Jim Liu Jim Liu
Reviewer (name + signature).....:	Tom Zou Tom Zou
Approved (name + signature).....:	Lake Xie Lake Xie

Shenzhen ZKT Technology Co., Ltd. Approved

Table of Contents **Page**

1.VERSION **4**

2. SUMMARY OF TEST RESULTS **5**

2.1 TEST FACILITY **6**

2.2 MEASUREMENT UNCERTAINTY **6**

3. GENERAL INFORMATION **7**

3.1 GENERAL DESCRIPTION OF EUT **7**

3.2 DESCRIPTION OF TEST MODES **9**

3.3 BLOCK DIGRAM SHOWING THE CONFIGURATION OF SYSTEM TESTED **9**

3.4 DESCRIPTION OF SUPPORT UNITS(CONDUCTED MODE) **9**

3.5 EQUIPMENTS LIST FOR ALL TEST ITEMS **10**

4. EMC EMISSION TEST **12**

4.1 CONDUCTED EMISSION MEASUREMENT **12**

4.1.1 POWER LINE CONDUCTED EMISSION LIMITS **12**

4.1.2 TEST PROCEDURE **12**

4.1.3 DEVIATION FROM TEST STANDARD **12**

4.1.4 TEST SETUP **13**

4.1.5 EUT OPERATING CONDITIONS **13**

4.2 RADIATED EMISSION MEASUREMENT **14**

4.2.1 RADIATED EMISSION LIMITS **14**

4.2.2 TEST PROCEDURE **15**

4.2.3 DEVIATION FROM TEST STANDARD **15**

4.2.4 TEST SETUP **16**

4.2.5 EUT OPERATING CONDITIONS **17**

5. RADIATED BAND EMISSION MEASUREMENT **22**

5.1 TEST REQUIREMENT: **22**

5.2 TEST PROCEDURE **22**

5.3 DEVIATION FROM TEST STANDARD **22**

5.4 TEST SETUP **23**

5.5 EUT OPERATING CONDITIONS **23**

5.6 TEST RESULT **24**

6. BANDWIDTH TEST **25**

7. ANTENNA REQUIREMENT **27**

8. TEST SETUP PHOTO **28**

9. EUT CONSTRUCTIONAL DETAILS **28**

1.VERSION

Report No.	Version	Description	Approved
ZKT-220822L5921E	Rev.01	Initial issue of report	August 29, 2022

2. SUMMARY OF TEST RESULTS

Test procedures according to the technical standards:

FCC Part15 (15.249) , Subpart C			
Standard Section	Test Item	Judgment	Remark
FCC part 15.203	Antenna requirement	PASS	
FCC part 15.207	AC Power Line Conducted Emission	N/A	
FCC part 15.249(d)	Band Edge	PASS	
FCC part 15.205/15.209/ 15.249	Spurious Emission	PASS	
FCC part 15.215(c)	20 dB Bandwidth	PASS	

NOTE:

(1)“N/A” denotes test is not applicable in this Test Report

2.1 TEST FACILITY

Shenzhen ZKT Technology Co., Ltd.
Add. : 1/F, No. 101, Building B, No. 6, Tangwei Community Industrial Avenue, Fuhai Street, Bao'an District, Shenzhen, China

FCC Test Firm Registration Number: 692225
Designation Number: CN1299
IC Registered No.: 27033

2.2 MEASUREMENT UNCERTAINTY

The reported uncertainty of measurement y ± U，where expended uncertainty U is based on a standard uncertainty multiplied by a coverage factor of k=2，providing a level of confidence of approximately 95 %。

No.	Item	Uncertainty
1	3m camber Radiated spurious emission(9KHz-30MHz)	U=4.5dB
2	3m camber Radiated spurious emission(30MHz-1GHz)	U=4.8dB
3	3m chamber Radiated spurious emission(1GHz-6GHz)	U=4.9dB
4	3m chamber Radiated spurious emission(6GHz-40GHz)	U=5.0dB
5	Conducted disturbance	U=3.2dB
6	RF Band Edge	U=1.68dB
7	RF power conducted	U=1.86dB
8	RF conducted Spurious Emission	U=2.2dB
9	RF Occupied Bandwidth	U=1.8dB
10	RF Power Spectral Density	U=1.75dB
11	humidity uncertainty	U=5.3%
12	Temperature uncertainty	U=0.59℃

3. GENERAL INFORMATION

3.1 GENERAL DESCRIPTION OF EUT

Product Name:	Papercraft Drift Racer
Model No.:	A5
Model Different.:	N/A
Serial No.:	ZKT-220822L5921E
Hardware Version:	V1.0
Software Version:	V1.0
Sample(s) Status:	Engineer sample
Operation Frequency:	2405MHz~2475MHz
Channel Numbers:	71
Channel Separation:	1MHz
Modulation Type:	GFSK
Antenna Type:	Integral Antenna
Antenna gain:	0dBi
Power supply:	DC 3V by 2*AA
SWITCHING POWER ADAPTER:	N/A

Operation Frequency each of channel

Channel	Frequency	Channel	Frequency	Channel	Frequency	Channel	Frequency
1	2405 MHz	19	2423 MHz	37	2441 MHz	55	2459 MHz
2	2406 MHz	20	2424 MHz	38	2442 MHz	56	2460 MHz
3	2407 MHz	21	2425 MHz	39	2443 MHz	57	2461 MHz
4	2408 MHz	22	2426 MHz	40	2444 MHz	58	2462 MHz
5	2409 MHz	23	2427 MHz	41	2445 MHz	59	2463 MHz
6	2410 MHz	24	2428 MHz	42	2446 MHz	60	2464 MHz
7	2411 MHz	25	2429 MHz	43	2447 MHz	61	2465 MHz
8	2412 MHz	26	2430 MHz	44	2448 MHz	62	2466 MHz
9	2413 MHz	27	2431 MHz	45	2449 MHz	63	2467 MHz
10	2414 MHz	28	2432 MHz	46	2450 MHz	64	2468 MHz
11	2415 MHz	29	2433 MHz	47	2451 MHz	65	2469 MHz
12	2416 MHz	30	2434 MHz	48	2452 MHz	66	2470 MHz
13	2417 MHz	31	2435 MHz	49	2453 MHz	67	2471 MHz
14	2418 MHz	32	2436 MHz	50	2454 MHz	68	2472 MHz
15	2419 MHz	33	2437 MHz	51	2455 MHz	69	2473 MHz
16	2420 MHz	34	2438 MHz	52	2456 MHz	70	2474 MHz

17	2421 MHz	35	2439 MHz	53	2457 MHz	71	2475 MHz
18	2422 MHz	36	2440 MHz	54	2458 MHz		

Note:
In section 15.31(m), regards to the operating frequency range over 10 MHz, the Lowest frequency, the middle frequency, and the highest frequency of channel were selected to perform the test, and the selected channel see below:

Channel	Frequency
The lowest channel	2405MHz
The middle channel	2440MHz
The Highest channel	2475MHz

3.2 DESCRIPTION OF TEST MODES

Transmitting mode	Keep the EUT in continuously transmitting mode
--	--
Remark: During the test, the test voltage was tuned from 85% to 115% of the nominal rated supply voltage, and found that the worst case was under the nominal rated supply condition. So the report just shows that condition's data.	

3.3 BLOCK DIGRAM SHOWING THE CONFIGURATION OF SYSTEM TESTED

Conducted Emission

DC Line — EUT

Radiated Emission

EUT

3.4 DESCRIPTION OF SUPPORT UNITS(CONDUCTED MODE)

The EUT has been tested as an independent unit together with other necessary accessories or support units. The following support units or accessories were used to form a representative test configuration during the tests.

Item	Equipment	Mfr/Brand	Model/Type No.	Series No.	Note

Item	Shielded Type	Ferrite Core	Length	Note

Note:

(1) The support equipment was authorized by Declaration of Confirmation.
(2) For detachable type I/O cable should be specified the length in cm in 『Length』 column.

3.5 EQUIPMENTS LIST FOR ALL TEST ITEMS

Radiation Test equipment

Item	Equipment	Manufacturer	Type No.	Serial No.	Last calibration	Calibrated until
1	Spectrum Analyzer (9kHz-26.5GHz)	KEYSIGHT	9020A	MY45109572	Sep. 22, 2021	Sep. 21, 2022
2	Spectrum Analyzer (1GHz-40GHz)	Agilent	E4446A	100363	Sep. 22, 2021	Sep. 21, 2022
3	Test Receiver (9kHz-7GHz)	R&S	ESCI7	101169	Sep. 22, 2021	Sep. 21, 2022
4	Bilog Antenna (30MHz-1400MHz)	Schwarzbeck	VULB9168	00877	Sep. 22, 2021	Sep. 21, 2022
5	Horn Antenna (1GHz-18GHz)	SCHWARZBEC K	BBHA9120D	1541	Sep. 22, 2021	Sep. 21, 2022
6	Horn Antenna (18GHz-40GHz)	A.H. System	SAS-574	588	Sep. 22, 2021	Sep. 21, 2022
7	Amplifier (30-1000MHz)	EM Electronics	EM330 Amplifier	N/A	Sep. 22, 2021	Sep. 21, 2022
8	Amplifier (1GHz-40GHz)	全聚达	DLE-161	097	Sep. 22, 2021	Sep. 21, 2022
9	Loop Antenna (9KHz-30MHz)	SCHWARZBEC K	FMZB1519B	014	Sep. 22, 2021	Sep. 21, 2022
10	RF cables1 (9kHz-30MHz)	N/A	9kHz-30MHz	N/A	Sep. 22, 2021	Sep. 21, 2022
11	RF cables2 (30MHz-1GHz)	N/A	30MHz-1GHz	N/A	Sep. 22, 2021	Sep. 21, 2022
12	RF cables3 (1GHz-40GHz)	N/A	1GHz-40GHz	N/A	Sep. 22, 2021	Sep. 21, 2022
13	CMW500 Test	R&S	CMW500	106504	Sep. 22, 2021	Sep. 21, 2022
14	ESG Signal Generator	Agilent	E4421B	GB40051203	Sep. 22, 2021	Sep. 21, 2022
15	Signal Generator	Agilent	N5182A	MY47420215	Sep. 22, 2021	Sep. 21, 2022
16	D.C. Power Supply	LongWei	TPR-6405D	\	\	\
17	MWRF Power Meter Test system	MW	MW100-RPCB	\	Sep. 22, 2021	Sep. 21, 2022
17	EMC Software	Frad	EZ-EMC	Ver.EMC-CON 3A1.1	\	\
18	RF Software	MW	MTS8310	V2.0.0.0	\	\
19	Turntable	MF	MF-7802BS	\	\	\
20	Antenna tower	MF	MF-7802BS	\	\	\

Conduction Test equipment

Item	Kind of Equipment	Manufacturer	Type No.	Serial No.	Last calibration	Calibrated until
1	LISN	R&S	ENV216	N/A	Sep. 22, 2021	Sep. 21, 2022
2	LISN	CYBERTEK	EM5040A	N/A	Sep. 22, 2021	Sep. 21, 2022
3	Test Cable	N/A	C01	N/A	Sep. 22, 2021	Sep. 21, 2022
4	Test Cable	N/A	C02	N/A	Sep. 22, 2021	Sep. 21, 2022
5	EMI Test Receiver	R&S	ESCI3	101421	Sep. 22, 2021	Sep. 21, 2022
6	Triple-Loop Antenna	LAPLACE	RF300	9194	Sep. 22, 2021	Sep. 21, 2022
7	Absorbing Clamp	DZ	ZN23201	N/A	Sep. 22, 2021	Sep. 21, 2022
8	EMC Software	Frad	EZ-EMC	Ver.EMC-CON 3A1.1	\	\

4. EMC EMISSION TEST

4.1 CONDUCTED EMISSION MEASUREMENT

Test Requirement:	FCC Part15 C Section 15.207
Test Method:	ANSI C63.10:2013
Test Frequency Range:	150KHz to 30MHz
Receiver setup:	RBW=9KHz, VBW=30KHz, Sweep time=auto

4.1.1 POWER LINE CONDUCTED EMISSION Limits

FREQUENCY (MHz)	Limit (dBuV)		Standard
	Quas-peak	Average	
0.15 -0.5	66 - 56 *	56 - 46 *	FCC
0.50 -5.0	56.00	46.00	FCC
5.0 -30.0	60.00	50.00	FCC

Note:

(1) *Decreases with the logarithm of the frequency.

4.1.2 TEST PROCEDURE

a. The EUT was placed 0.8 meters from the horizontal ground plane with EUT being connected to the power mains through a line impedance stabilization network (LISN). All other support equipments powered from additional LISN(s). The LISN provide 50 Ohm/ 50uH of coupling impedance for the measuring instrument.
b. Interconnecting cables that hang closer than 40 cm to the ground plane shall be folded back and forth in the center forming a bundle 30 to 40 cm long.
c. I/O cables that are not connected to a peripheral shall be bundled in the center. The end of the cable may be terminated, if required, using the correct terminating impedance. The overall length shall not exceed 1 m.
d. LISN at least 80 cm from nearest part of EUT chassis.
e. For the actual test configuration, please refer to the related Item –EUT Test Photos.

4.1.3 DEVIATION FROM TEST STANDARD

No deviation

4.1.4 TEST SETUP

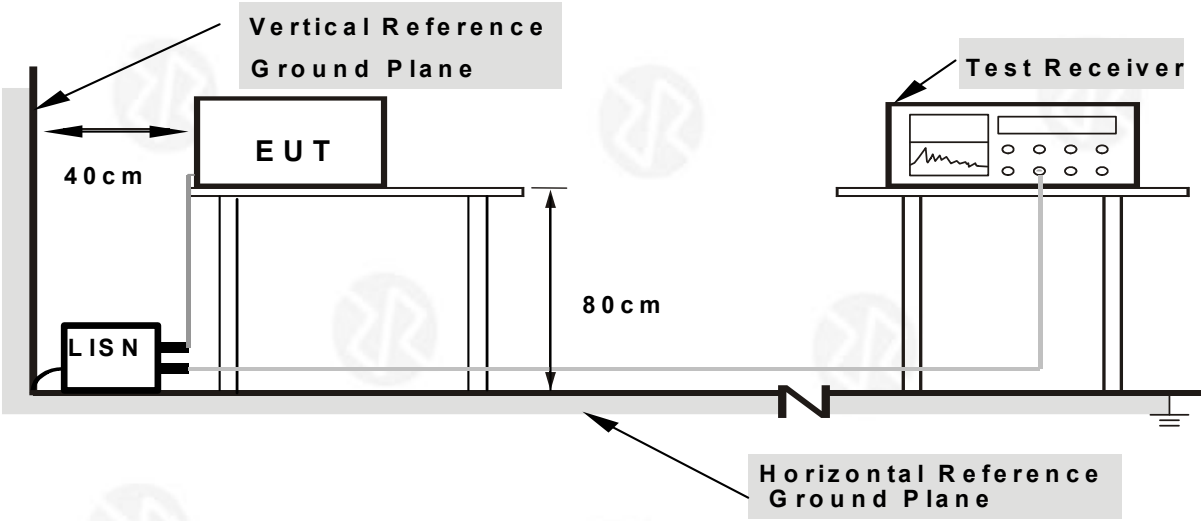

Note: 1.Support units were connected to second LISN.
2.Both of LISNs (AMN) are 80 cm from EUT and at least 80 from other units and other metal planes

4.1.5 EUT OPERATING CONDITIONS

The EUT was configured for testing in a typical fashion (as a customer would normally use it). The EUT has been programmed to Charging during test. This operating condition was tested and used to collect the included data.

We pretest AC 120V and AC 230V, the worst voltage was AC 120V and the data recording in the report.

4.1.6 Test Result

Because the product uses dry battery power, so not applicable.

4.2 RADIATED EMISSION MEASUREMENT

Test Requirement:	FCC Part15 C Section 15.209 and 15.249
Test Method:	ANSI C63.10:2013
Test Frequency Range:	9kHz to 25GHz
Test site:	Measurement Distance: 3m
Receiver setup:	

Frequency	Detector	RBW	VBW	Value
9KHz-150KHz	Quasi-peak	200Hz	600Hz	Quasi-peak
150KHz-30MHz	Quasi-peak	9KHz	30KHz	Quasi-peak
30MHz-1GHz	Quasi-peak	120KHz	300KHz	Quasi-peak
Above 1GHz	Peak	1MHz	3MHz	Peak
	Peak	1MHz	10Hz	Average

4.2.1 RADIATED EMISSION LIMITS

Frequencies (MHz)	Field Strength (micorvolts/meter)	Measurement Distance (meters)
0.009~0.490	2400/F(KHz)	300
0.490~1.705	24000/F(KHz)	30
1.705~30.0	30	30
30~88	100	3
88~216	150	3
216~960	200	3
Above 960	500	3

FCC Part 15.249 (a)

Fundamental frequency	Field strength of fundamental (millivolts/meter)	Field strength of harmonics (microvolts/meter)
902-928 MHz	50	500
2400-2483.5 MHz	50	500
5725-5875 MHz	50	500
24.0-24.25 GHz	250	2500

LIMITS OF RADIATED EMISSION MEASUREMENT

FREQUENCY (MHz)	Limit (dBuV/m) (at 3M)	
	PEAK	AVERAGE
Above 1000	74	54

Notes:

(1) The limit for radiated test was performed according to FCC PART 15C.

(2) The tighter limit applies at the band edges.

(3) Emission level (dBuV/m)=20log Emission level (uV/m).

4.2.2 TEST PROCEDURE

a. The measuring distance of at 3 m shall be used for measurements at frequency up to 25GHz. For frequencies above 1GHz, any suitable measuring distance may be used.
b. The EUT was placed on the top of a rotating table 0.8 meters above the ground at a 3 meter semi-chamber test. The table was rotated 360 degrees to determine the position of the highest radiation.
c. The height of the equipment or of the substitution antenna shall be 0.8m; above 1GHz, the height was 1.5m, the height of the test antenna shall vary between 1 m to 4 m. Both horizontal and vertical polarizations of the antenna are set to make the measurement.
d. The initial step in collecting conducted emission data is a spectrum analyzer peak detector mode pre-scanning the measurement frequency range. Significant peaks are then marked and then Quasi Peak detector mode re-measured.
e. If the Peak Mode measured value compliance with and lower than Quasi Peak Mode Limit, the EUT shall be deemed to meet QP Limits and then no additional QP Mode measurement performed.
f. For the actual test configuration, please refer to the related Item –EUT Test Photos.
g. For the radiated emission test above 1GHz:
Place the measurement antenna away from each area of the EUT determined to be a source of emissions at the specified measurement distance, while keeping the measurement antenna aimed at the source of emissions at each frequency of significant emissions, with polarization oriented for maximum response.
The measurement antenna may have to be higher or lower than the EUT, depending on the radiation pattern of the emission and staying aimed at the emission source for receiving the maximum signal. The final measurement antenna elevation shall be that which maximizes the emissions. The measurement antenna elevation for maximum emissions shall be restricted to a range of heights of from 1 m to 4 m above the ground or reference ground plane.
Note:
Both horizontal and vertical antenna polarities were tested
and performed pretest to three orthogonal axis. The worst case emissions were reported

4.2.3 DEVIATION FROM TEST STANDARD

No deviation

4.2.4 TEST SETUP

（A）Radiated Emission Test-Up Frequency Below 30MHz

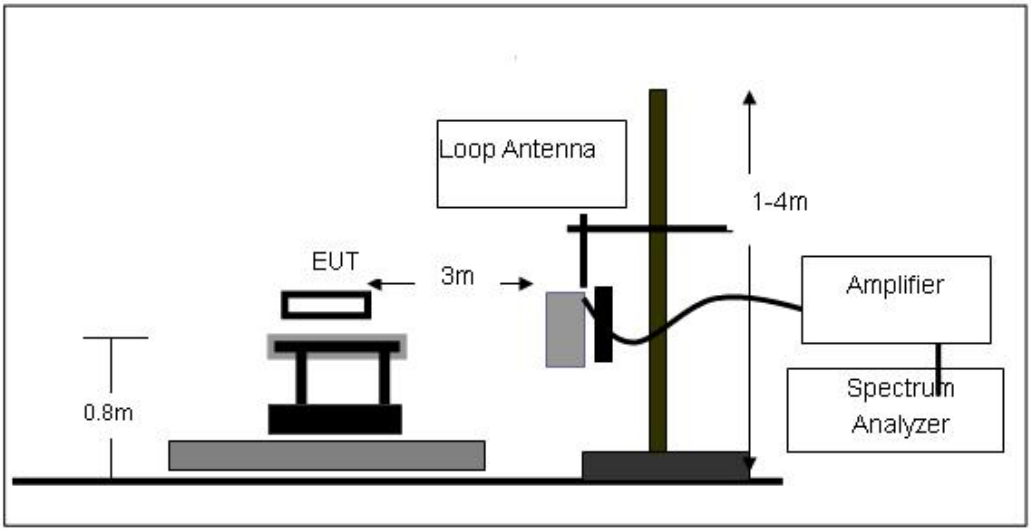

（B）Radiated Emission Test-Up Frequency 30MHz~1GHz

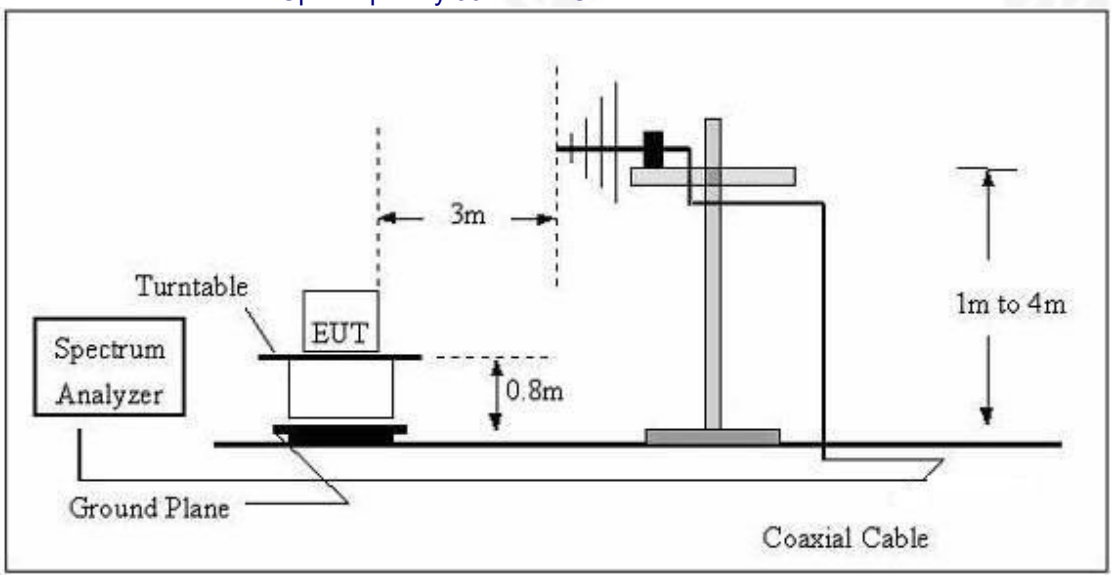

（C）Radiated Emission Test-Up Frequency Above 1GHz

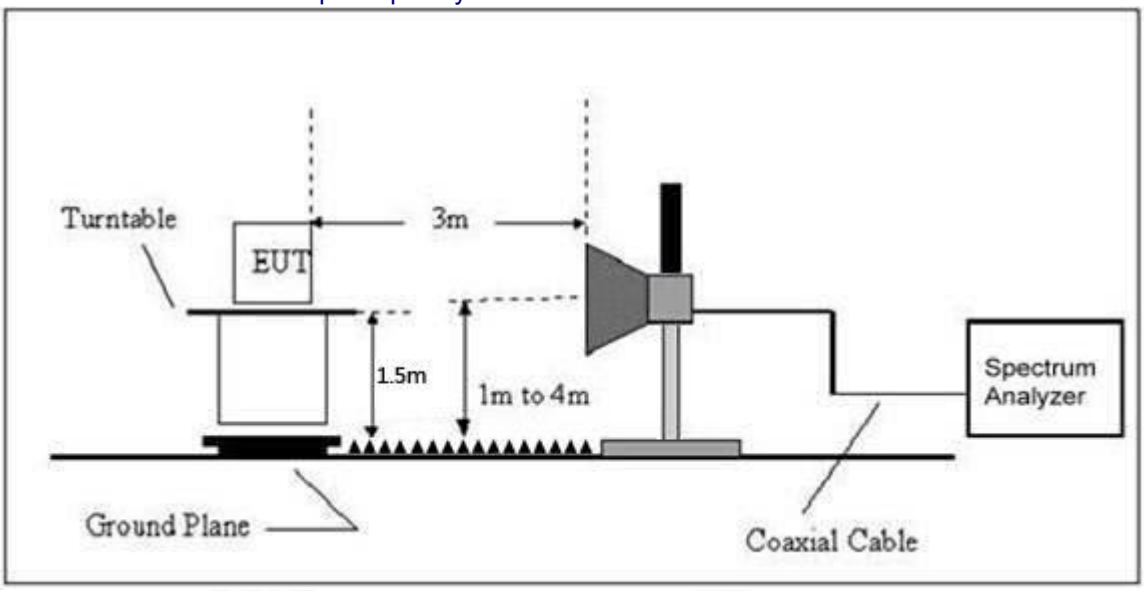

4.2.5 EUT OPERATING CONDITIONS

The EUT tested system was configured as the statements of 2.4 Unless otherwise a special operating condition is specified in the follows during the testing.

4.2.6 TEST RESULTS (Between 9KHz – 30 MHz)

The emission from 9 kHz to 30MHz was pre-tested and found the result was 20dB lower than the limit, and according to 15.31(o) & RSS-Gen 6.13, the test result no need to reported.

Between 30MHz – 1GHz

Temperature:	26℃	Relative Humidity:	54%
Pressure:	101 kPa	Polarization:	Horizontal
Test Voltage:	DC 3.0V		

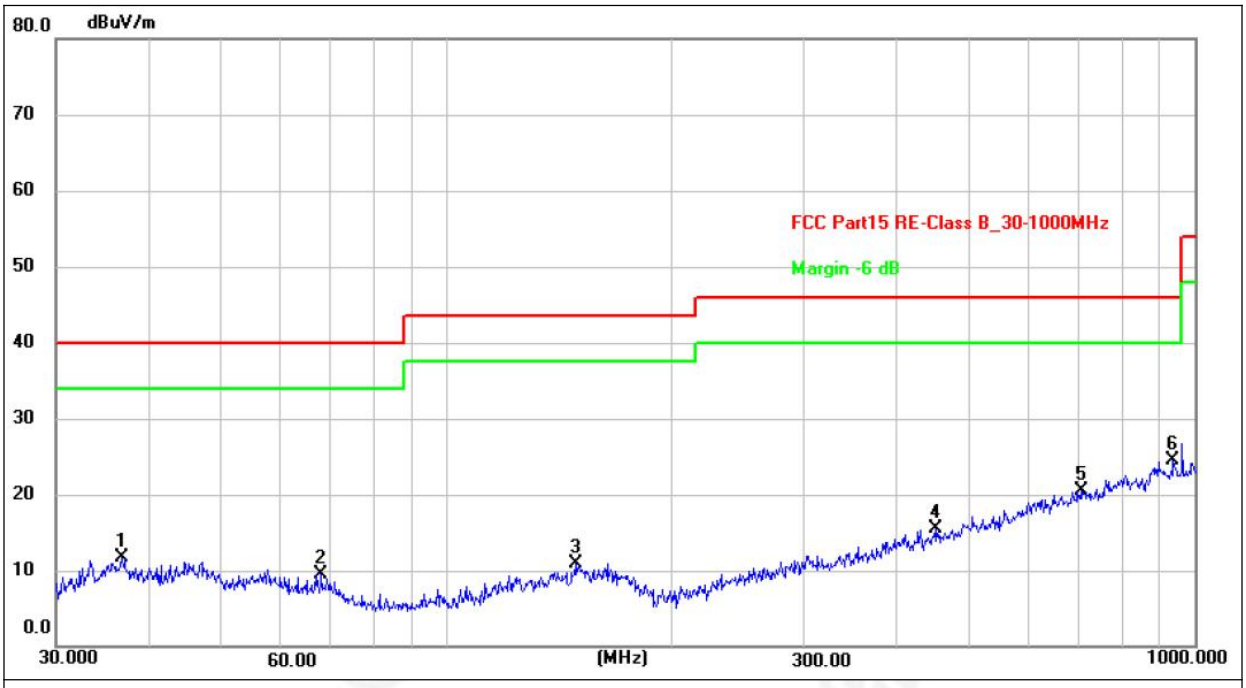

No.	Frequency (MHz)	Reading (dBuV)	Factor (dB/m)	Level (dBuV/m)	Limit (dBuV/m)	Margin (dB)	Detector	Height (cm)	Azimuth (deg.)	P/F	Remark
1	36.7662	26.36	-14.75	11.61	40.00	-28.39	peak	100	194	P	
2	67.9128	26.36	-16.84	9.52	40.00	-30.48	peak	100	178	P	
3	148.4410	25.84	-15.01	10.83	43.50	-32.67	peak	100	164	P	
4	451.1350	26.63	-11.03	15.60	46.00	-30.40	peak	100	238	P	
5	704.2260	25.96	-5.48	20.48	46.00	-25.52	peak	100	196	P	
6 *	935.5463	26.95	-2.54	24.41	46.00	-21.59	peak	100	164	P	

Temperature:	26℃	Relative Humidity:	54%
Pressure:	101kPa	Polarization:	Vertical
Test Voltage:	DC 3.0V		

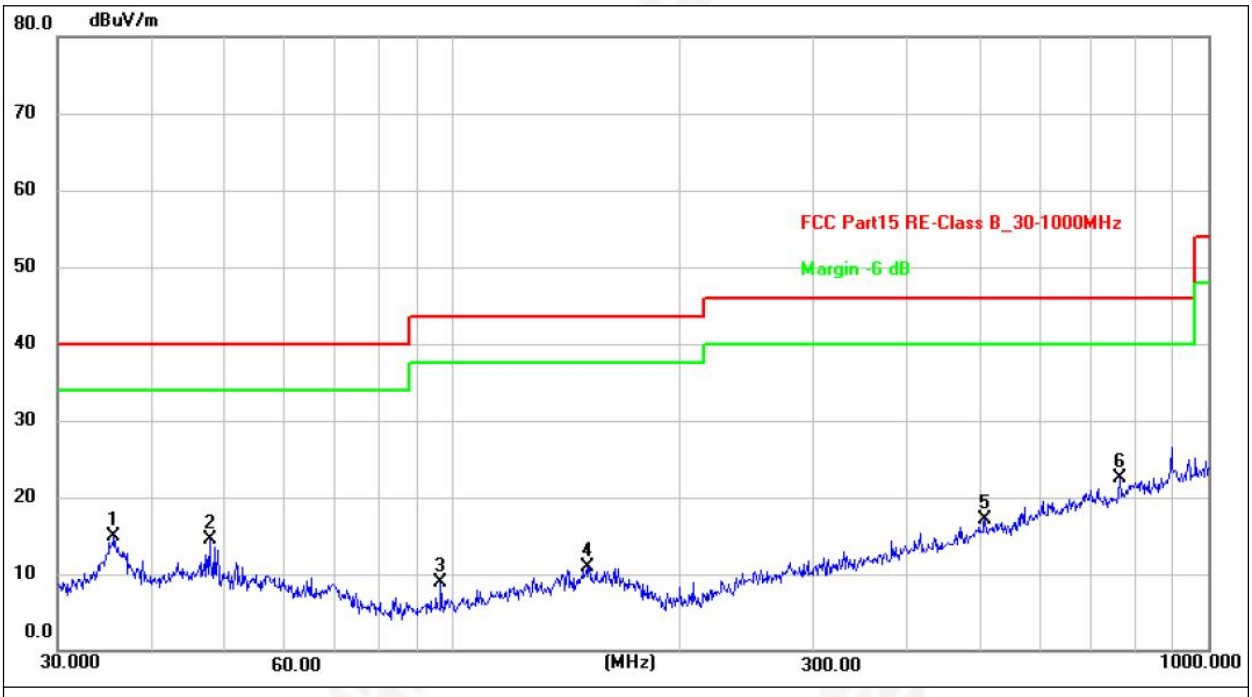

No.	Frequency (MHz)	Reading (dBuV)	Factor (dB/m)	Level (dBuV/m)	Limit (dBuV/m)	Margin (dB)	Detector	Height (cm)	Azimuth (deg.)	P/F	Remark
1	35.6240	29.76	-14.93	14.83	40.00	-25.17	peak	100	154	P	
2	47.6586	29.62	-15.17	14.45	40.00	-25.55	peak	100	195	P	
3	96.4360	28.06	-19.07	8.99	43.50	-34.51	peak	100	146	P	
4	150.5377	25.77	-14.92	10.85	43.50	-32.65	peak	100	120	P	
5	506.4790	26.60	-9.57	17.03	46.00	-28.97	peak	100	9	P	
6 *	763.3757	27.40	-4.88	22.52	46.00	-23.48	peak	100	266	P	

Remarks:
1.Final Level =Receiver Read level + Antenna Factor + Cable Loss – Preamplifier Factor
2.The emission levels of other frequencies are very lower than the limit and not show in test report.
3.The test data shows only the worst case GFSK mode

1GHz~25GHz

Polar (H/V)	Frequency (MHz)	Meter Reading (dBuV)	Pre-amplifier (dB)	Cable Loss (dB)	Antenna Factor (dB)	Emission Level (dBuV/m)	Limits (dBuV/m)	Margin (dB)	Detector Type
Low Channel:2405MHz									
V	2405.00	86.22	30.22	4.85	23.98	85.83	114.00	-28.17	Pk
V	2405.00	84.78	30.22	4.85	23.98	82.39	94.00	-11.61	AV
V	4810.00	57.33	30.55	5.77	24.66	56.21	74.00	-17.79	Pk
V	4810.00	45.98	30.55	5.77	24.66	46.60	54.00	-7.40	AV
V	7215.00	55.36	30.33	6.32	24.55	54.73	74.00	-19.27	Pk
V	7215.00	45.72	30.33	6.32	24.55	45.86	54.00	-8.14	AV
H	2405.00	96.36	30.22	4.85	23.98	91.88	114.00	-22.12	Pk
H	2405.00	89.67	30.22	4.85	23.98	88.27	94.00	-5.73	AV
H	4810.00	58.23	30.55	5.77	24.66	58.11	74.00	-15.89	Pk
H	4810.00	47.31	30.55	5.77	24.66	47.80	54.00	-6.20	AV
H	7215.00	56.68	30.33	6.32	24.55	57.22	74.00	-16.78	Pk
H	7215.00	44.98	30.33	6.32	24.55	46.46	54.00	-7.54	AV

Polar (H/V)	Frequency (MHz)	Meter Reading (dBuV)	Pre-amplifier (dB)	Cable Loss (dB)	Antenna Factor (dB)	Emission Level (dBuV/m)	Limits (dBuV/m)	Margin (dB)	Detector Type
Middle Channel:2440MHz									
V	2440.00	87.55	30.22	4.85	23.98	86.16	114.00	-27.84	Pk
V	2440.00	84.95	30.22	4.85	23.98	82.54	94.00	-11.46	AV
V	4880.00	55.87	30.55	5.77	24.66	55.61	74.00	-18.39	Pk
V	4880.00	46.32	30.55	5.77	24.66	46.09	54.00	-7.91	AV
V	7320.00	54.68	30.33	6.32	24.55	54.84	74.00	-19.16	Pk
V	7320.00	45.36	30.33	6.32	24.55	46.17	54.00	-7.83	AV
H	2440.00	92.58	30.22	4.85	23.98	91.46	114.00	-22.54	Pk
H	2440.00	89.23	30.22	4.85	23.98	87.73	94.00	-6.27	AV
H	4880.00	56.86	30.55	5.77	24.66	56.63	74.00	-17.37	Pk
H	4880.00	47.32	30.55	5.77	24.66	47.21	54.00	-6.79	AV
H	7320.00	54.32	30.33	6.32	24.55	55.83	74.00	-18.17	Pk
H	7320.00	45.02	30.33	6.32	24.55	45.43	54.00	-8.57	AV

Polar (H/V)	Frequency (MHz)	Meter Reading (dBuV)	Pre-amplifier (dB)	Cable Loss (dB)	Antenna Factor (dB)	Emission Level (dBuV/m)	Limits (dBuV/m)	Margin (dB)	Detector Type
High Channel:2475MHz									
V	2475.00	87.99	30.22	4.85	23.98	86.78	114.00	-27.22	Pk
V	2475.00	85.21	30.22	4.85	23.98	82.86	94.00	-11.14	AV
V	4950.00	54.95	30.55	5.77	24.66	55.58	74.00	-18.42	Pk
V	4950.00	45.69	30.55	5.77	24.66	46.35	54.00	-7.65	AV
V	7425.00	54.12	30.33	6.32	24.55	55.66	74.00	-18.34	Pk
V	7425.00	46.31	30.33	6.32	24.55	47.25	54.00	-6.75	AV
H	2475.00	92.79	30.22	4.85	23.98	91.40	114.00	-22.60	Pk
H	2475.00	87.99	30.22	4.85	23.98	86.88	94.00	-7.12	AV
H	4950.00	56.65	30.55	5.77	24.66	56.53	74.00	-17.47	Pk
H	4950.00	45.89	30.55	5.77	24.66	46.64	54.00	-7.36	AV
H	7425.00	54.23	30.33	6.32	24.55	55.77	74.00	-18.23	Pk
H	7425.00	44.67	30.33	6.32	24.55	45.98	54.00	-8.02	AV

Remark:
1. Emission Level = Meter Reading + Antenna Factor + Cable Loss – Pre-amplifier,
   Margin= Emission Level - Limit
2. If peak below the average limit, the average emission was no test.
3. The amplitude of spurious emissions which are attenuated by more than 20dB below the permissible value has no need to be reported.

5. RADIATED BAND EMISSION MEASUREMENT

5.1 TEST REQUIREMENT:

Test Requirement:	FCC Part15 C Section 15.209, 15.205 and 15.249
Test Method:	ANSI C63.10: 2013
Test Frequency Range:	All of the restrict bands were tested, only the worst band's (2310MHz to 2500MHz) data was showed.
Test site:	Measurement Distance: 3m
Receiver setup:	

Frequency	Detector	RBW	VBW	Value
Above 1GHz	Peak	1MHz	3MHz	Peak
	Average	1MHz	3MHz	Average

LIMITS OF RADIATED EMISSION MEASUREMENT (Above 1000MHz)

FREQUENCY (MHz)	Limit (dBuV/m) (at 3M)	
	PEAK	AVERAGE
Above 1000	74	54

Notes:

(1) The limit for radiated test was performed according to FCC PART 15C.

(2) The tighter limit applies at the band edges.

(3) Emission level (dBuV/m)=20log Emission level (uV/m).

5.2 TEST PROCEDURE

Above 1GHz test procedure as below:

a. 1. The EUT was placed on the top of a rotating table 1.5 meters above the ground at a 3 meter camber. The table was rotated 360 degrees to determine the position of the highest radiation.

b. The EUT was set 3 meters away from the interference-receiving antenna, which was mounted on the top of a variable-height antenna tower.

c. The antenna height is varied from one meter to four meters above the ground to determine the maximum value of the field strength. Both horizontal and vertical polarizations of the antenna are set to make the measurement.

d. For each suspected emission, the EUT was arranged to its worst case and then the antenna was tuned to heights from 1 meter to 4 meters and the rota table was turned from 0 degrees to 360 degrees to find the maximum reading.

e. The test-receiver system was set to Peak Detect Function and Specified Bandwidth with Maximum Hold Mode.

f. If the emission level of the EUT in peak mode was 10dB lower than the limit specified, then testing could be stopped and the peak values of the EUT would be reported. Otherwise the emissions that did not have 10dB margin would be re-tested one by one using peak, quasi-peak or average method as specified and then reported in a data sheet.

g. Test the EUT in the lowest channel,the Highest channel

Note:

Both horizontal and vertical antenna polarities were tested
and performed pretest to three orthogonal axis. The worst case emissions were reported

5.3 DEVIATION FROM TEST STANDARD

No deviation

5.4 TEST SETUP

Radiated Emission Test-Up Frequency Above 1GHz

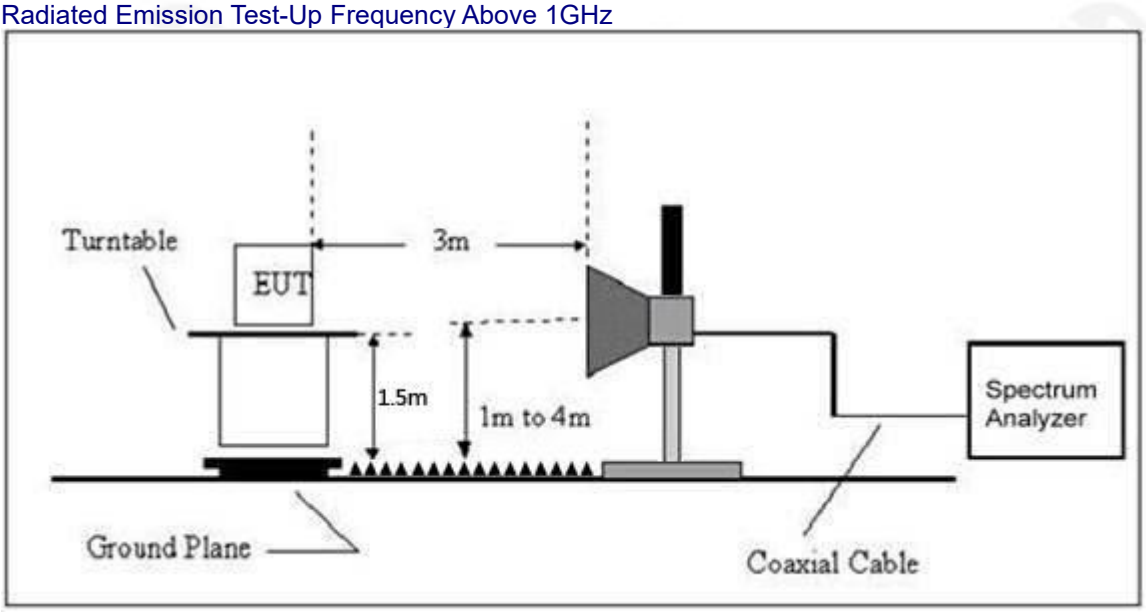

5.5 EUT OPERATING CONDITIONS

The EUT tested system was configured as the statements of 2.3 Unless otherwise a special operating condition is specified in the follows during the testing.

5.6 TEST RESULT

	Polar (H/V)	Frequency (MHz)	Meter Reading (dBuV)	Pre-amplifier (dB)	Cable Loss (dB)	Antenna Factor (dB/m)	Emission level (dBuV/m)	Limit (dBuV/m)	Detector Type	Result
GFSK	Low Channel: 2405MHz									
	H	2390.00	53.42	30.22	4.85	23.98	52.03	74.00	PK	PASS
	H	2390.00	45.74	30.22	4.85	23.98	44.35	54.00	AV	PASS
	H	2400.00	54.62	30.22	4.85	23.98	53.23	74.00	PK	PASS
	H	2400.00	45.7	30.22	4.85	23.98	44.31	54.00	AV	PASS
	V	2390.00	54.17	30.22	4.85	23.98	52.78	74.00	PK	PASS
	V	2390.00	45.78	30.22	4.85	23.98	44.39	54.00	AV	PASS
	V	2400.00	54.42	30.22	4.85	23.98	53.03	74.00	PK	PASS
	V	2400.00	45.41	30.22	4.85	23.98	44.02	54.00	AV	PASS
	High Channel: 2475MHz									
	H	2483.50	55.03	30.22	4.85	23.98	53.64	74.00	PK	PASS
	H	2483.50	45.7	30.22	4.85	23.98	44.31	54.00	AV	PASS
	H	2500.00	54.25	30.22	4.85	23.98	52.86	74.00	PK	PASS
	H	2500.00	45.06	30.22	4.85	23.98	43.67	54.00	AV	PASS
	V	2483.50	52.73	30.22	4.85	23.98	51.34	74.00	PK	PASS
	V	2483.50	46.06	30.22	4.85	23.98	44.67	54.00	AV	PASS
	V	2500.00	55.08	30.22	4.85	23.98	53.69	74.00	PK	PASS
	V	2500.00	44.97	30.22	4.85	23.98	43.58	54.00	AV	PASS

Remark:
1. Emission Level = Meter Reading + Antenna Factor + Cable Loss – Pre-amplifier, Margin= Emission Level - Limit

6. BANDWIDTH TEST

1. Set RBW = 20 kHz.
2. Set the video bandwidth (VBW) ≥ 3 x RBW.
3. Detector = Peak.
4. Trace mode = max hold.
5. Sweep = auto couple.
6. Allow the trace to stabilize.
7. Measure the maximum width of the emission that is constrained by the frequencies associated with the two outermost amplitude points (upper and lower frequencies) that are attenuated by 20 dB relative to the maximum level measured in the fundamental emission.

TEST SETUP

Temperature :	26 ℃	Relative Humidity :	54%
Pressure :	101kPa		

Frequency (MHz)	20dB bandwidth (kHz)	99% bandwidth (kHz)	Result
2405	1187	1138.5	Pass
2440	1197	1176.7	Pass
2475	1199	1161.0	Pass

2405MHz

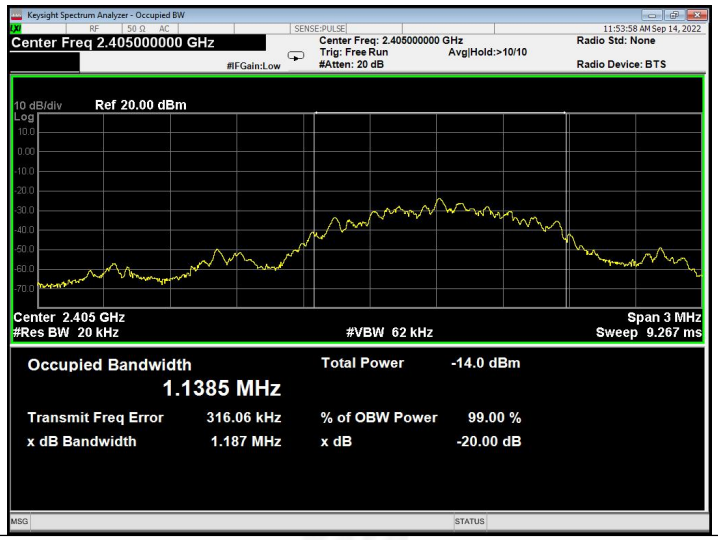

2440MHz

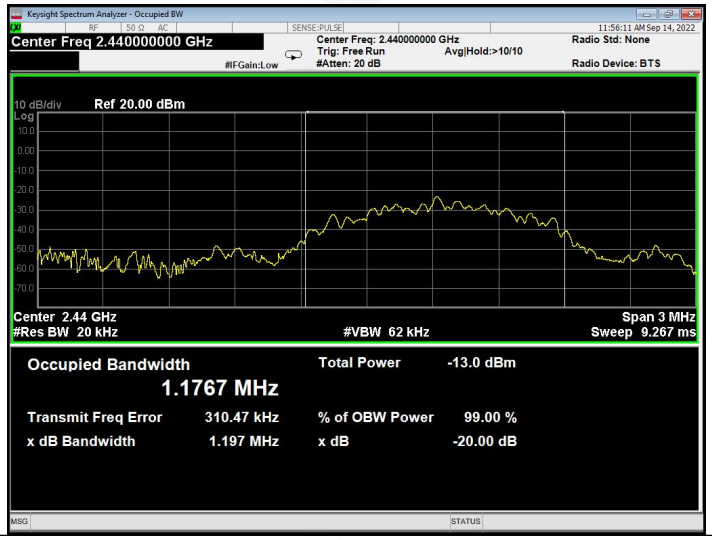

2475MHz

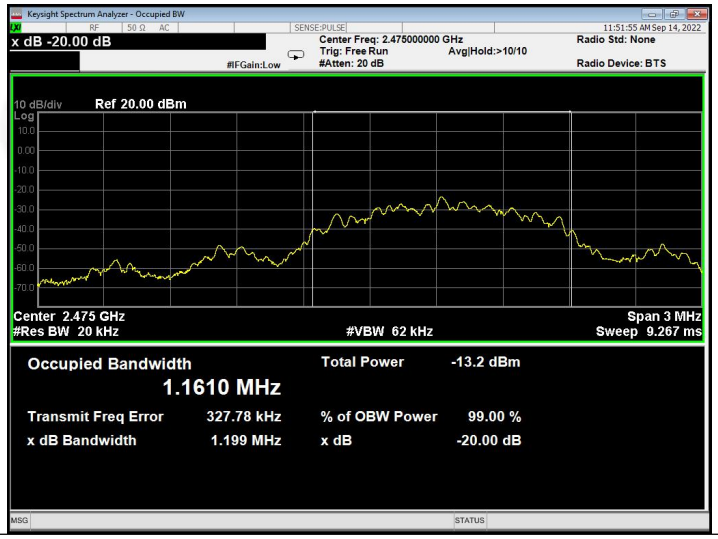

7. ANTENNA REQUIREMENT

Standard requirement:	FCC Part15.203
15.203 requirement: An intentional radiator shall be designed to ensure that no antenna other than that furnished by the responsible party shall be used with the device. The use of a permanently attached antenna or of an antenna that uses a unique coupling to the intentional radiator, the manufacturer may design the unit so that a broken antenna can be replaced by the user, but the use of a standard antenna jack or electrical connector is prohibited.	
EUT Antenna:	
The antenna is Integral ANT, the best case gain of the antennas is 0dBi, reference to the appendix II for details	

8. TEST SETUP PHOTO

Reference to the appendix I for details.

9. EUT CONSTRUCTIONAL DETAILS

Reference to the appendix II for details.

※※※※※ END OF REPORT ※※※※※