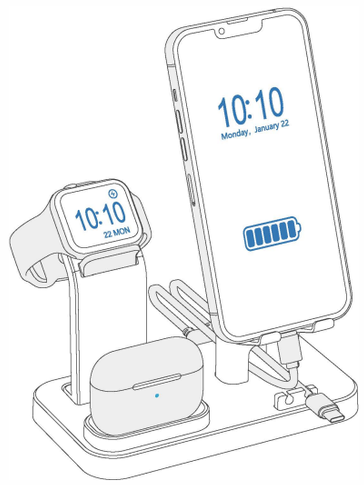

4-IN-1
Charging Station

Adapter: Input: AC 100-240V~50/60Hz 0.5A
Output: 5V4.0A
Station: Input: DC5V4.0A Adapter
Output: Phone: DC5V/3.0A(Max)
Watch: DC5V/0.5A(Max)
Earphone: DC5V/0.5A(Max)

PART LIST

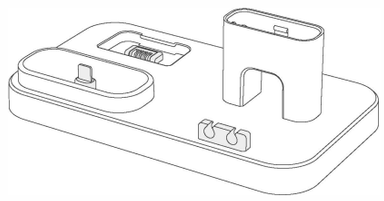

Base * 1

Watch Charger * 1

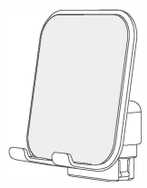

Phone Support * 1

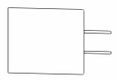

Wall Charger (Adapter) * 1

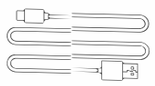

Cable * 1

2 in 1 Phone Cable * 1

INSTALLATION NOTES

1. Insert the watch charger into the base obliquely, then press it down.

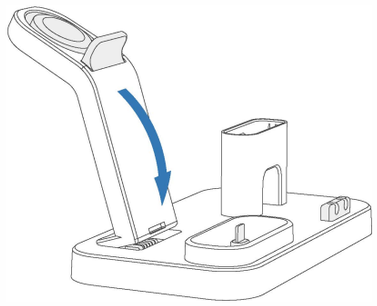

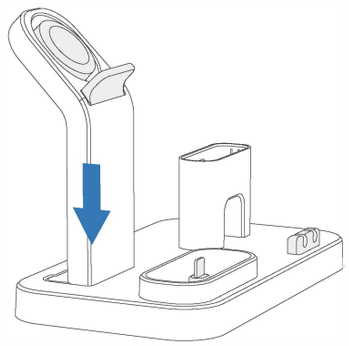

2. Insert the phone support into the base vertically.

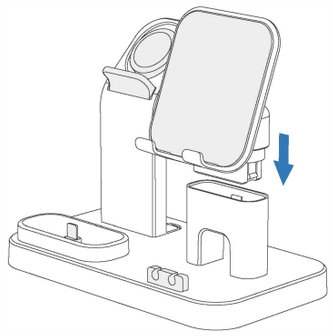

3. Adjust the phone support to the angle you want.

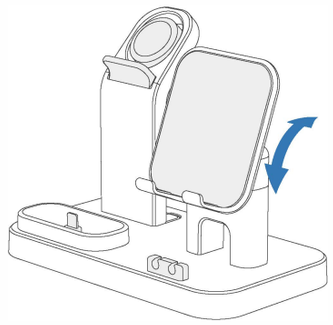

正面

4. Put your watch on the watch charger.

With forceful magnetic attraction, it can automatically adjust the height to fit watch in different sizes for getting faster charging.

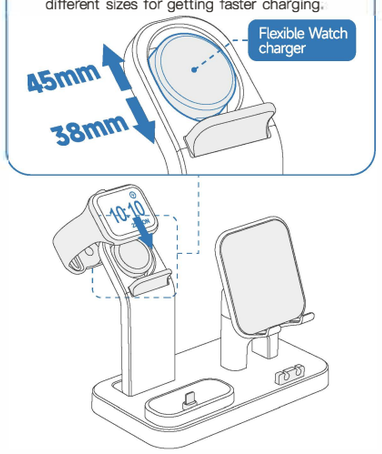

5. Put your AirPods on the AirPods holder.

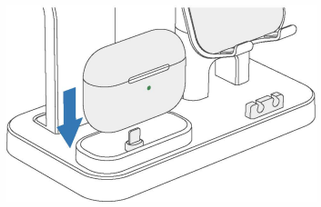

6. Insert the 2-in-1 phone cable into the base, and sort out 2 cables on the silicone hole.

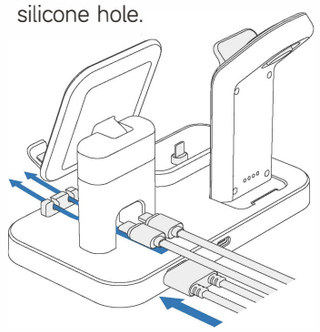

7. Choose the right cable to charge.

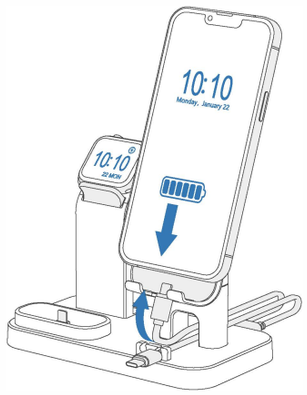

WARM TIPS

1.

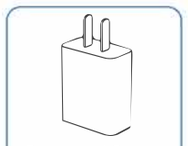

Recommend Charger
✔ 5V4.0A

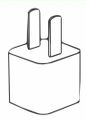

Do not use the regular Apple adapter **(5V1A)**

2. Keep in mind to charge your device before it runs out of power, otherwise it will shorten the working life of your devices.

3. Reach us by your Amazon order detail page (select "order" "sold by" or "contact seller") or contact us via email for warranty or customer services about it.

Service Email:
Tina_service@Outlook.com

1 Year Warranty and Dedicated Customer Service.

物料号：ST-Q8说明书版本V1.4

反面

FCC Statement

This device complies with part 15 of the FCC rules. Operation is subject to the following two cond itions: (1) this device may not cause harmful interference, and (2) this device must accept any inte rference received, including interference that may cause undesired operation.
Caution: Changes or modifications not expressly approved by the party responsible for compliance could void the user's authority to operate the equipment.
NOTE: This equipment has been tested and found to comply with the limits for a Class B digital d evice, pursuant to part 15 of the FCC Rules. These limits are designed to provide reasonable prote ction against harmful interference in a residential installation. This equipment generates uses and c an radiate radio frequency energy and, if not installed and used in accordance with the instructions , may cause harmful interference to radio communications. However, there is no guarantee that int erference will not occur in a particular installation. If this equipment does cause harmful interferen ce to radio or television reception, which can be determined by turning the equipment off and on, t he user is encouraged to try to correct the interference by one or more of the following measures:

- Reorient or relocate the receiving antenna.
- Increase the separation between the equipment and receiver.
- Connect the equipment into an outlet on a circuit different from that to which the receiver is connected.
- Consult the dealer or an experienced radio/TV technician for help important announcement

Radiation Exposure Statement
The equipment complies with FCC radiation exposure limits set forth for an uncontrolled environment. During the operation of device a distance of 15 cm surrounding the device and 20 cm above the top surface of the device must be respected.