User manual

Preface

Dear Customers:

Thanks for choosing card cabinet lock offered by Kerong Industry (HK) Co ., Limited . Please read this 《User Manual》 carefully before using.

Thanks for your kind understanding and support.

1. Product Appearance

1.1 Lock body

Material: ABS

Size: 61*61*22 mm

2.2 Lock hook

Suitable lock hook for different installation ways.

2. Product Installation Dimension

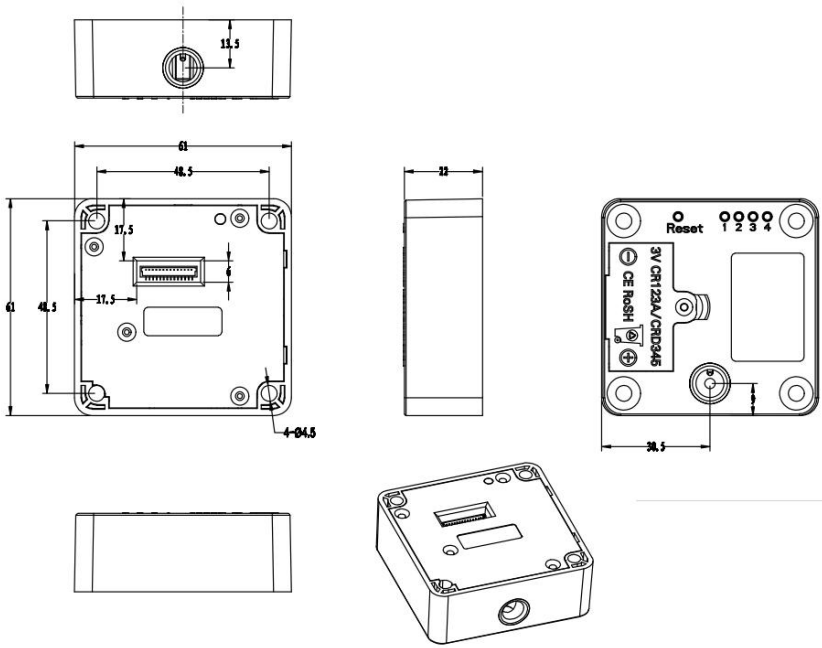

Lock body

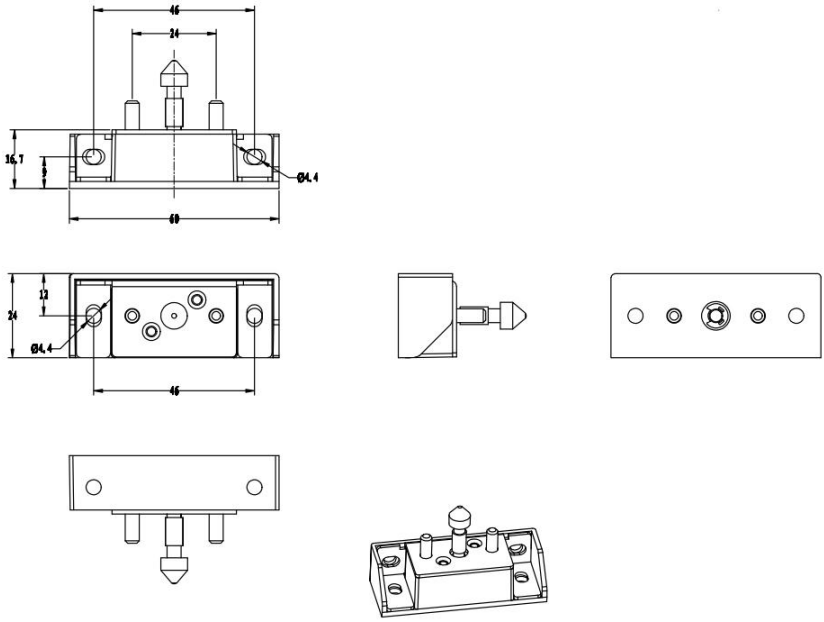

Hook

3. Product Functions

3.1 Parameters

Material	ABS for lock body shell
Power consumption	Load current < 200mA
	Locked-rotor current < 350mA
	Standby current < 20mA
	Statistic current < 50uA @3V
Working voltage	123A rechargeable lithium battery
	Voltage: 2.1V~3.3V
	Low voltage alarm: 2.5V±0.1V
	Ultimate low voltage: 2.1V, can operate the last unlock
Working environment	Working temperature -15℃ ~ +65℃
	Working humidity 10% ~ 90%RH
Anti-static	Air static 15KV
	Touch static 8KV

3.2 Functions & Features

Functions	Features
Sound prompt	Lock will prompt with sound when swipe correct/wrong card, battery is in low voltage, unlocking for a long time
Light prompt	Green: correct operation Red: wrong operation Blue: low voltage White: standby status

Alarm functions	**Low voltage alarm:** 1.When battery's voltage is lower than 2.5V, light will shine in blue and lock sounds "di di" for 8 times on every opening to remind user to change new battery. 2. When voltage is less than 2.1V, lock can't be locked until change new battery.
	Lock status alarm: 1. Lock will keep warning for 10s if it keeps unlocking status more than 30s. 2. ※ Lock status alarming function only exists in private mode. Press button 1+2 can enable/disable this function.
	Locking protection: Input wrong code/card, lock will shine in red twice and prompt with "di di".Wrong for 5 times continuously, lock will be unavailable for 5mins. During unavailable period: 1. Use manager card can make it available. 2. Input user card lock will prompt with "di di di di di" and light shines in red.
Card functions	1. Manager card: For setting user card, also can be used for emergency unlock in public mode. 2. User card: Only be used for unlocking. 3. Delete card: For deleting all user cards at one time, or delete a specific card. 4. Master card: For emergency unlocking.
Button functions	Button 1: Set manager card and user card. Button 2: Set delete card. Button 3: Change working mode. Button 4: Set Master card Reset: Reset the lock.
Functional cards	1. Change working mode by card. 2. Enable & disable lock status alarm function by card. 3. Enable & disable lock sound by card.

	4. Function cards can be encrypted. Only these encrypted function cards can set the lock. 5. Users can use their own cards that are compatible with our lock, but function cards only can be Mifare 1 card.

4.Operations

4.1 Public Mode

4.1.1 Mode introduction

Lock keeps unlocking under public mode, manager card should be programmed first(manager card can use for emergency unlock). Any card to lock and same card to unlock.

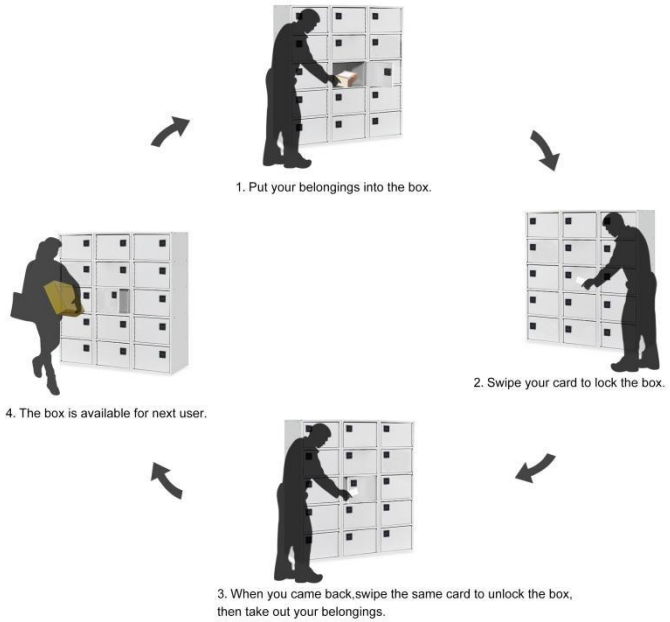

4.1.2 Set lock into public mode

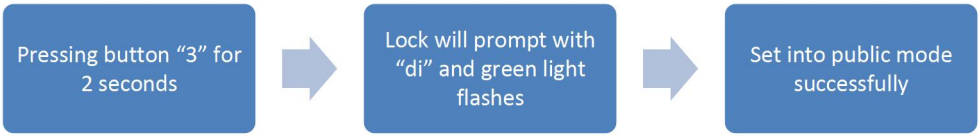

4.1.3 Set manager card

Notice:
1. While green light is flashing, user can set manager card continuously.
   One lock can have max 3pcs manager cards.
2. Manager card can be used for emergency unlock in public mode.

4.1.4 Set user card

※ In public mode, no need to set user card. Input any card can lock, then same card to unlock.

4.1.5 How to use user card

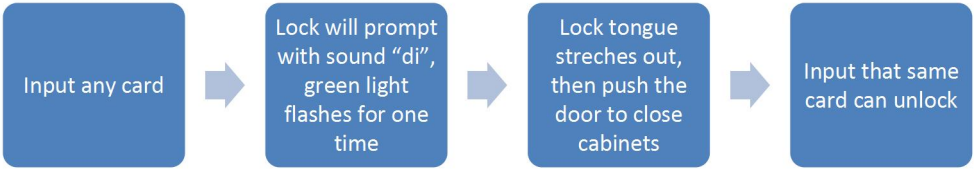

4.2 Private Mode

4.2.1 Mode introduction

Lock keeps locking under private mode, manager card and user card should be programmed first(manager card only for programming user card). Push the door to close, and use the user card to unlock.

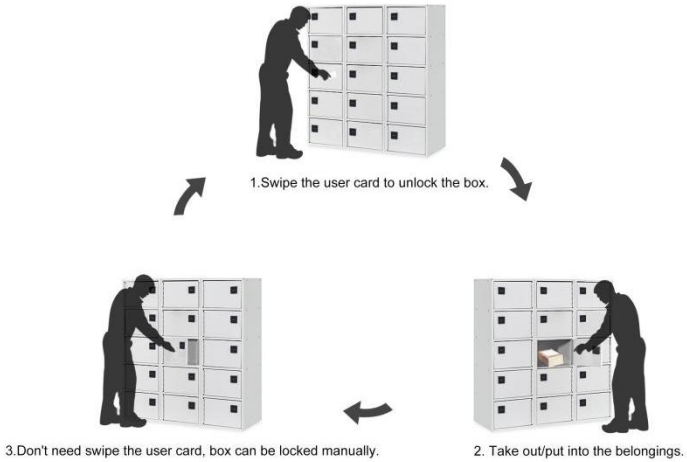

4.2.2 Set lock into private mode

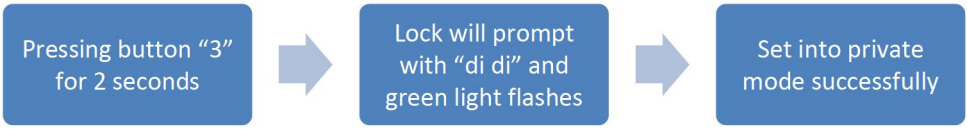

4.2.3 Set manager card

Notice:
1. While green light is flashing, user can set manager card continuously.
   One lock can have max 3pcs manager cards.
2. Manager card cannot use for emergency unlock, just for setting user card.

4.2.4 Set user card

Notice:
1. While green light is flashing, user can set user card continuously.
   One lock can have max 30pcs user cards.

4.2.5 How to use user card

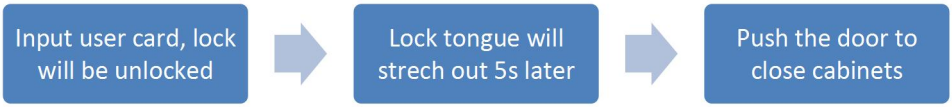

4.2.6 Set delete card

Notice:
1. While green light is flashing, user can set delete card continuously.
   One lock can have max 10pcs delete cards.
2. Swipe the delete card, all user cards will be invalid, then need to set again.

3. If you want to delete one user card at one time, please let us know in advance.

4.3 Limited Public Mode

4.3.1 Mode introduction

Lock keeps locking first under limited public mode, manager card and user card should be programmed first(manager card only for programming user card). Lock will keep unlocking after unlocked, then swipe user card, push the door can close the box.

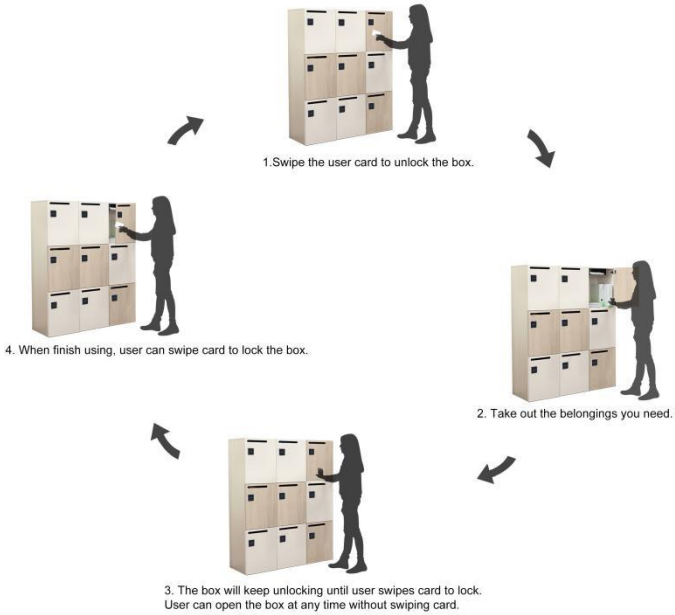

4.3.2 Set lock into limited public mode

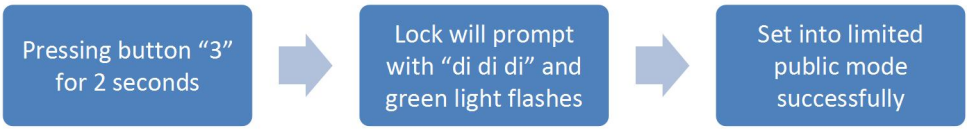

4.3.3 Set manager card

Notice:
1. While green light is flashing, user can set manager card continuously.
   One lock can have max 3pcs manager cards.
2. Manager card cannot be used for emergency unlock, just for setting user card.

4.3.4 Set user card

Notice:
1. While green light is flashing, user can set user card continuously.
   One lock can have max 30pcs user cards.
2. If user card is lost, you can use manager card to set a new user card to unlock.

4.3.5 How to use user card

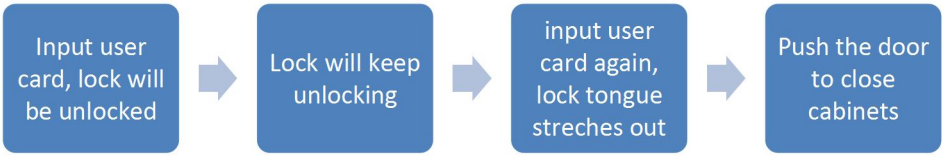

4.3.6 Set delete card

Notice:
1. While green light is flashing, user can set delete card continuously.
   One lock can have max 10pcs delete cards.
2. Swipe the delete card, all user cards will be invalid, then need to set again.
3. If you want to delete one user card at one time, please let us know in advance.

5.Reset lock

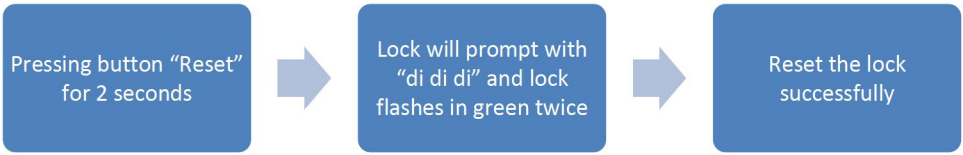

Notice:
After resetting, the lock will be factory setting and all cards are invalid, need to set cards again.

Technology Change Life

KERONG INDUSTRY (HK) CO., LIMITED

ADD: 2nd Floor, Tonghe Industry Park, Fuping North Rd Pingdi Street,

Longgang District, Shenzhen, Guangdong, China

Tel: 0755-28396063 Fax: +86-755-83117533

Website: www.kerong.hk

http://szkerong.en.alibaba.com/

Email：kr30@kerong.hk

§ 15.19 Labelling requirements.
This device complies with part 15 of the FCC Rules. Operation is subject to the following two conditions: (1) This device may not cause harmful interference, and (2) this device must accept any interference received, including interference that may cause undesired operation.

§ 15.21 Information to user.
Any Changes or modifications not expressly approved by the party responsible for compliance could void the user's authority to operate the equipment.

§ 15.105 Information to the user.
Note: This equipment has been tested and found to comply with the limits for a Class B digital device, pursuant to part 15 of the FCC Rules. These limits are designed to provide reasonable protection against harmful interference in a residential installation. This equipment generates uses and can radiate radio frequency energy and, if not installed and used in accordance with the instructions, may cause harmful interference to radio communications. However, there is no guarantee that interference will not occur in a particular installation. If this equipment does cause harmful interference to radio or television reception, which can be determined by turning the equipment off and on, the user is encouraged to try to correct the interference by one or more of the following measures:
-Reorient or relocate the receiving antenna.
-Increase the separation between the equipment and receiver.
-Connect the equipment into an outlet on a circuit different from that to which the receiver is connected.
-Consult the dealer or an experienced radio/TV technician for help.