UNITARY CONTROLLER

Honeywell Unitary Controllers provide flexible, freely programmable, demand-led control that delivers tangible benefits to reduce energy spending while driving new levels of functionality and efficiency in today's buildings.

They offer performance-based engineering with Niagara 4 and enable Single-Tool-Engineering throughout the whole Building Management System with cost-effective installation. These controllers contain integrated Bluetooth for an easy connection to commissioning apps.

These new controllers offer BACnet™ RJ45 (IP), T1L (IP), or MSTP as a backbone interface and Sylk™ and Modbus RTU as subinterface, flexible universal input/output (UIO), power relay, and solid-state relays (SSR).

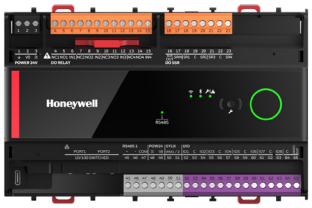

Honeywell Unitary Controllers are available in large and small housing options.

FEATURES AND HIGHLIGHTS

SIMPLE AND FLEXIBLE ENGINEERING

- UIOs configurable as analog input, binary input, analog output, or binary output.
- High inrush current relays.
- Solid-state relays with increased current support compared to standard Triac outputs.
- Sylk™ bus two-wire polarity insensitive interface connects to Honeywell Sylk™ wall modules without hardware I/O.
- Modbus RTU for integration.
- Daisy chain ethernet connection ensures reliable data speed over greater distance.
- Engineering tools including function block library and sample applications ensuring a consistent experience from the room, plant controllers, and supervisor.

EFFICIENCY AND SAFETY ON SITE

- Mobile wireless commissioning independent of local setup IT infrastructure (for Bluetooth variants only).
- Easy to install into fuse box (DIN43880) or on DIN rail, surface mount.
- Optional terminal covers for protection, thereby eliminating the need for cabinet enclosures.
- Color-coded, removable terminal blocks to simplify wiring and replacement.
- Live debugging and fast differential download for application changes to limit downtime to a minimum.
- Power failure detection and data recovery.

EASY UPGRADE TO IP

- RJ45 ethernet and twisted pair T1L available as IP communication backbones.
- Increased network speeds compared to traditional building automation systems.
- Support of standard BMS and IT protocols, such as BACnet™, offering an open system for interconnectivity.
- Reuse of installed wires as T1L uses two core twisted pair cables with screw terminals.
- Honeywell T1L devices will support daisy chains with distances between devices of up to 200 m, way above the 100 m limit of standard RJ45 Ethernet and allowing greater wiring lengths .

Honeywell

CONTROLLER PART NUMBERS DESCRIPTION

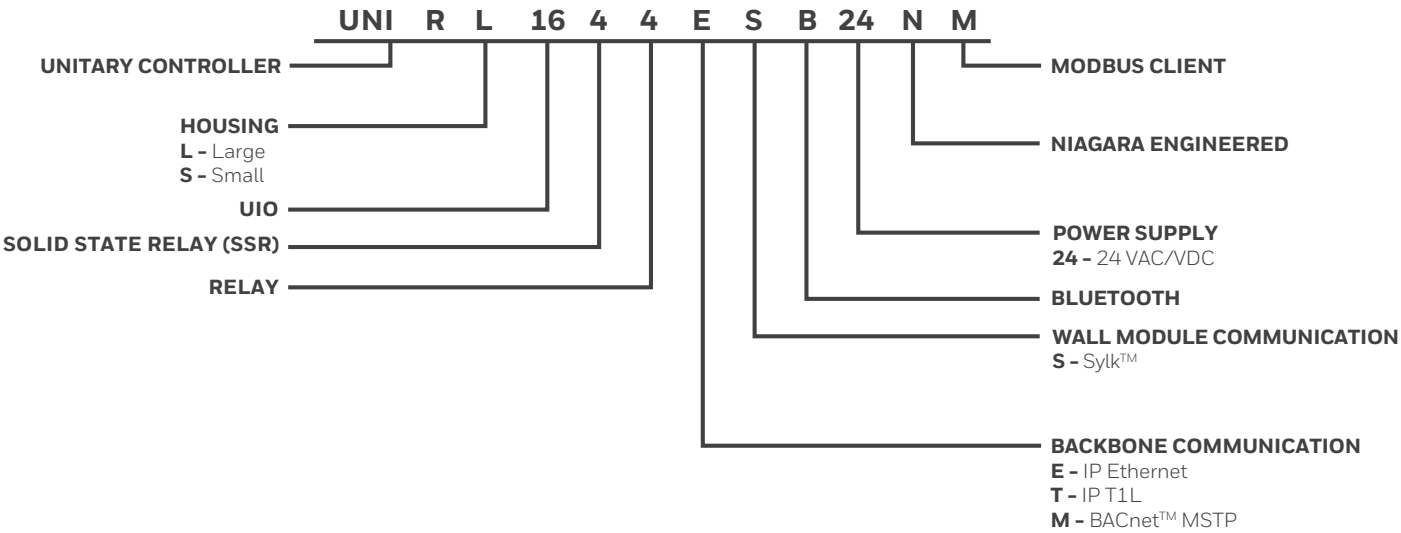

PART NUMBERS

UNITARY CONTROLLER PART NUMBERS

PART NUMBER	HOUSING	UNIVERSAL IO	SOLID STATE RELAY (SSR)	RELAY	COMMUNICATION	SYLK™ BUS	BLUETOOTH
UNI-RS0844ES24NM	Small	8	4	4	IP	Yes	No
UNI-RS0844ESB24NM	Small	8	4	4	IP	Yes	Yes
UNI-RS0844MS24NM	Small	8	4	4	MSTP	Yes	No
UNI-RS0844MSB24NM	Small	8	4	4	MSTP	Yes	Yes
UNI-RS0844TS24NM	Small	8	4	4	T1L	Yes	No
UNI-RS0844TSB24NM	Small	8	4	4	T1L	Yes	Yes
UNI-RL1644ES24NM	Large	16	4	4	IP	Yes	No
UNI-RL1644ESB24NM	Large	16	4	4	IP	Yes	Yes
UNI-RL1644MS24NM	Large	16	4	4	MSTP	Yes	No
UNI-RL1644MSB24NM	Large	16	4	4	MSTP	Yes	Yes
UNI-RL1644TS24NM	Large	16	4	4	T1L	Yes	No
UNI-RL1644TSB24NM	Large	16	4	4	T1L	Yes	Yes

ACCESSORIES OR REPLACEMENT PARTS

PART NUMBER	DESCRIPTION
CW-Cov-L-Unitary	Terminal cover for the L-version of the unitary controller
CW-Cov-S-Unitary	Terminal cover for the S-version of the unitary controller
10BASE-T1L-ADAPT	IP-T1L single pair media adapter that allows converting 10BASE-T traffic to 10BASE-T1L
SCRW-TB-UNI-L	Screw terminals - Unitary controllers kit
IO-JUMPER-4-10	4-pin relay output jumper to connect 4 relay in terminals (sold in pack of 10)

DIMENSIONS

LARGE HOUSING

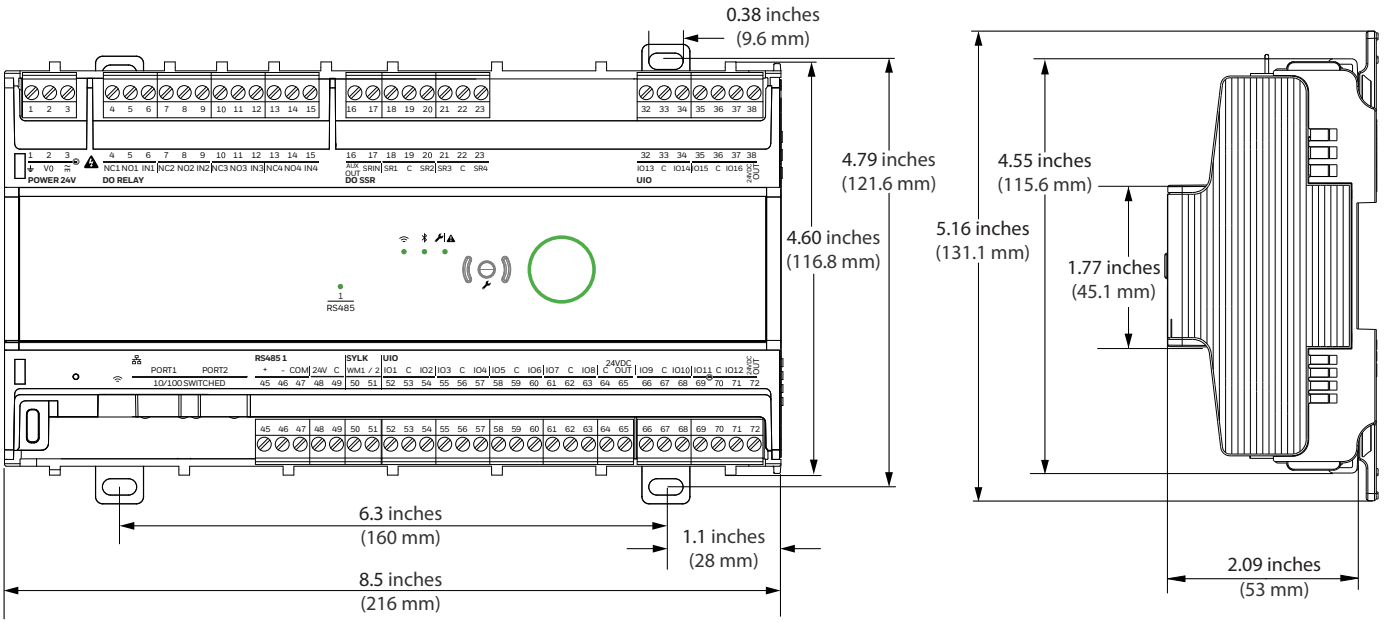

SMALL HOUSING

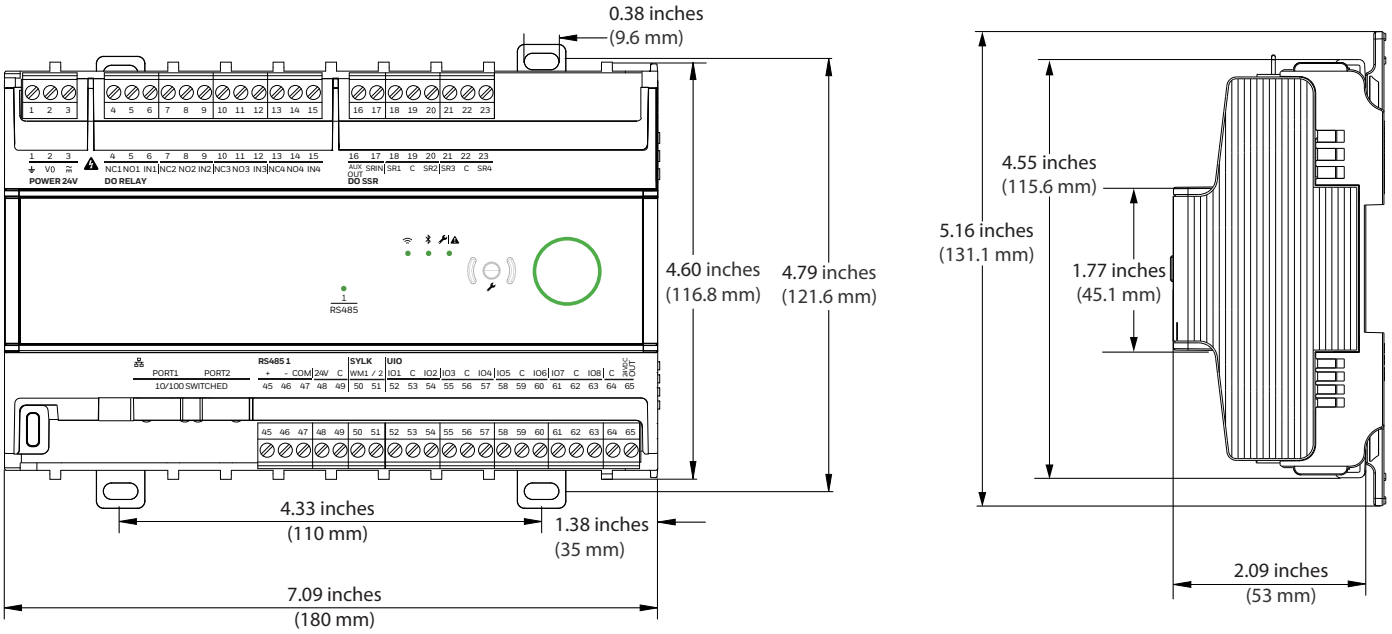

All dimensions are in inches (mm).

WEIGHT AND DIMENSIONS	
PARAMETER	**SPECIFICATION**
Dimension (L x W x H)	Large - 8.5 inches x 4.7 inches x 2.3 inches (216 mm x 121.6 mm x 59.35 mm) Small - 7.1 inches x 4.7 inches x 2.3 inches (180.34 mm x 121.6 mm x 59.35 mm)
Weight	Large - 1.256 lbs. (570 grams) Small - 1.064 lbs. (483 grams)
Mounting	Mounting in fuse boxes (DIN43880), on DIN rails or surface mounted with optional protection covers.

INTERFACE - IP, MSTP AND T1L MODEL

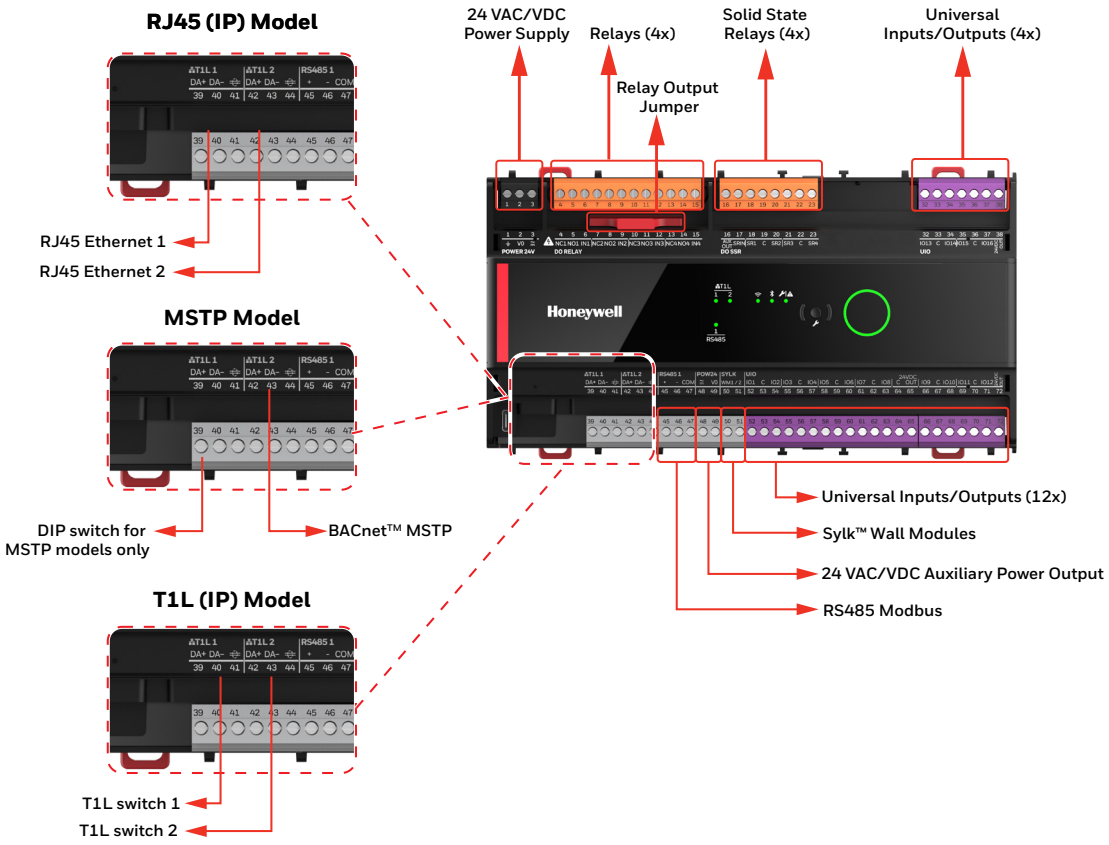

SYSTEM OVERVIEW - IP, MSTP AND T1L MODEL

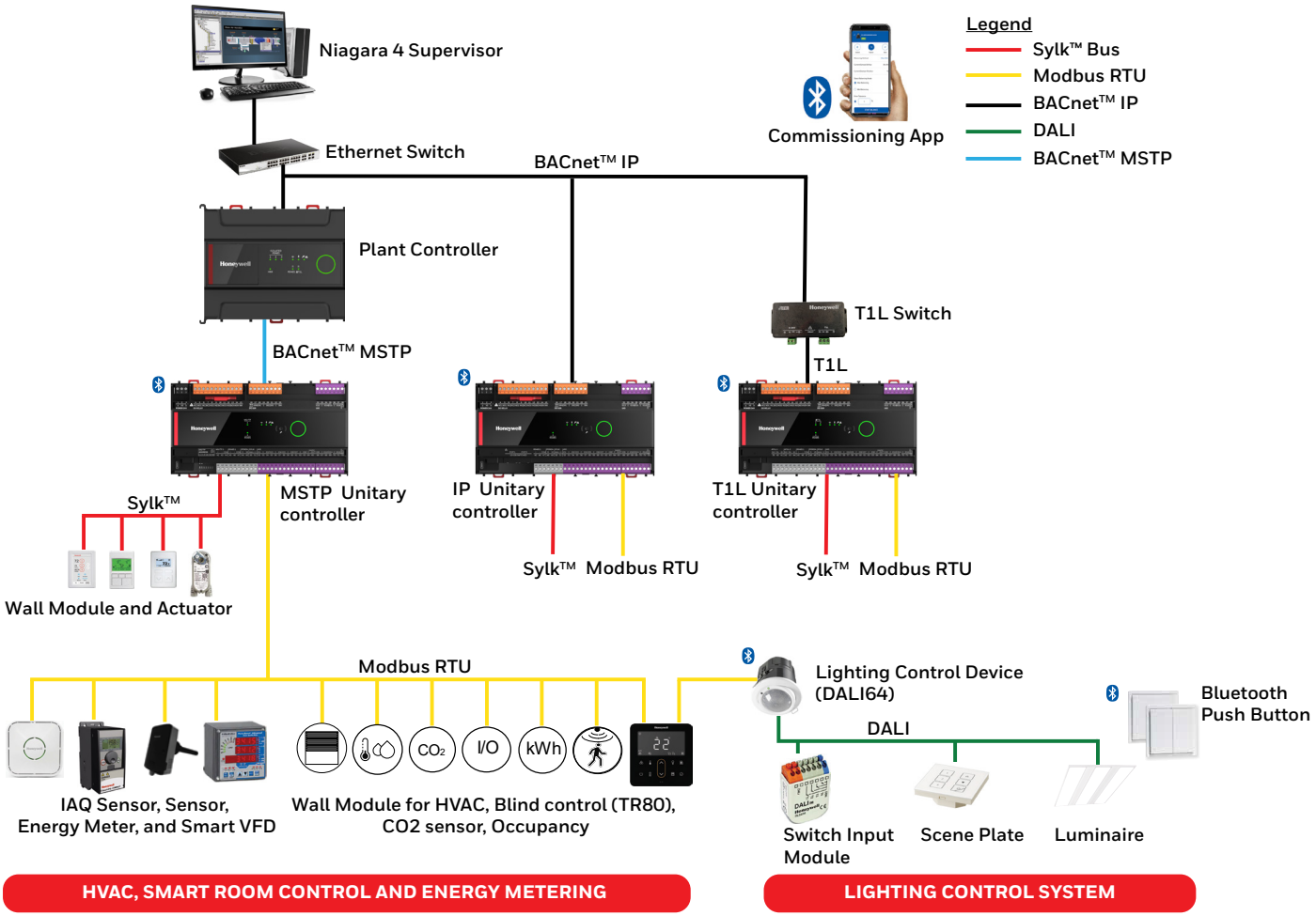

PRODUCT SPECIFICATION

HARDWARE	
PARAMETER	**SPECIFICATION**
CPU	Crossover processor NXP I.MRT, Cortex M7
Memory capacity	16 MB QSPI Flash, 16 MB SDRAM
Ethernet	2 x RJ45 Ethernet ports with integrated fail-safe for daisy-chain
Real Time Clock	24 hours backup after power failure After 24 hours, the time will reset to factory default time until the user performs a BACnet™ Time Sync
Small LEDs	Transmission or reception of communication signal (green)
Large LED	Controller status (Green, Yellow, and Red)

ELECTRICAL	
PARAMETER	**SPECIFICATION**
Rated Input Voltage	20 - 30 VAC/VDC
Nominal Current Consumption	• **IP model :** 4 VA • **MSTP model :** 4 VA • **T1L model :** 4 VA
Full Load Current Consumption (Maximum load including external loads, Sylk™, Communication, Bluetooth, Universal IO output, and 24 VDC output, excluding the load on the SSRs).	• **IP model :** 30 VA • **MSTP model :** 30 VA • **T1L model :** 30 VA
Frequency Range	50 - 60 Hz
Auxiliary Power Output	24 VAC/VDC at 75 mA
Impulse Voltage	330 V

OPERATIONAL ENVIRONMENT	
PARAMETER	**SPECIFICATION**
Storage Temperature	-40 °F to 150 °F (-40 °C to 66 °C)
Operation	32 °F to 122 °F (0 °C to 50 °C)
Humidity	5 % to 95 % RH., non-condensing
Protection	IP20, NEMA -1
Pollution Level	2

SUPPORTED DEVICES	
Sylk™ Wall Modules	TR40, TR40-H, TR40-CO2, TR40-H-CO2, TR42, TR42-H, TR42-CO2, TR42-H-CO2, TR71, TR71-H, TR75, TR75-H, TR120 (TR75-E), and TR120-H TR75-HE (emulation mode only)
Sylk™ Sensors	C7400S Sylk™ Sensor
Sylk™ Actuators	MS3103, MS3105, MS3110 (5 Nm), and MS3120 (10 Nm) spring return Direct Coupled Actuators (DCA)
Analog Actuators	MS4103, MS4105, MS7403, MS7405, MS7503, MS7505, MS8103, MS8105 spring return Direct Coupled Actuators (DCA)
Hardwired Wall Modules	T7460 A, B, C, D, E, F and T7770 A, B, C, D, E, F, G
Modbus Devices	TR80UWD, TR80UWA, TR80BWD, TR80BWA, TR80UBD, TR80UBA, TR80BBD, TR80BBA, DALI64MODPSUF, and DALI64MODPSUS **Note:** The Modbus can be freely programmed and thus it is also possible to communicate with third-party devices from other manufacturers.

SOLID STATE RELAY (SSR)
SSR works with maximum 24 VAC/VDC
1.5 A constant; 3.5 A inrush for 0.1 seconds per SSR output.
Factory installed jumper between 24 VAC or 24 VDC supply and SSR input shared by all SSRs.

RELAYS
Up to 277 VAC/230 VAC (+20 %)
3 contacts per relay (Normally open (NO), Normally closed (NC), Common (IN)).
10 A constant current on normally open contact and 100 A inrush for 100 ms.
Total current across all relays is limited to 12 A if all commons are connected via a relay jumper.

PRODUCT SPECIFICATION

UNIVERSAL IO	
PARAMETER	**SPECIFICATION**
AO	• Voltage output with 0(2)...11 V direct/reverse with -3 mA ...+20 mA. • Current output with 0(4)...20 mA direct/reverse. • **Hardwired wall modules:** LED Control.
UI	• 0(2)...10 V direct/reverse or 0(4)...20 mA input. • **Sensors:** 10 K Ohm NTC Type II, 10K-3 NTC, 10K3A1, 20 K ohm NTC, PT100, PT1000, NI1000TK5000, NI1000 Class B DIN43760, PT3000, 100 Ohm to 100 k Ohm resistive (custom characteristic). • **Hardwired wall modules:** space temperature, space temperature setpoint, fan speed override, occupancy mode override. • Dry contact binary input with direct/reverse. • Pulse input with maximum frequency 100 Hz, minimum pulse width 5 ms. Compatible with the S0 interface for pulse counters.

COMMUNICATION	
PARAMETER	**SPECIFICATION**
Protocol supported	• BACnet™ IP (RJ45 or T1L) • BACnet™ MSTP • Modbus RTU (Modbus client only) • Bluetooth (optional)
IP Addressing Modes	• **Dynamic**: DHCP and Link-local • **Static**
Sylk™	2-wire, polarity-insensitive

T1L COMMUNICATION	
PARAMETER	**SPECIFICATION**
10BASE-T1L Standard	802.3cg-2019
Connection	Screw terminal, auto MDI-X
Cable Type	Single twisted pair
Distance	218 yards(200 meters) maximum to Honeywell controller with failure-tolerant daisy chain. 984 yards(900 meters) maximum to any other T1L device without a daisy chain.
Bus speed	10 Mbs/s

STANDARDS AND APPROVALS
CE mark
BACnet™ BTL®-Listed; IP Unitary model as BACnet™ Building Controller (B-BC) and MSTP Unitary model as BACnet™ Advanced Application Controller (B-AAC); (BTL certification is in the process)
UL 916
UL/ULC 60730-1
FCC/IC Product Class B
UL 2043

APPLICABLE TECHNICAL LITERATURE	
REFERENCE	**TITLE**
31-00572-01	Honeywell Unitary Controller - 24 V - Mounting Instructions
31-00573-01	Honeywell Unitary Controller - 24 V - Installation Instructions

By using this Honeywell literature, you agree that Honeywell will have no liability for any damages arising out of your use or modification to, the literature. You will defend and indemnify Honeywell, its affiliates and subsidiaries, from and against any liability, cost, or damages, including attorneys' fees, arising out of, or resulting from, any modification to the literature by you.

Honeywell Building Technologies
715 Peachtree St NE
Atlanta, Georgia 30308, USA
Honeywell Building Control

Honeywell Products and Solutions
SARL, Z.A. La Pièce, 16, 1180 Rolle
Switzerland
Honeywell Building Control

@U.S. Registered Trademark
© 2023 Honeywell International Inc.
31-00571-01 | Rev. 01-23

Honeywell