FEIT ELECTRIC

Model: DOORVIDEOLOCKAGBK
DOORVIDEOLOCKAGNK

DOOR LOCK WITH CAMERA DOORBELL

IMPORTANT SAFETY INSTRUCTIONS AND INSTALLATION GUIDE

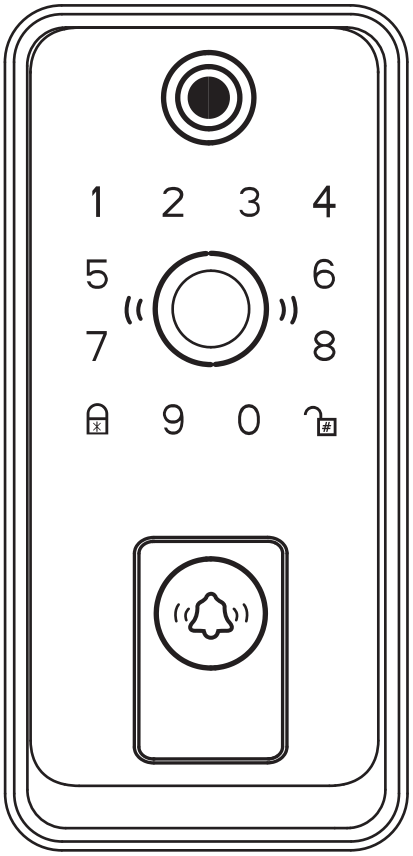

READ BEFORE INSTALLATION
SAVE THESE INSTRUCTIONS

24/7 HELP

REV122325

We appreciate the trust and confidence you have placed in Feit Electric through the purchase of this product. We strive to continually create quality products designed to enhance your home. Visit us online to see our full line of products available for your home improvement needs. Thank you for choosing Feit Electric.

Table of Contents

Safety Information 2
FCC Statement 2
Warranty 2
Pre-Installation 3
Tool Required 3
Hardware Included 3
Door Lock Schematic 4
Product Specifications 4
Product Overview 5
Top View of Door Opening Direction 5
Installation 6-8
Outdoor ON/Off Lock 8-9
Indoor ON/Off Lock 9
APP Setup 10
Restore Factory Settings 10
Emergency Power Supply 11
Local Assistive Features 11

Safety Information

For your safety, always remember to:

- ☐ **Install the rechargeable battery pack only after the lock is fully installed and aligned.**
- ☐ **Use only the supplied or approved rechargeable battery pack.**
- ☐ **Recharge promptly when the low-battery alert sounds. Avoid letting the pack fully drain.**
- ☐ **Keep the fingerprint sensor and camera lens clean and dry for reliable recognition and image quality.**
- ☐ **Store the mechanical backup key in a safe but accessible place in case of emergency.**
- ☐ **Ensure the lock is within range of a 2.4 GHz Wi-Fi network for stable remote access.**
- ☐ **Do not disassemble, puncture, or expose the battery pack to heat, fire, or water.**
- ☐ **Test lock and camera functions with the door open before final use.**

FCC STATEMENT

Supplier's Declaration of Conformity:
47 CFR § 2.1077 Compliance Information
Responsible Party: Feit Electric Company
4901 Gregg Road, Pico Rivera, CA 90660, USA
www.feit.com
Unique Identifier: DOORVIDEOLOCKAGBK, DOORVIDEOLOCKAGNK

This device complies with part 15 of the FCC Rules. Operation is subject to the following two conditions: (1) This device may not cause harmful interference, and (2) this device must accept any interference received, including interference that may cause undesired operation. Note: This equipment has been tested and found to comply with the limits for a Class B digital device, pursuant to part 15 of the FCC Rules. These limits are designed to provide reasonable protection against harmful interference in a residential installation. This equipment generates, uses and can radiate radio frequency energy and, if not installed and used in accordance with the instructions, may cause harmful interference to radio communications. However, there is no guarantee that interference will not occur in a particular installation. If this equipment does cause harmful interference to radio or television reception, which can be determined by turning the equipment off and on, the user is encouraged to try to correct the interference by one or more of the following measures: Reorient or relocate the receiving antenna. Increase the separation between the equipment and receiver. Connect the equipment into an outlet on a circuit different from that to which the receiver is connected. Consult the dealer or an experienced radio/TV technician for help. Any changes or modifications not expressly approved by the manufacturer could void the user's authority to operate the equipment.

Limited Warranty

This product is warrantied to be free from defects in workmanship and materials for up to 1 year from date of purchase. If the product fails within the warranty period, please contact Feit Electric at info@feit.com, visit feit.com/contact-us for instructions on replacement or refund. REPLACEMENT OR REFUND IS YOUR SOLE REMEDY. EXCEPT TO THE EXTENT PROHIBITED BY APPLICABLE LAW, ANY IMPLIED WARRANTIES ARE LIMITED IN DURATION TO THE DURATION OF THIS WARRANTY. LIABILITY FOR INCIDENTAL OR CONSEQUENTIAL DAMAGES IS HEREBY EXPRESSLY EXCLUDED. Some states and provinces do not allow the exclusion of incidental or consequential damages, so the above limitation or exclusion may not apply to you. This warranty gives you specific legal rights, and you may also have other rights which vary from state to state or province to province.

TOOLS REQUIRED (NOT INCLUDED)

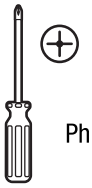

Phillips Screwdriver

NOTE: Hardware not shown to actual size.

HARDWARE INCLUDED

AA

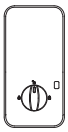

BB

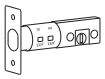

CC

DD

EE

GG

HH

II

JJ

KK

LL

Part	Description	Quantity
AA	Front Panel	1
BB	Rear Panel	1
CC	Latch	1
DD	Strike Plate	1
EE	Strike Box	1
FF	NFC Key Card	2
GG	Key	2
HH	Bore Hole Drawing	1
II	Screw Tube Spare (40mm)	2
JJ	Flat Tailed Screw (25mm)	2
KK	Sharp Tailed Screw (20mm)	4
LL	Rechargeable Battery	1

Door Lock Schematic

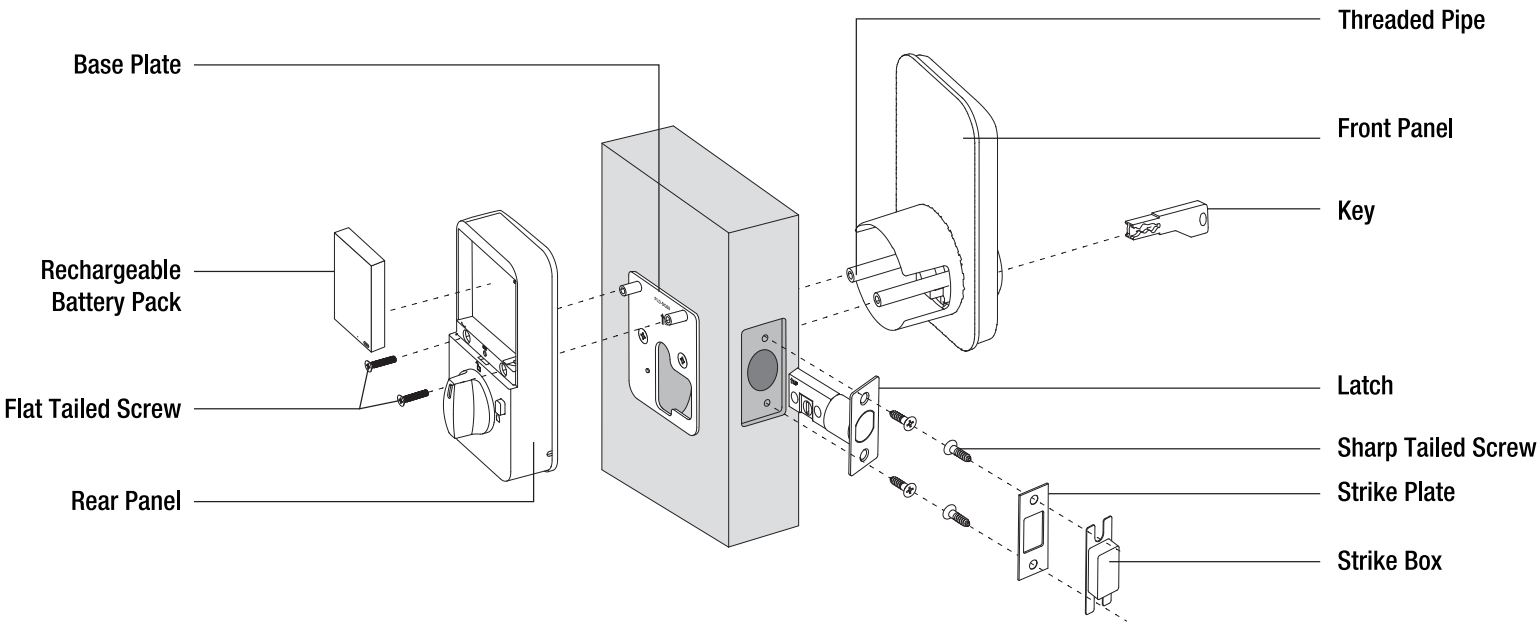

Product Specifications

Function	Content	Description
Unlocking Method	Fingerprint + Key Card + Feit App + Physical Key	
Total Number Of Users	300	Includes administrators and regular users.
Fingerprint	100	Register each fingerprint 5 times, using multiple angles for better accuracy.
Password	100	Enter your password twice, press [#] to confirm. (6-8 digits, both times must be the same)
Key Card	100	Supports the addition of 13.56 MHz key cards.
Scramble Code Length	Up to 26 digits	To prevent others from viewing your code, you may enter any random digits immediately before and after your password; the lock will ignore these extra numbers and unlock, provided the total sequence does not exceed 26 digits. 83618 137192 14710 Correct Password Random Digits
Emergency Power Supply	5V (DC)	USB-C power supply port.
Operating Temperature	-25°C~+65°C	
False Alarm	Support	After 5 consecutive incorrect attempts, the lock will be disabled for 1 minute.
Quick Lock	Quick Locking From Outside The Door	The [*] key on the panel can be used for locking or as a return key.
Battery	Rechargeable battery pack	3.7V 3000mAh Battery pack. USB-C port for recharging.

Product Overview

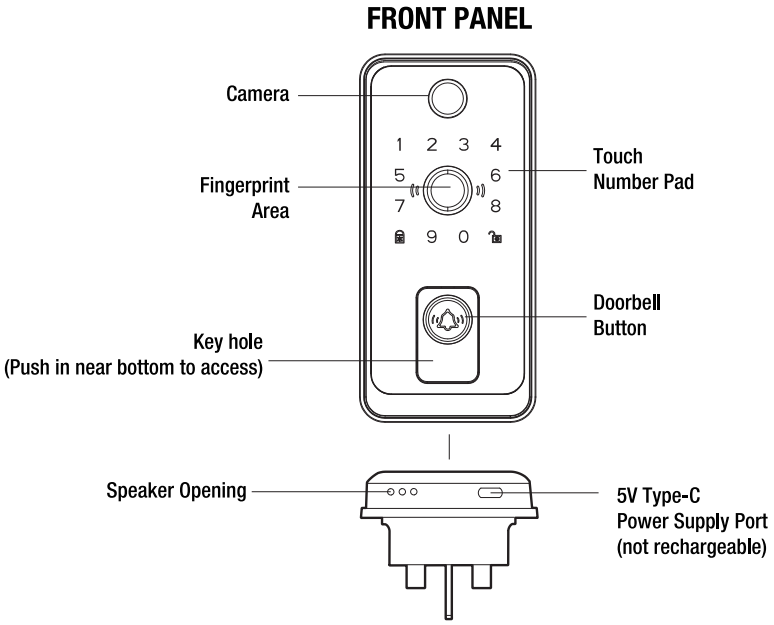

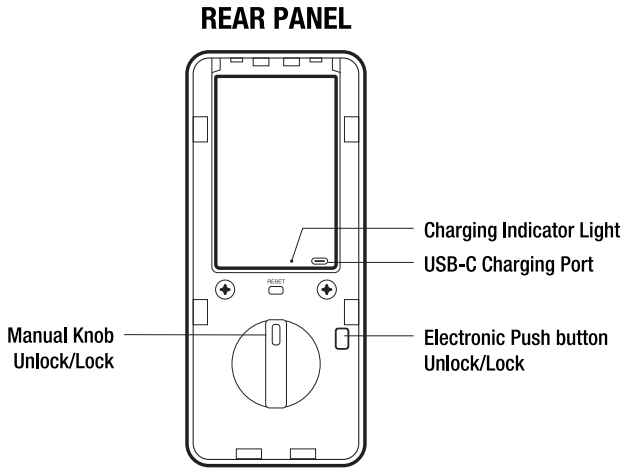

NOTE: Charge battery fully before use.

NOTE: Charging light indicator will turn red when charging and blue when fully charged.

Top View of Door Opening Direction

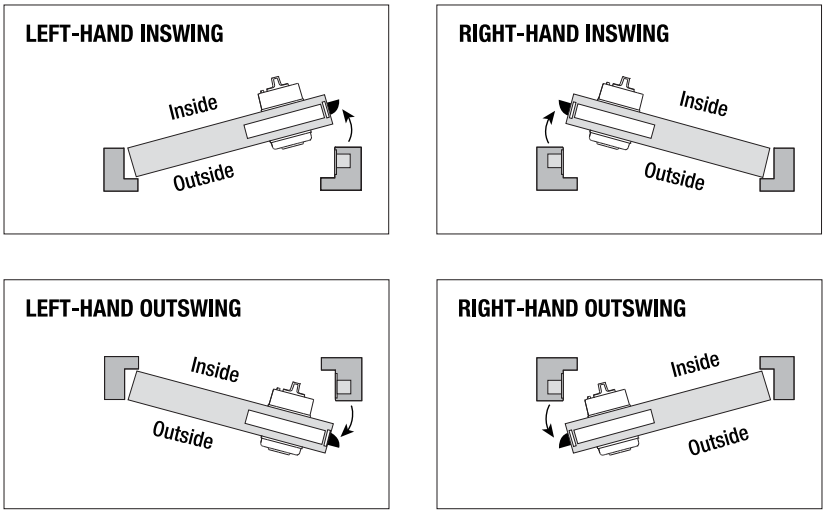

OPEN THE DOOR WITH YOUR LEFT HAND

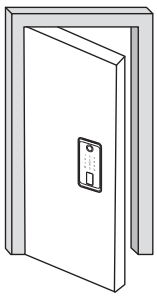

OPEN THE DOOR WITH YOUR RIGHT HAND

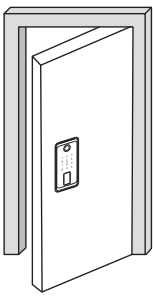

1 Measuring Door Dimensions

- ☐ Door Thickness: 1-3/8" to 2-1/8" (35–55 mm)
- ☐ Bore Hole (Main Opening) Diameter: 2-1/8" (54 mm)
- ☐ Latch Hole Diameter: 1" (25 mm)
- ☐ Backset (Distance from edge of door to center of bore hole): 2-3/8" (60 mm) or 2-3/4" (70 mm)

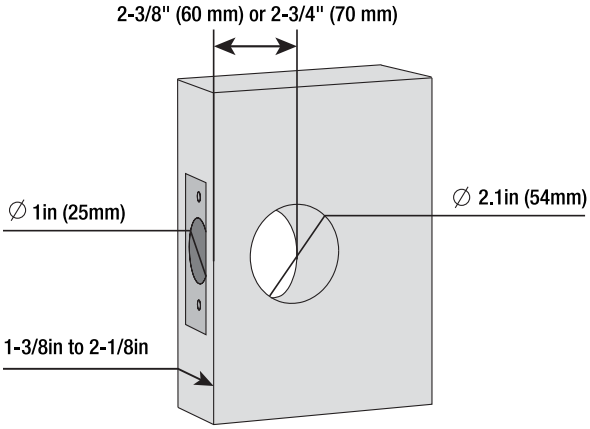

2 Installing the Strike Box and Strike Plate

- ☐ The locking hole should be at least 1 inch (25 mm) deep to allow the locking mechanism to extend fully.
- ☐ Secure the strike box (EE) and strike plate (DD)to the door frame using the two Sharp Tailed Screws(KK).

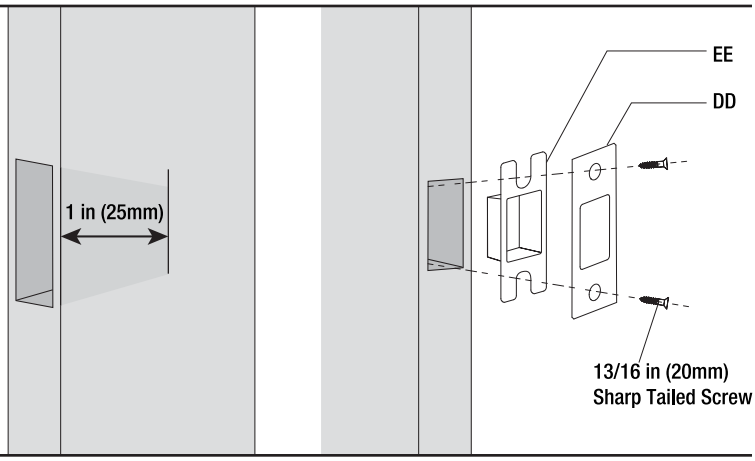

3 Selecting the Appropriate Latch Size

- ☐ Select or adjust the correct latch size for the lock hole (the factory default is a 2-3/8 inch (60 mm) latch).
- ☐ Ensure the latch slot is centered; if it is not, adjust it to the next position.

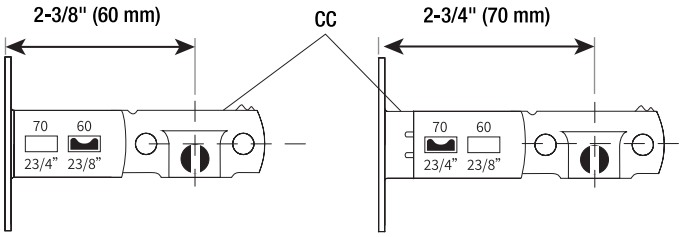

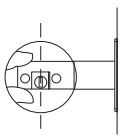

Correct ✓
Centered properly — no adjustment needed. Continue to the next step

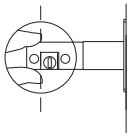

Wrong ✕
Not centered — adjust the slot holes before proceeding

> **NOTE:** Make sure the latch slot is centered. If it is not, adjust it to the next position.

4 Adjusting The Latch Length

- ☐ To adjust to a 70mm latch length, first fix the end of the latch (CC), then rotate the front end, then pull the front end of the latch outward.

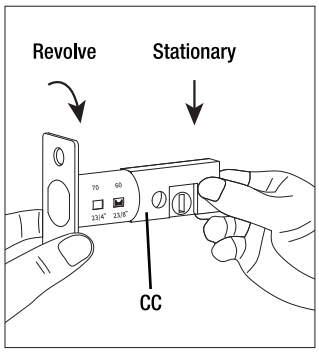

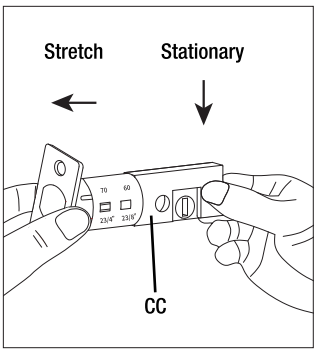

5 Adjusting The Lock Latch

- ☐ If you notice the latch (CC) protruding during adjustment, press it inward until it sits flush.
- ☐ After the front end of the latch (CC) is reset, the latch is at the 70mm position. The latch adjustment is now complete.

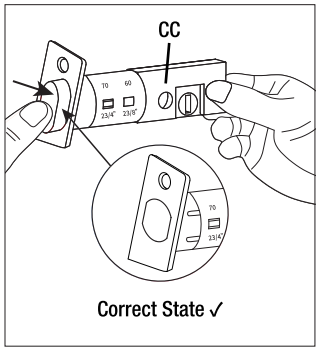

Correct State ✓

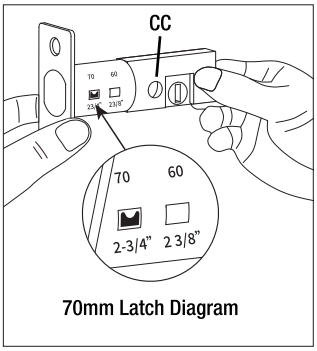

70mm Latch Diagram

6 Installing The Lock Latch

- ☐ Use two flat tailed-screws (JJ) to secure the latch (CC) to the door frame.
- ☐ Use a flathead screwdriver to check if the latch (CC) operates smoothly.

NOTE: Be sure the upward mark on the latch stays in the upright position.

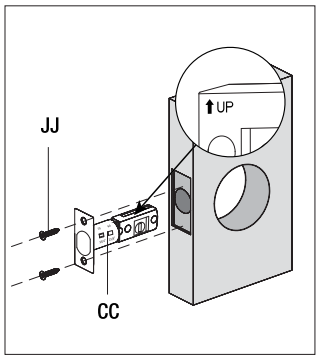

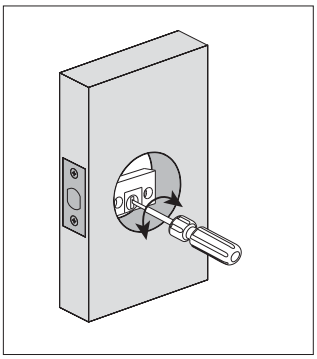

7 Installing the Door Lock

- ☐ The front panel aligns with the door hole and passes through the latch (the main connector passes underneath the latch).
- ☐ Open the battery cover, remove the two screws, and take out the mounting base. Ensure battery is not installed yet.

NOTE: Use the two longer screw tubes(HH) if the standard ones aren't long enough for your door thickness. Unscrew the existing tubes to replace them.

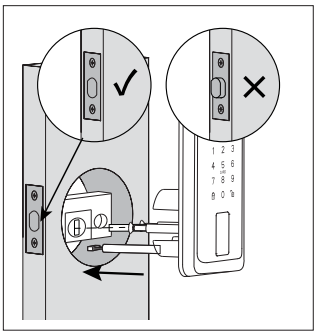

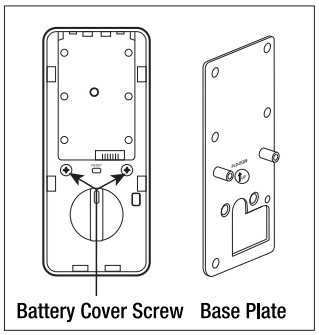

8 Adjusting the Base Plate

- ☐ Secure the base plate with two flat tail screws (do not overtighten to prevent the latch from deforming).
- ☐ Insert the main wire into the front panel socket, pushing firmly until fully seated (do not install the battery).

NOTE: Be sure the lock is In the unlocked state during installation.

NOTE: The base plate is vertical to the door edge.

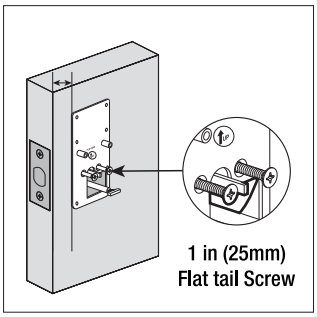

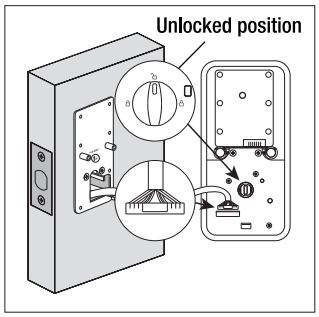

9 Securing and Tightening the Lock

- ☐ After connecting the wires, tuck the main wire back into the door frame and align the latch to fasten the rear panel.
- ☐ Secure and tighten the two screws previously removed from the battery cover.

NOTE: The rear panel is vertical to the door edge.

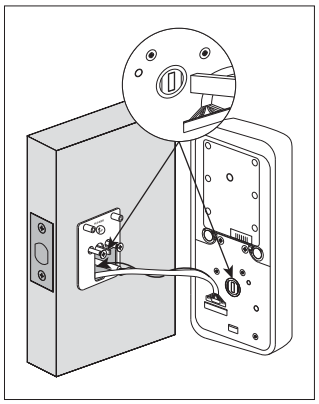

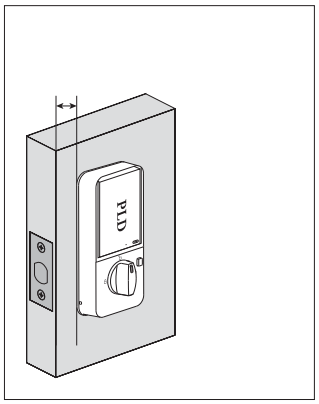

10 Inserting the Battery Pack

- ☐ Insert the battery pack into the back, then slide the battery cover back on.
- ☐ Ensure door is open. The door lock should begin to calibrate and protrude the latch bolt as a check.

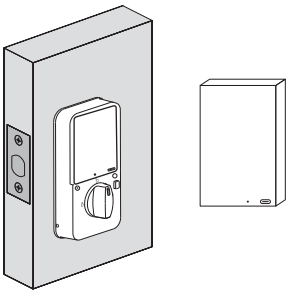

NOTE: Follow the correct battery orientation.

Using your Door Lock- Outdoor

1 Unlocking From Outside

- ☐ Fingerprint Unlocking

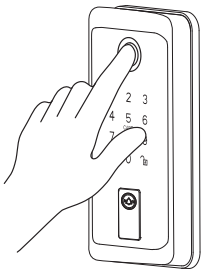

- ☐ Key Card Unlocking

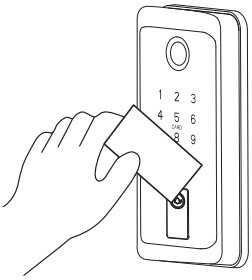

- ☐ Password Unlocking

User Password + #

- ☐ Mobile App Unlocking

- ☐ Key Unlocking

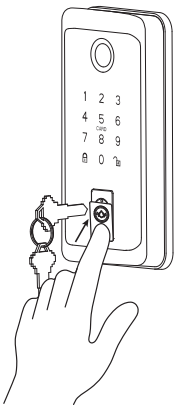

Using your Door Lock- Outdoor (continued)

2 Locking from Outside

- ☐ Auto-lock mode – The door automatically locks about 5 seconds after unlocking. You can adjust the timing in the app.
- ☐ Manual mode - Press the number key on the panel to wake up the device, then press [🔒].

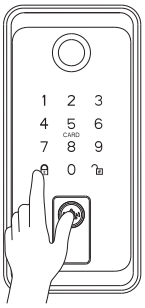

- ☐ Key mode - Press the bottom area of the cover to open the key access slot.

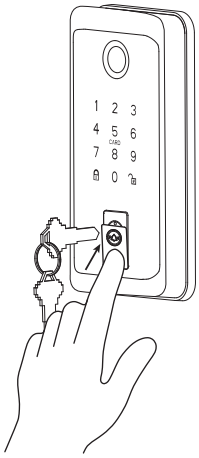

Using your Door Lock-Indoor

1 Unlocking from Inside

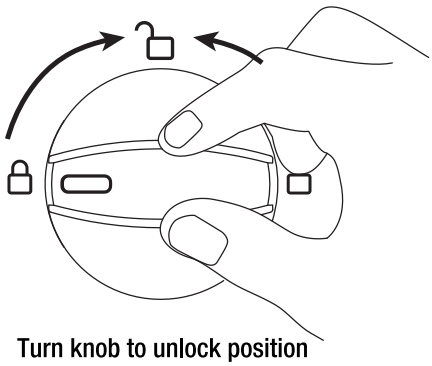

Turn knob to unlock position

- ☐ Electronic Lock/Unlock

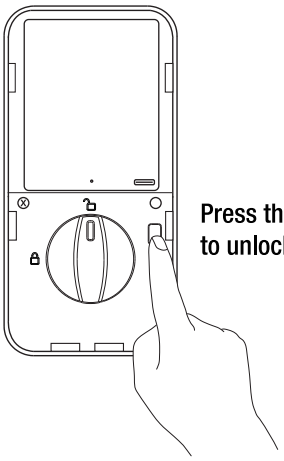

Press this button to unlock/lock

2 Locking from Indoors

- ☐ Auto lock mode - the device will lock automatically.
- ☐ Manual mode

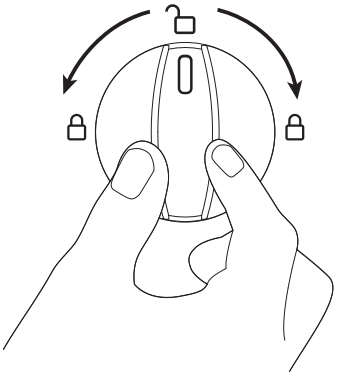

Rotate to the locked position

- ☐ Electronic Lock

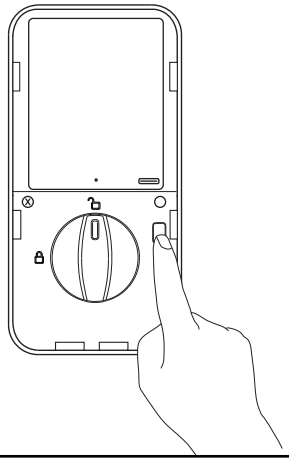

Download and install the Feit Electric App

- ☐ Search for the Feit Electric App in the App Store or Google Play Store.
- ☐ Download and install the Feit Electric App on your smart device.

Feit Electric App

Download on the App Store

GET IT ON Google Play

Set up the Door Lock using the Feit Electric App

- ☐ Make sure the door lock is in pairing mode. If it is not, see the pairing/reset instructions on page 10.
- ☐ Open the Feit Electric app and tap the “+” icon in the top-right corner.
- ☐ Confirm that Bluetooth is enabled on your mobile device, then check if the lock appears at the top of the screen.
- ☐ On the app home screen, tap the “+” icon or 'Add Device.'
- ☐ Press and hold the reset button located under the battery cover for 3–5 seconds to enter pairing mode.
- ☐ The indicator light will flash blue, signaling the lock is in pairing mode.
- ☐ Ensure your mobile device has Bluetooth enabled and is connected to the same Wi-Fi network.
- ☐ Select your lock from the list of nearby devices and follow the prompts to complete the connection.
- ☐ Once paired, the lock will automatically calibrate to detect the door’s opening direction.

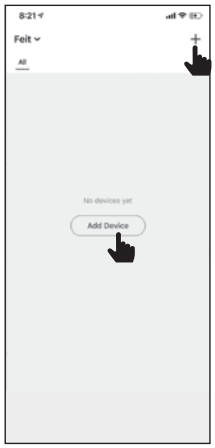

App Guide

- ☐ Scan to learn how to navigate the app features.

Restore Factory Settings

- When the door lock is reset to factory settings, all user keys will be cleared, and all local programming features will be reset to their original factory settings. Additionally, the app will be automatically unbound.

1 Method 1

- Open the battery cover on the back panel.

Press and hold the reset button for 5 seconds. → The keypad will light up and the countdown will begin. → A blue ring will light up, followed by a green ring to confim the reset. → Reset complete

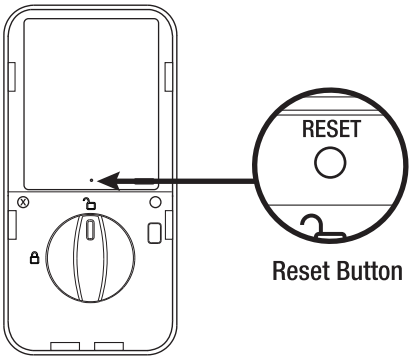

2 Method 2

- In the app, select 'Remove Device' from the settings menu.

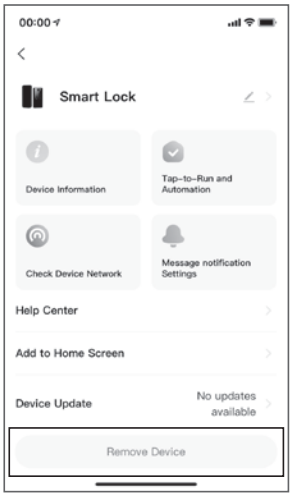

Emergency Power Supply

1 Using the Emergency Power Bank Port

- When the battery is depleted, use the emergency power bank port to supply power. The emergency power port provides temporary power only and does not recharge the battery.

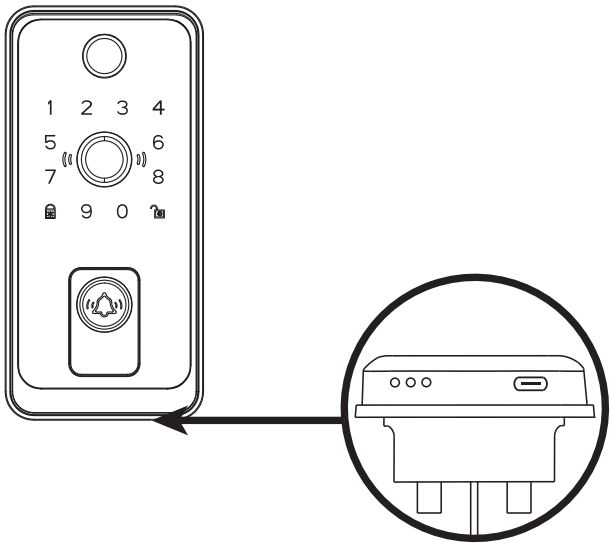

Local Assistive Features

1 Automatic Locking

- After unlocking, the lock will automatically lock and extend within 5 seconds. By default, this feature is turned off (you can customize the locking delay time between 5~60 seconds).

2 Key Function

- The key unlocking function is always available when the battery is completely drained or if the user password is forgotten.

3 Input Error Limit

- After 5 consecutive unsuccessful unlocks, the device will be locked for 1 minute.

4 Silent Mode

- Pressing the button will emit a beep sound (the prompt voice can be silenced).

5 Automated Unlock

- You can schedule automatic lock and unlock times to ensure the door operates on your preferred schedule.

6 Anti-Peeping Password Unlocking

- Users can prevent exposure of the unlocking password by entering random digits before and after the password, with a total length of 26 characters (as shown in the image).

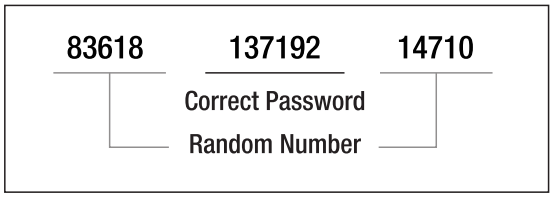

FCC Warning:

This equipment has been tested and found to comply with the limits for a Class B digital device, pursuant to part 15 of the FCC Rules. These limits are designed to provide reasonable protection against harmful interference in a residential installation. This equipment generates, uses and can radiate radio frequency energy and, if not installed and used in accordance with the instructions, may cause harmful interference to radio communications. However, there is no guarantee that interference will not occur in a particular installation. If this equipment does cause harmful interference to radio or television reception, which can be determined by turning the equipment off and on, the user is encouraged to try to correct the interference by one or more of the following measures:

- Reorient or relocate the receiving antenna.
- Increase the separation between the equipment and receiver.
- Connect the equipment into an outlet on a circuit different from that to which the receiver is connected.
- Consult the dealer or an experienced radio/TV technician for help.

Caution: Any changes or modifications to this device not explicitly approved by manufacturer could void your authority to operate this equipment.

This device complies with part 15 of the FCC Rules. Operation is subject to the following two conditions: (1) This device may not cause harmful interference, and (2) this device must accept any interference received, including interference that may cause undesired operation.

The device has been evaluated to meet general RF exposure requirement. This equipment complies with FCC radiation exposure limits set forth for an uncontrolled environment.
This equipment should be installed and operated with minimum distance 20cm between the radiator & your body.