SMART LOCK

INSTALLATION INSTRUCTIONS

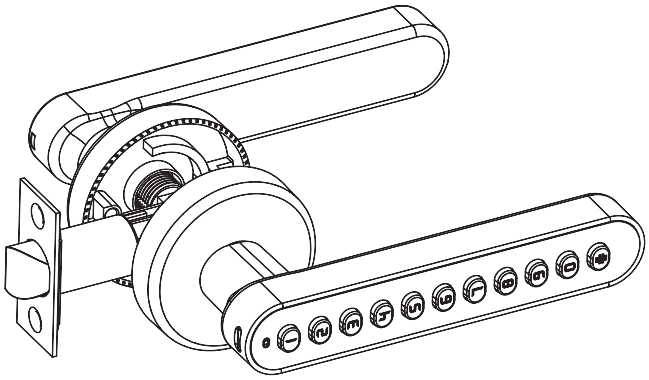

Scan the QR code to watch the settings video

Scan the QR code to watch the installation video

Please read this manual before operating your Smart Lock, and keep it for further reference.

TABLE OF CONTENTS

Product overview ——— 01

Door lock installation diagram ——— 02

Measuring door dimensions ——— 03

Door opening direction ——— 04-05

Door lock installation tutorial ——— 06-10

Tips and parameters ——— 11

Tuya APP how to use tutorial ——— 12-18

Product overview

Front Lock View

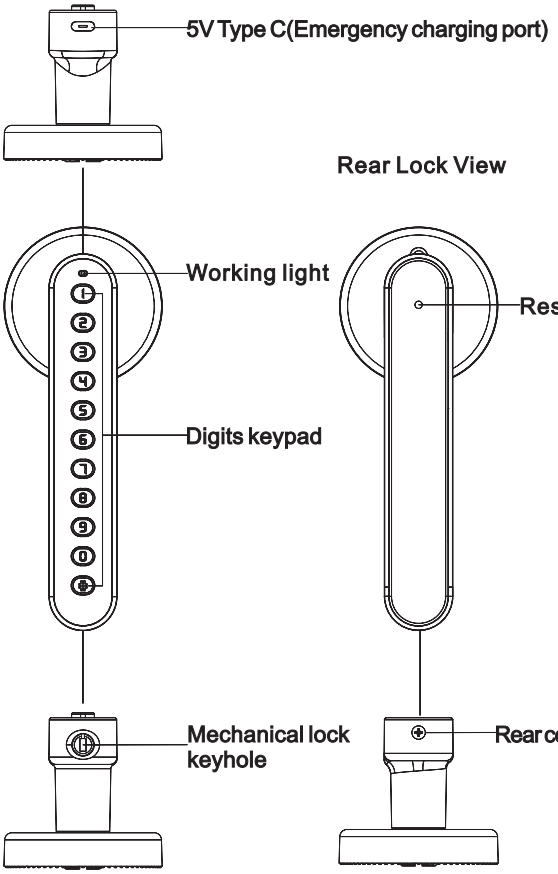

Rear Lock View

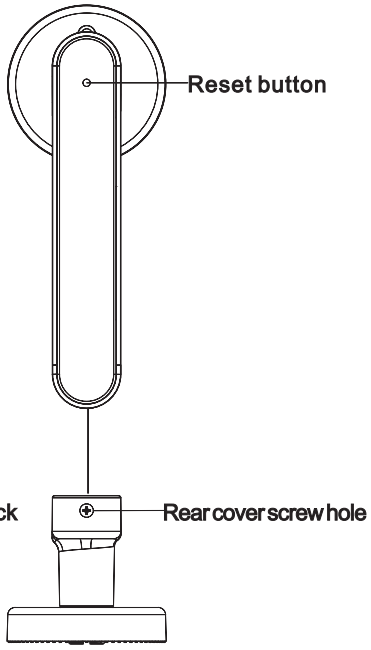

Door lock installation diagram

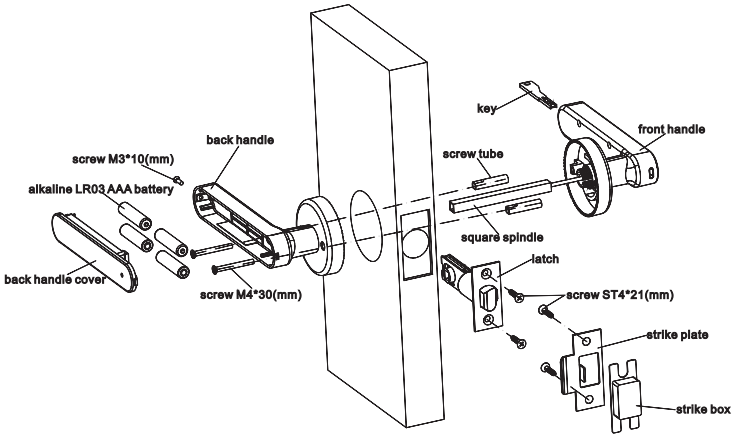

TIPS: 1.Install the spinddle into the latch, and get the cables through the middle of spindle.
2.Fix the rear fixing plate, front handle with two screws on the door.

Accessory

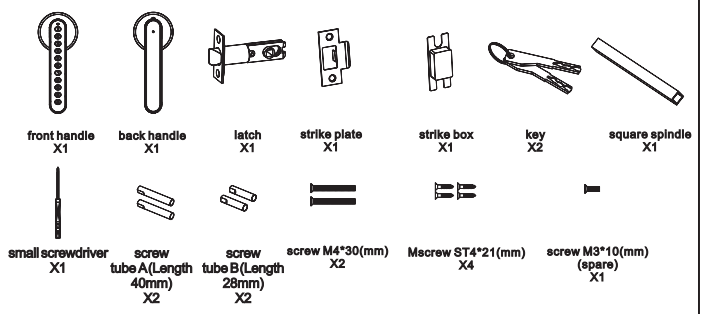

Open the product package. Check that the following accessories are included

Measuring door dimensions

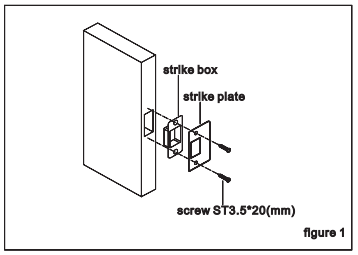

figure 1

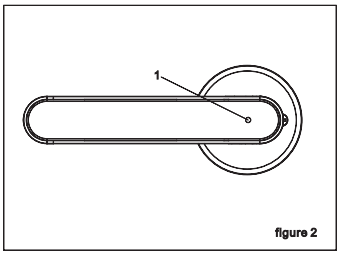

figure 2

(1)As Figure 1:
Fix the strike plate with 2 screws on the door frame.

(2)As Figure 2:
"Reset" button.(Press and hold for 5 seconds)

1.Measure the Door Size

Make sure door thickness is 30mm-50mm, door hole diameter is Φ54mm, measure backset size is 60/70mm with the deadbolt.

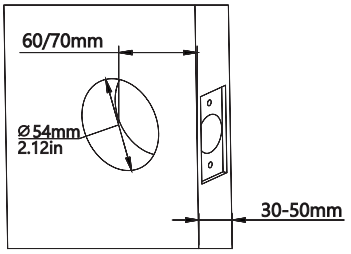

TIPS: 1.Available door thickness 30mm-50mm. If the door is over this range. Please contact us for more information.
2.Please select the correct accessories according to your door thickness.

Door opening direction

2.Door Opening Direction

(1)Right handle opening

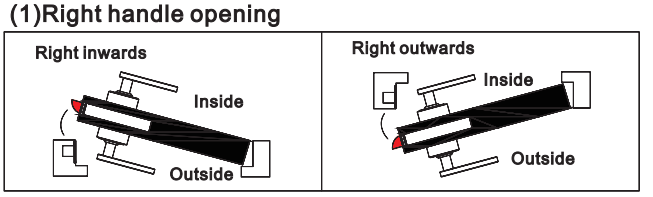

(2)Left handle opening

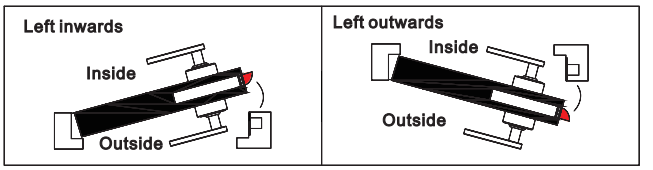

2.1Adjusting handle

Adjust the direction of the handle according to the opening direction of the door. If necessary, adjust as shown in the figure Figure 1; Turn the handle 180 degrees.

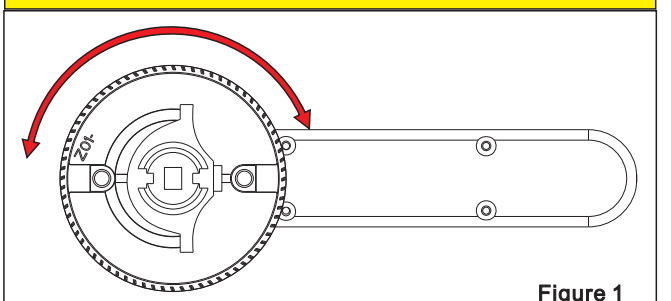

Figure 1

Door opening direction

3.Installation

Please follow the below steps to install the lock

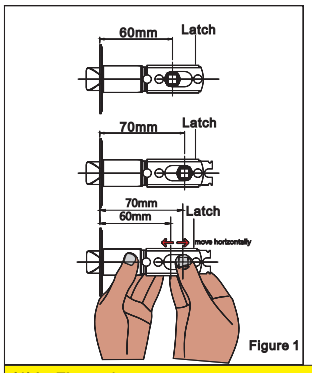

Figure 1

The correct way to install the square holes on the lock lever

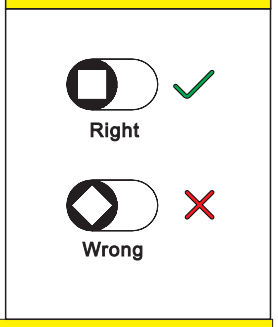

(1)As Figure 1:
Adjust the back distance of the lock body as required(60 or 70mm).When adjusting the back distance, hold the square hole on the lock lever with your hand and push it to the edge of the lock lever, front and rear the hole must be horizontal.

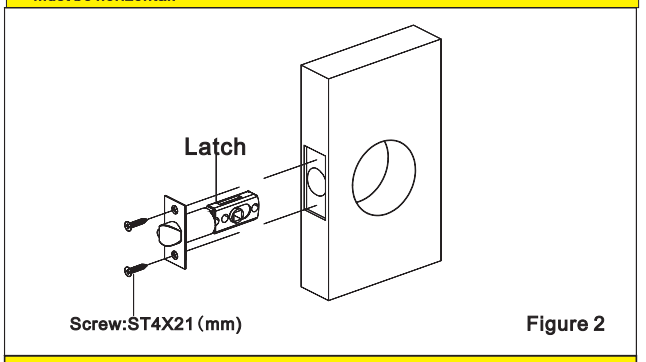

Figure 2

(2)As Figure2:
Fix the latch with 2 screws.

Door lock installation tutorial

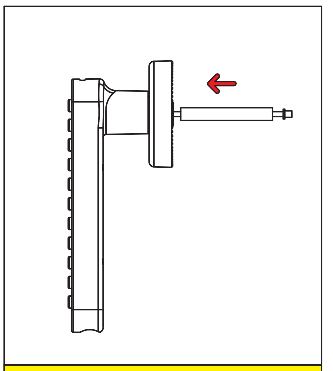

4.Put the front handle wire through the middle of the 100 square cylinder;

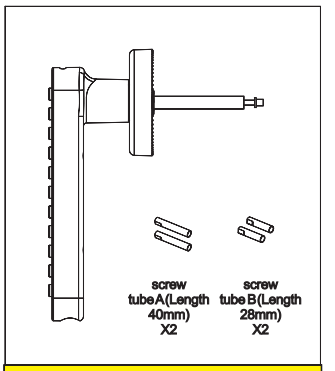

1.Door thickness 41-50mm with screw tube A
2.Door thickness 30-40mm with screw tube B

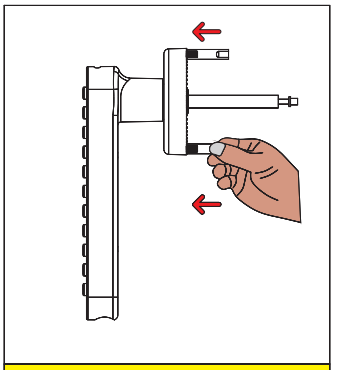

5.Screw the stud into the front hand full tooth screw and tighten it with pliers;

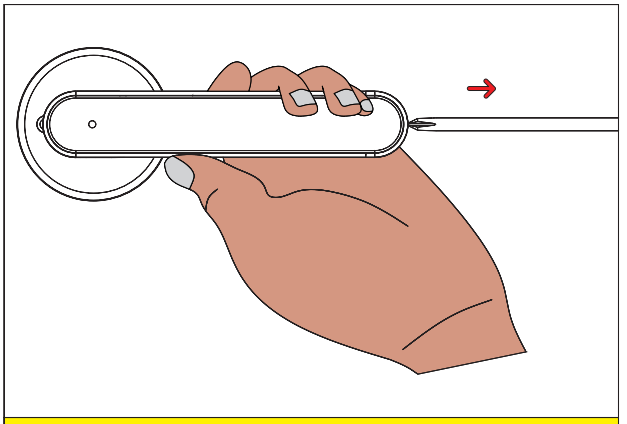

6.Use a screwdriver to remove the screws on the rear handle cover.

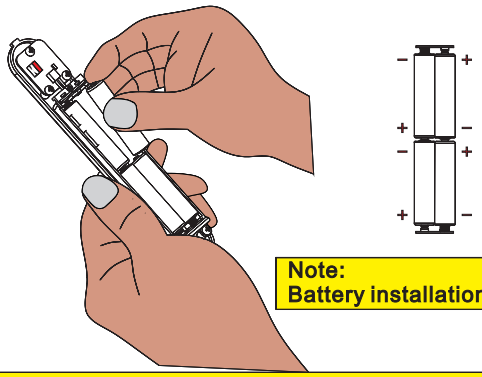

7.Put four alkaline LR03 AAA batteries into the battery compartment;

Latch installation direction(inside open)

Latch installation direction(outside open)

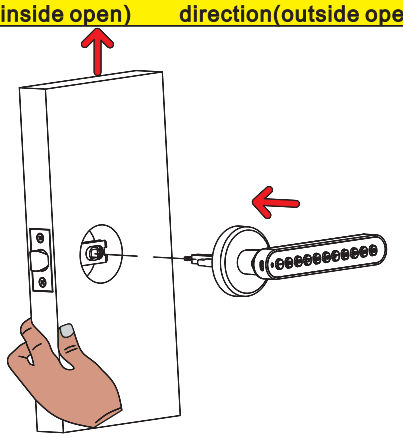

8.Aligh the front handle with the door hole and pass through the lock hole;

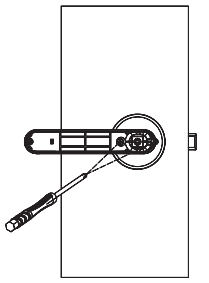

9.Fasten the front and rear handle connections with screws and tighten the screws;

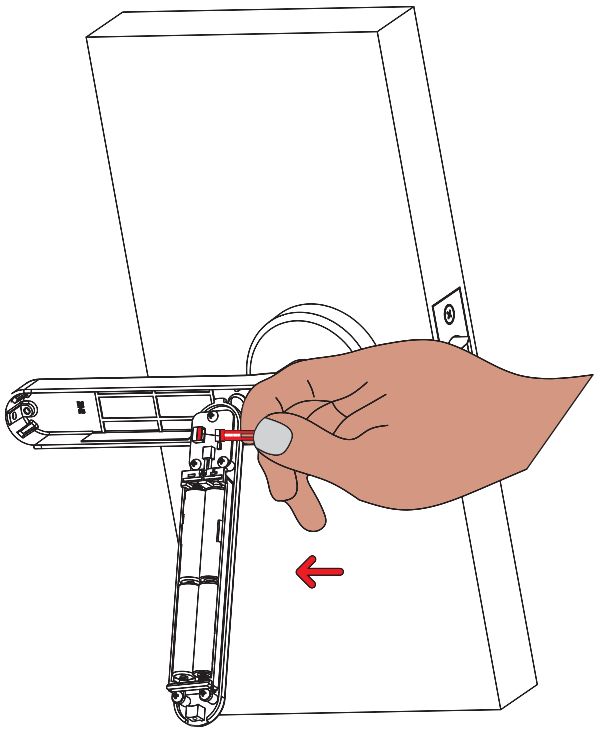

10.Insert the wire terminal into the circuit board slot;

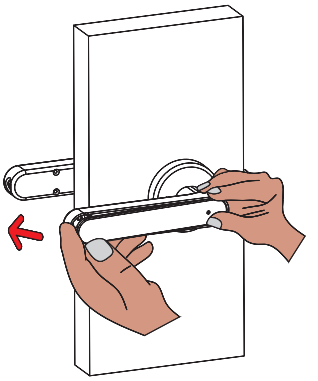

11.Put the handle cover into the back handle;

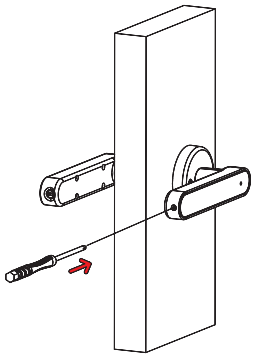

12.Tighten the screws securing the rear handle cover.

Tips and parameters

Check Points After Installation ⚠

(1)The smart lock is horizontal with the door.
(2)The latch bolt must works smoothly and flexibly!
(3)Please make sure the cable will not be pressed.
(4)Fix the handle with two screws, and check if it works fine.
(5)Please choose a good quality Lr03 alkaline battery,and ensure that all 4 batteries are new, and cover the battery cover.

TIPS: ⚠

1.This lock is equipped with mechanical keys for manual unlocking. Remove mechanical keys from the package and keep them in a safe place and always have access to them.

2.Please replace the batteries as soon as you heard the low voltage alarm, Don't mix old and new batteries or different battery types.

3.This lock is not designed to be exposed to direct sunlight or rain. It is not water proof IP rated.

4.Keep your fingers clean when using this lock.

Parameters

Unlocking Methods	Bluetooth/Passcode/Mechancal Key
Direction of Door Opening	Left/Right(Universal)
Power Supply	4*LR03 AAA Batteries/External USB Power Supply (for Emergency)
Number of Users	Passcode: max. 100
The number of virtual passwords	≤26
Emergency power supply	5V(DC)
Low voltage alarm	4.8V±0.2V(When the battery is low,the red light prompts five times)
Operating temperature	-25℃-65℃

Operation Instructions of Tuya APP

Brief Introduction and Download of Tuya APP

"Tuya Smart APP is the smart device management APP provided by Tuya to end consumers, through which you can conveniently configure and control your purchased whole-house intellectual products, configure your favorite scenarios and automation programs, share your smart devices with your family and friends, and enjoy the fun of a smart home.

Download APP: Search "Tuya Smart" in mobile application market or "App Store" or scan the following QR code to download.

This document takes Smart Life APP as an example and explains Tuya APP & Door Lock Panel Function in detail.

1.Registratoin and Login

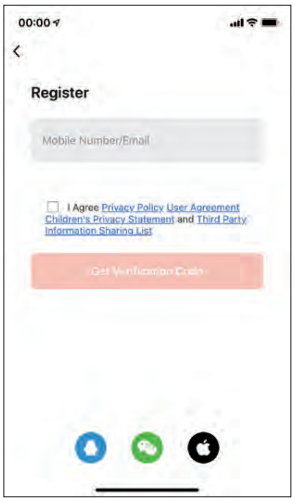

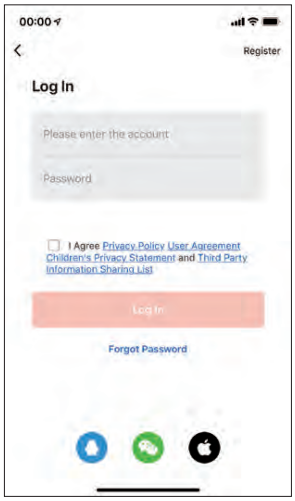

APP Registration: If you don't have an APP account, you can either register an account or log in via SMS authentication code.
Click "Create a New Account" to enter the account registration page. Follow the instructions to get the SMS authentication code and set the password.

If you already have an account, you can click "Login with Existing Account", which supports password, authentication code or social account login.

II. Append Bluetooth Door Lock (Bluetooth on cell phone must be on)

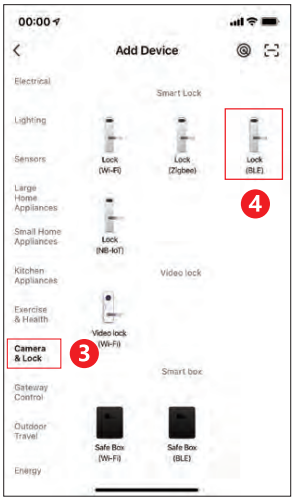

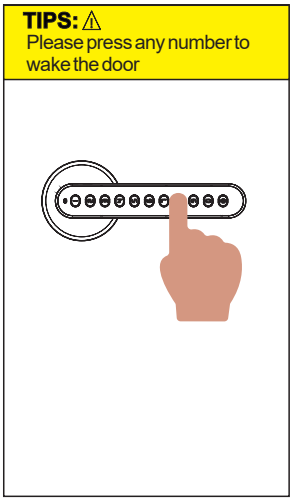

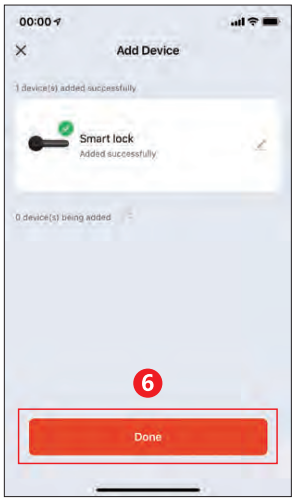

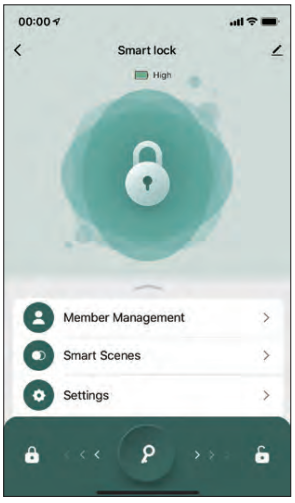

1. Click the "Add Device" icon on the APP homepage.
2. Press the digital keyboard to wake up the device. Wait for the mobile phone to scan the device and click "Next" to complete the device added.

III. Bluetooth Door Lock Panel- Home Page

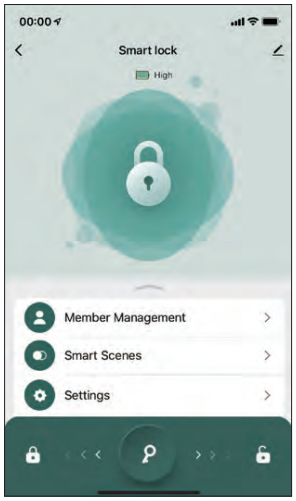

1. The lower side of the homepage contains, "opening records and equipment alerts", "temporary password", "member management", "intelligent application", "setting", the display door lock name and current power condition on the upper side of the homepage.

2. In the center of the homepage, the connection status of the Bluetooth will be displayed. If it is connected, you can unlock the right → slide "and turn on the door lock directly. Slide "Guan Lock" to the left. (Please make sure that the mobile phone Bluetooth has been opened, and the mobile phone and the door lock are recommended within 5-10 meters within a reasonable distance.) If the Bluetooth is not connected, it shows "cannot connect to Bluetooth" and cannot open the Bluetooth door lock directly through the APP. Essence

IV. Administrator password management

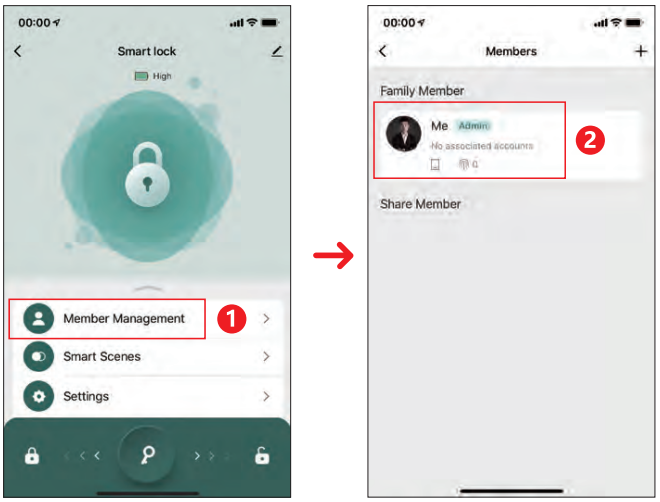

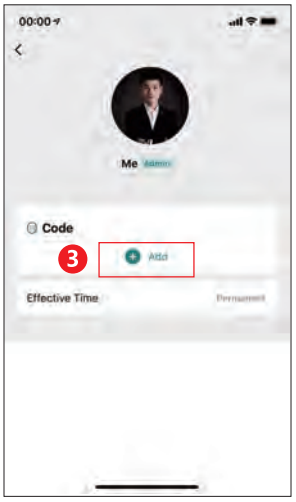

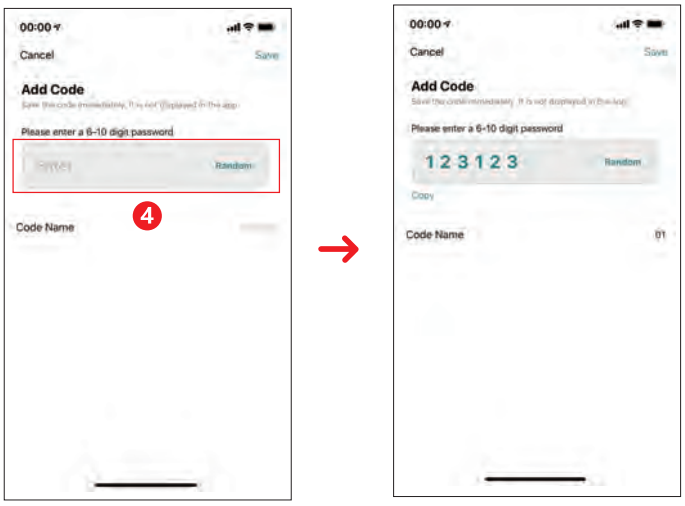

1. Homepage "Member Management" Entrance → Select "Family Member Account" with corresponding permissions: The affiliate administrator will have administrators permissions, and ordinary members are just ordinary user permissions;

2. Click "Password Add" to enter 6-10-digit passwords;

V. Member Management - Adding Administrators

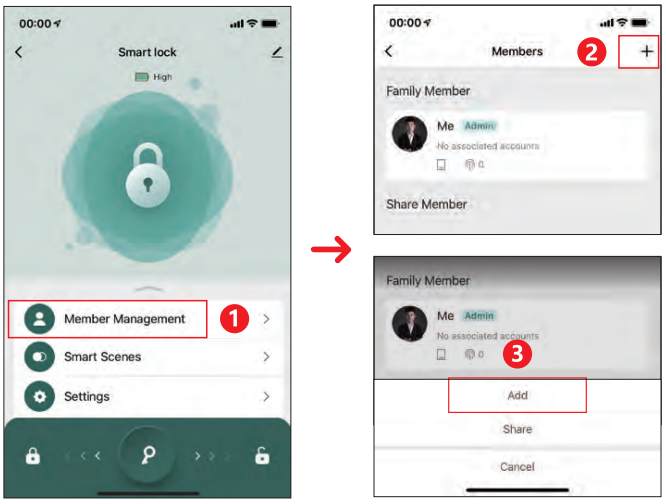

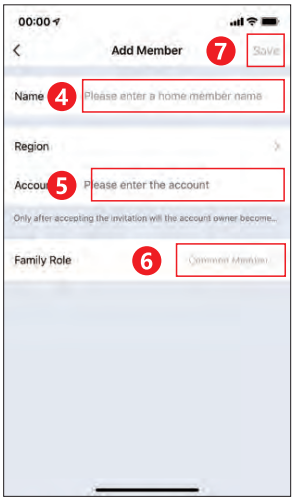

1. "Member Management" entrance click "+" in the upper right corner, select "Add Member", enter the member name and graffiti account, select the permissions and click to save it to add the administrator user; (add the administrator account number must have already already already been already Register the smart account of graffiti, otherwise it will not be added)

2. After the additional account opens the mobile phone graffiti APP, the invitation information will be received.

3. All key information added to this account entrance will default to the authority of the administrator;

VI. Member Management - Adding Ordinary Members

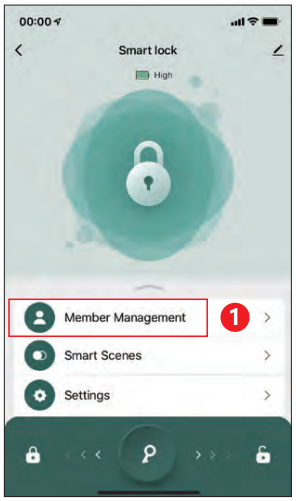

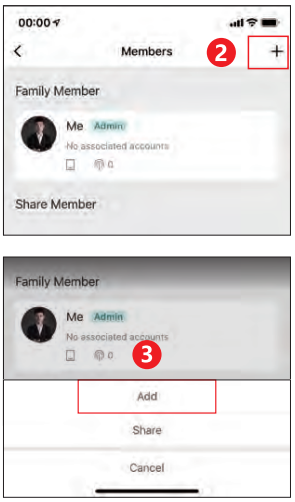

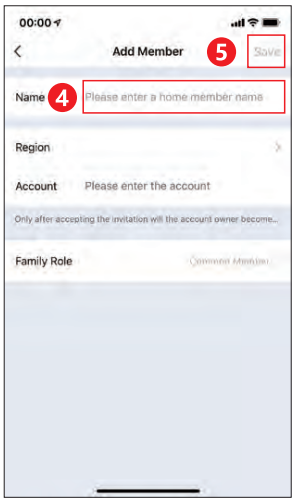

1. "Member Management" entrance click "+" in the upper right corner, select "Add Member", enter the member name, no need to enter the account, click to save, you can add ordinary member users.

2. All key information added to this account entrance will be defined as ordinary user permissions;

VII. Deletion of Family Members

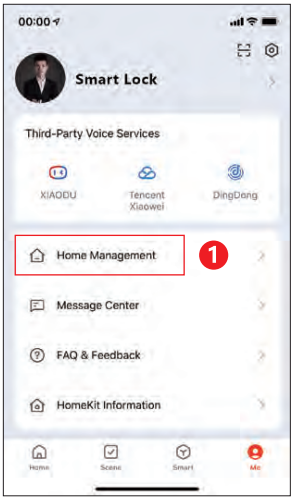

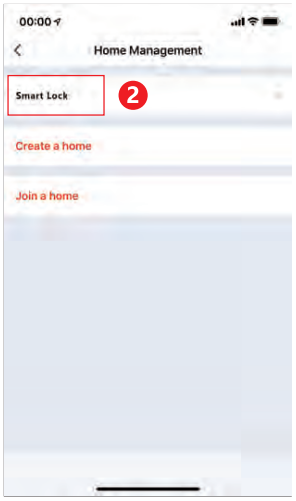

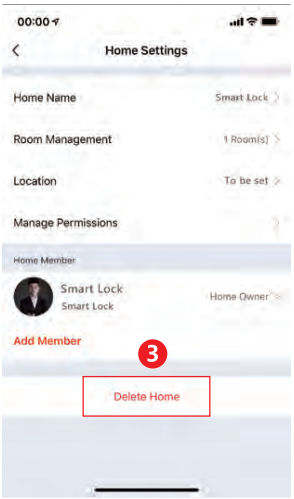

1. Click your "Family Management" at the bottom right corner of the App, select "Family", you can delete the added family members or change the permission to use the app;

VIII. Door Opening Records and Device Alarms

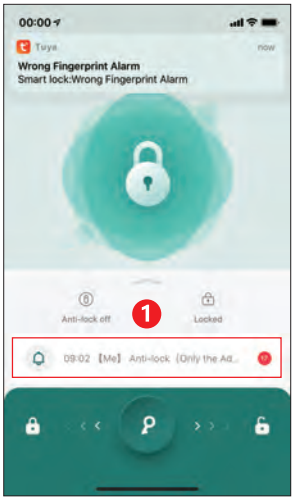

1. Click the "Alarm" icon to view the door opening record and trial and error alarms and other information;

Note: When the door lock is connected to the cell phone Bluetooth, the door opening records and alarms will be displayed on the APP in real time, otherwise, the records will be cached in the door lock local file, awaiting transmission when the door lock is connected to the cell phone Bluetooth and opened in the next time.

IX. Restore Factory Settings

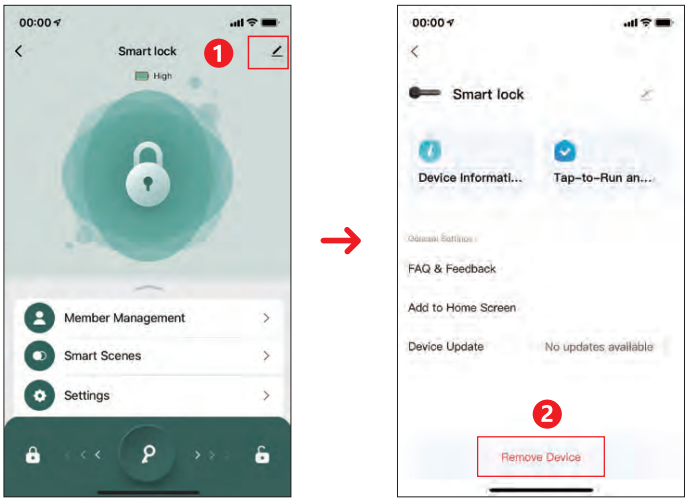

Click the icon in the upper right corner, find the "Remove Equipment" after entering the interface, select "Unbutton and Clear Data"

1. When the mobile APP and the door lock are in a Bluetooth connection state, use the "Remove Device" to set the operation. All the door locks of the door lock will be deleted, and the door locks are restored to the default state when they first leave the factory. Other users can re -add the door lock through the app.

2. When the mobile phone does not perform the Bluetooth connection status with the door lock, the door lock is restored to the factory setting operation at the mobile app, and the door lock on the door lock is still not affected. Other users can re -match the door locks through the APP to match the door lock on the back door lock. The original unlocking data will be invalid.

3. You can restore the factory settings through the local mechanical button of the door lock; long press the settings key for 5 seconds, all the door locks will be deleted, the door lock is restored to the default state when the factory is just left. Other users can re -add the door through the app to re -add the door. Lock.

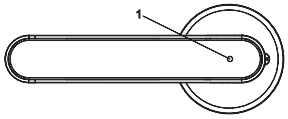

Note: When the door lock is not activated, the experience password "123456" can be used to experience the unlocking.

Version:TY-Z01-24.05-V2.0

This device complies with part 15 of the FCC Rules. Operation is subject to the following two conditions: (1) This device may not cause harmful interference, and (2) this device must accept any interference received, including interference that may cause undesired operation.

Any Changes or modifications not expressly approved by the party responsible for compliance could void the user's authority to operate the equipment.

Note: This equipment has been tested and found to comply with the limits for a Class B digital device, pursuant to part 15 of the FCC Rules. These limits are designed to provide reasonable protection against harmful interference in a residential installation. This equipment generates uses and can radiate radio frequency energy and, if not installed and used in accordance with the instructions, may cause harmful interference to radio communications. However, there is no guarantee that interference will not occur in a particular installation. If this equipment does cause harmful interference to radio or television reception, which can be determined by turning the equipment off and on, the user is encouraged to try to correct the interference by one or more of the following measures:

-Reorient or relocate the receiving antenna.

-Increase the separation between the equipment and receiver.

-Connect the equipment into an outlet on a circuit different from that to which the receiver is connected.

-Consult the dealer or an experienced radio/TV technician for help.

FCC Radiation Exposure statement

The device has been evaluatec to meel general RF exposure requirement. The device can be used in porlable exposure condition without restriction.