A30 说明书

75.00 mm

110.00 mm

TELESIN

Wireless Lavalier Microphone
无线纽扣麦克风

USER MANUAL / 用户手册

产品概述

感谢您购买本产品；
本产品为无线麦克风，可提供专业级别的录音输出。
即插即用，无需 APP, 多种用途：可实现网络直播、视频 Vlog 拍摄、节目访谈、采访录音、视频教学等场合使用。

包装清单

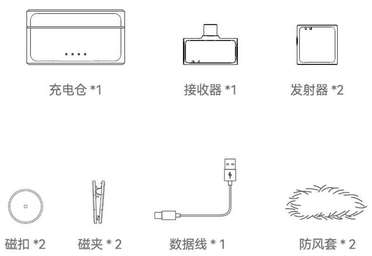

产品图示

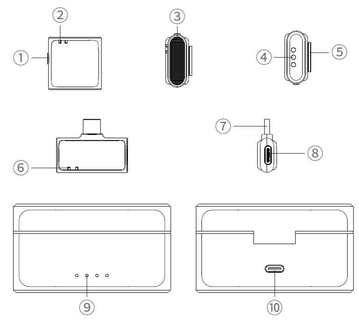

①功能按键　②发射器指示灯
③麦克风　④ 充电触点
⑤磁扣　⑥接收器指示灯
⑦与手机通信接口　⑧外置充电口 (给手机充电)
⑨充电仓电量指示灯　⑩充电仓充电口

使用说明

第一步 : 把接收器的一头接入手机接口

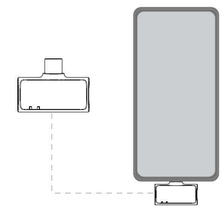

注：OPPO/VIVO/1Q00/Realme 品牌的手机要到设置里面（搜索 "OTG"- 打开 OTG 供电) 才能正常使用

第二步：长按 3S 开机键，连接指示灯闪烁即开机成功

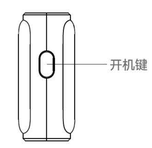

使用说明

第三步 : 发射器连接指示灯常亮 , 手机打开相关直播视频 APP 即可使用麦克风收音

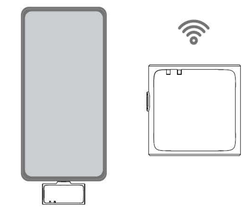

特别说明：
手机电量不足的情况下可直接通过接收器的充电接口给手机充电

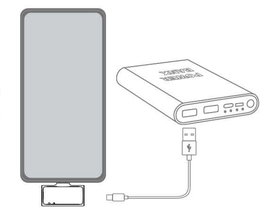

使用说明

采样率	48KHz 24bit
频率响应	20Hz-20KHz
声道模式	立体声
传输距离	视距 200 米
传输方式	蓝牙
降噪	一键降噪
声音延时	≤24ms
信噪比	≥70dB
MIC 灵敏度	-36±2dB
MIC 指向性	全指向性
MIC 声压级	≥110 dBSPL
电池	发射器：65mAh 充电仓：300mAh
充电时长	发射器：约 1.5 小时 充电仓：约 1.5 小时
输入电流	发射器：5V/1A　充电仓：5V/1A
尺寸 / 重量	接收器 : 33.95*25.4*9.2mm/4.82g 发射器 : 25.7*25*12.6mm/8.85g 充电仓 : 75*42*35.6mm/43.12g

UI 功能

发射器

功能 / 状态	操作说明	指示灯
开机	长按 ON_OFF 键 3S/ 出仓自动开机	蓝绿灯交替闪烁
关机	长按 ON-OFF 键 3S/ 入仓自动关机	所有灯灭
未连接	等待连接 , 3 分钟未连接成功自动关机	蓝绿灯交替闪烁
已连接	自动连接	绿灯常亮，蓝灯常灭
降噪	单击 ON_OFF 键 , 开启 / 关闭降噪功能	开启 : 绿灯常亮，蓝灯常亮 关闭 : 绿灯常亮 , 蓝灯常灭
静音	双击 ON_OFF 键 , 开启 / 关闭 MIC 静音功能	开启 : 绿灯快速闪烁 关闭 : 绿灯常亮
充电		蓝灯呼吸 , 充满长亮
低电		蓝灯每隔 10S 快闪灯 2s（5 次极快闪烁)
配对	出厂默认配对状态，如需重新配对长按 ON_OFF 按键 8 秒后恢复出厂设置重新进入配对状态	蓝绿灯交替闪烁
声道切换	RX 开机默认单声道 , 三击任意 TX 的 ON_OFF 键，RX 切换至立体声模式，再次三击任意 TX 的 ON_OFF 键 ,RX 切换至单声道模式	立体声 : 基于当前 TX 灯显状态闪烁 2 次后恢复当前状态 单声道 : 基于当前 TX 灯显状态闪烁 1 次后恢复当前状态

充电仓

给仓充电	LED 跑马灯效果 , 充满后常亮
电量显示	充电仓开盖后指示灯显示当前电量 , 四颗灯分别指示 25%/50%/75%/100%

UI 功能

接收器

功能 / 状态	操作说明	指示灯
开机	插入手机端口上电开机	两个绿灯快速闪烁
关机	拔出手机端口断电	
配对	关机开机后自动进入配对状态	两个绿灯快速闪烁
未连接	持续工作，不关机	两个绿灯快速闪烁
已连接	自动连接 (一个绿灯对应一个 TX 的连接状态)	绿灯常亮
外放	四击 TX 的 ON_OFF 按键开启和关闭外放功能	绿灯呼吸

注：
出厂默认配对 , 默认音量最大 , 默认关降噪 (不做记忆) , 默认单声道 , 默认开外放 (不做记忆)

注意事项

1. 本产品为精密电子设备 , 应避免进水或重摔 ; 如不慎进水 , 请关机并甩干水分 , 及时交由专业技术人员处理。
2. 长时间不使用时 , 应每三个月给电池充满一次电量 , 以保持电池的性能。
3. 机内电池不得暴露在日照、火烤或类似过热环境中。
4. 为了避免产生信号断点 , 尽量保持发射器和接收器面对面使用。

免责声明

请仔细阅读本声明，一旦使用本产品，即视为对本声明的全部认可和接受。每次使用前，请仔细检查产品，若出现破损、变形，请勿使用。使用本产品，就意味着您认可并同意，您将对使用本产品的行为和可能产生的后果负全部责任。您承诺仅会出于正当合法的目的使用本产品。您理解并同意，对于直接或间接因使用本产品而造成的滥用、不利影响、损害、伤害、惩罚或者其他法律后果，泰迅数码有限公司（以下简称“Telesin”）将不承担任何责任。用户应遵循包括但不限于本文提及的使用注意事项。在国家法律法规范围内，本承诺解释权、修改权归 Telesin 所有。
泰迅保修期从您收到货物后的当日起计算，享有 6 个月保修服务。

Product Overview

Thank you for purchasing this product.
This product is a wireless microphone that provides professional grade recording output. Plug and play, no APP required, multiple uses: can be realized for webcasting, video vlog shooting, program interviews, interview recording, video teaching and other occasions.

Packing List

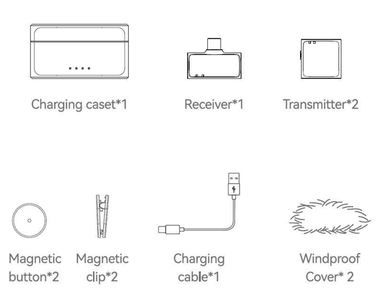

Product Illustration

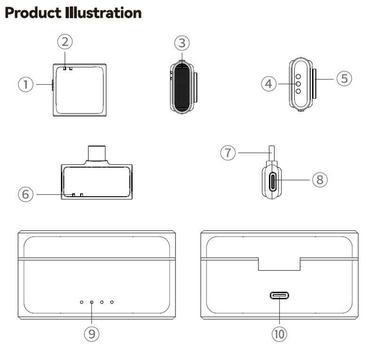

① Function buttons
② Transmitter Indicator lamp
③ Microphone
④ Charging contact
⑤ Magnetic clasp
⑥ Receiver indicator
⑦ Communication interface with cell phone
⑧ External charging port (for cell phone charging)
⑨ Charging compartment power indicator
⑩ Charging port of the charging compartment

Instructions for use

Step 1: Connect one end of the receiver to the cell phone port.

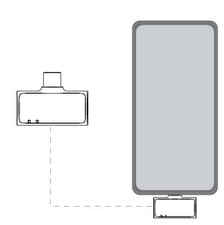

Note:
OPPO/VIVO/1Q00/Realme brand cell phones should go to the settings (search for "OTG" - open the OTG power supply) to be able to use normally!

Step 2: Long press the 3S power on button, the connection indicator light flashes that the power on is successful.

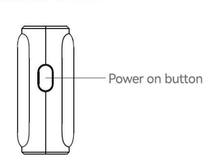

Instructions for use

Step 3: The transmitter connection indicator light is always on, the phone open the relevant live video APP can use the microphone radio.

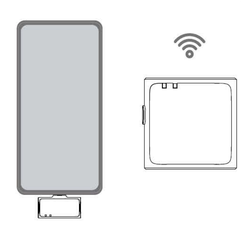

Special instructions:
In case of insufficient cell phone power, you can charge your cell phone directly through the charging port of the receiver.

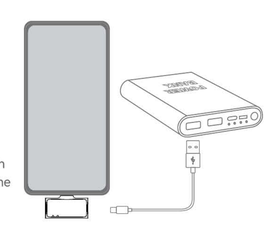

Instructions for use

Sample Rate	48KHz 24bit
Frequency Response	20Hz-20KHz
Channel Mode	Stereo
Transmission Distance	Sight distance 200 m
Transmission Method	Bluetooth
Noise Reduction	One-touch noise reduction
Sound Delay	≤24ms
Signal-to-noise ratio	≥70dB
MIC Sensitivity	-36±2dB
MIC Directivity	Omnidirectional
MIC sound pressure	≥110 dBSPL
Battery	Transmitter: 65mAh Charging case: 300mAh
Charging time	Transmitter: ≈1.5 hours Charging case: ≈1.5 hours
Input Current	Transmitter: 5V/1A Charging case: 5V/1A
Size/Weight	Receiver: 33.95*25.4*9.2mm/ Transmitter: 25.7*25*12.6mm/ Charging case: 75*42*35.6mm/

UI Functions

Transmitters

Function/ Status	Operating Instructions	Indicator light
Power On	Long press ON_OFF button 3S/out of Charging case auto power on	Blue and green lights flash alternately
Shutdown	Long press ON_OFF button 3S/ Enter Charging case auto shutdown	All lights off
Not connected	Waiting for connection, automatic shutdown after 3 minutes of unsuccessful connection	Blue and green lightsflash alternately
Connected	automatic connection	Green light always on, blue light always off
Noise Reduction	Click ON_OFF button to turn on/off the noise reduction function	On: green light is always on, blue light is always on Off: green light is always on, blue light is always off
Mute	Double-click ON_OFF button to turn on/off the MIC mute function	On: Green light flashes rapidly Off: Green light always on
Charging		Breathing blue light,full of long-lasting light
Low Battery		Blue light blinks 2S every 10S (5 very fast blinks)
Pairing	Factory default pairing state, if you need to re-pairing long press the ON_OFF button for 8 seconds to restore the factory settings to re-enter the pairing state	Blue and green lights flash alternately
Channel Switching	RX power on default mono, triple -click any TX's ON_OFF key, RX switches to stereo mode, again triple-click any TX's ON_OFF key, RX switches to mono mode	Stereo: based on the current TX light display status blinks 2 times and then restores the current status Mono: restores current state after 1 flash based on current TX status.

UI Functions

Charging case

Charge the Charging case	LED running light effect, always on when full
Battery level	Charging compartment after opening the cover indicator light shows the current battery level, four lights indicate 25%/50% /75%/100% respectively

Refraction

Function/Status	Operating Instructions	Indicator light
Power On	Plug in cell phone port to power on	Two green lights blinking rapidly
Shutdown	Unplug the cell phone port to power off	
Pairing	Automatically enters pairing state after powering on	Two green lights blinking rapidly
Not connected	Continuous operation without shutting down	Two green lights blinking rapidly
Connected	Automatic connection (one areen light corresponds to the connection status of one TX)	Green light is always on
External	Quad-tap the TX's ON_OFF button to turn on and off the external playback function	Green light to breathe

Notes:
Factory default pairing, default volume up, default off noise reduction (nomemorization), default mono, default on external playback (no memorization)

Notes:

1. This product is a precision electronic equipment, should avoid water or heavyf all; if accidentally into the water, please turn off the machine and shake off the water, and promptly referred to professional and technical personnel to deal with.
2. When not in use for a long time, the battery should be fully charged every three months to maintain the performance of the battery.
3. The battery in the machine should not be exposed to sunlight, fire or similar overheating environment.
4. In order to avoid signal breaks, try to keep the transmitter and receiver facing each other.

Disclaimer

Please read this statement carefully and by using this product you will be deemed to have acknowledged and accepted it in full. Please check the product carefully before each use and do not use it if damaged or deformed. By using this product, you acknowledge and agree that you are fully responsible for your actions and the possible consequences of using this product.You undertake to use this product only for legitimate and lawful purposes. You understand and agree that ("Telesin") shall not be liable for any misuse, adverse effects, damages, injuries, penalties or other legal consequences arising directly or indirectly from the use of this product. The user should follow the precautions including but not limited to those mentioned herein. To the extent Telesin reserves the right to interpret and modify this commitment within the limits of national laws and regulations.
The warranty period for TELESIN products begins 6 months on the day you receive the product.

FCC Caution

This device complies with part 15 of the FCC Rules. Operation is subject tthe following two conditions: (1) This device may not cause harmful interference, and (2) this device must accept any infterference received, including interference that may cause undesired operation.

Any Changes or modifications not expressly approved by the partyresponsible for compliance could void the user's authority to operate the equipment.

Note: This equipment has been tested and found to comply with the limitsfor a Class B digital device, pursuant to part 15 of the FCC Rules. These limits are designed to provide reasonable protection againarmful interference in a residential installation. This equipment generates uses and can radiate radio frequency energy and, if not installed and used in accordance with the instructions, may cause harmful interference to radio communications. Howvever, there is no guarantee that interference will not occur in a particular installation. If this equipment does cause harnnful interference to radio or television reception, which can be determined by turning the equipment off and on, the user is encouraged to try to correct the interference by one or more of the following measures:
-Reorient or relocate the receiving antenna.
-Increase the separation between the equipment and receiver.
-Connect the equipment into an outlet on a circuit differentt from that to which the receiver is connected.
-Consult the dealer or an experienced radio/TV technician for help.

The device has been evaluated to meet general RF exposure requirement. The device can be used in portable exposure condition without restriction.

www.telesin.com