ALTA LABS

QUICK START GUIDE

MODEL: AP6

Before You Begin

Download the Alta app on your mobile device, and create your free Alta account.

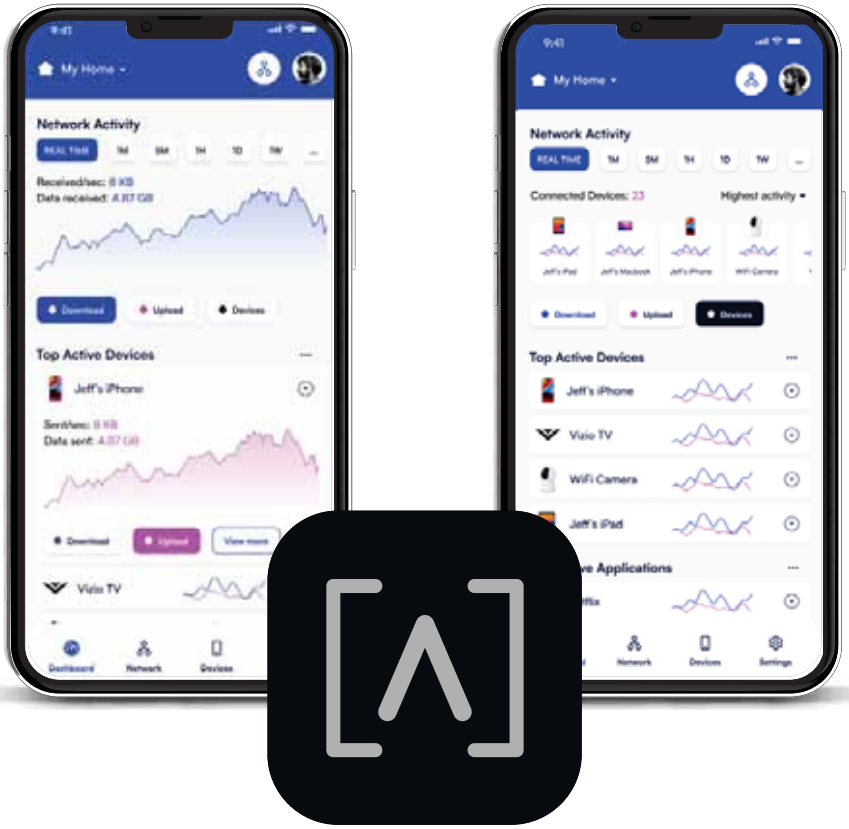

You may also visit **manage.alta.inc** to manage your Alta devices.

manage.alta.inc

Package Contents

AP6

Mounting Plate

Ceiling Mount

Anchors
(Qty. 2)

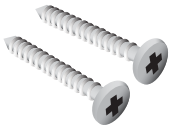

Wall-Mount
Screws (Qty. 2)

Ceiling Tile
Screws (Qty. 2)

T-Bar Screws

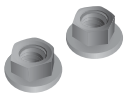

Nuts

Rubber Feet

Installation Requirements

- CAT 5/6 Ethernet Cabling
- 48V PoE+ Switch or PoE Injector
- Phillips Screwdriver
- Drill and drill bit for wall or ceiling mounting

Hardware Overview

Front

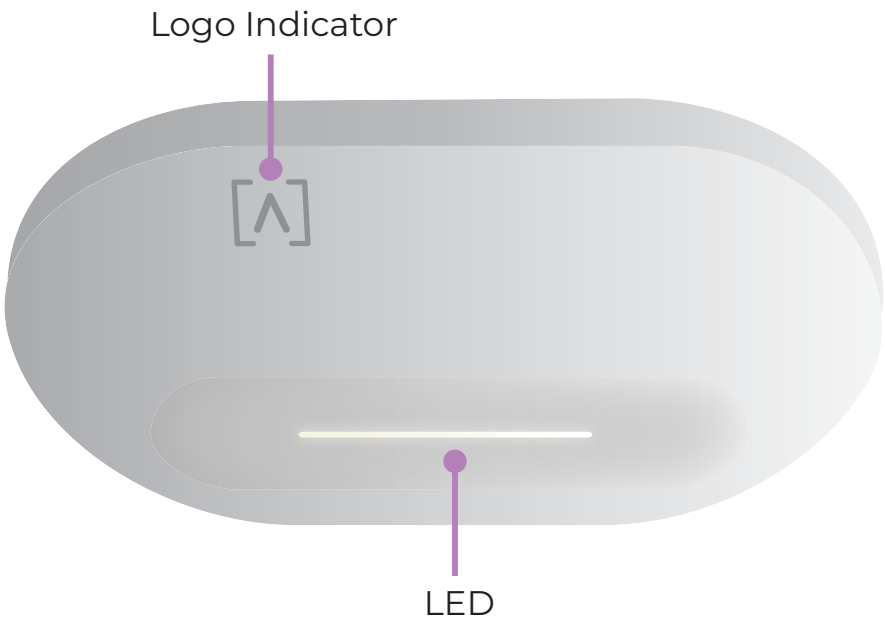

Logo Indicator If you need to remove the AP from the mount, use a flat blade screwdriver to disengage the Mounting Plate here.

LED Illuminates white by default when AP is online and functional. Can be changed to blue, white, or off in the Alta app or management interface. Flashes when booting.

Back

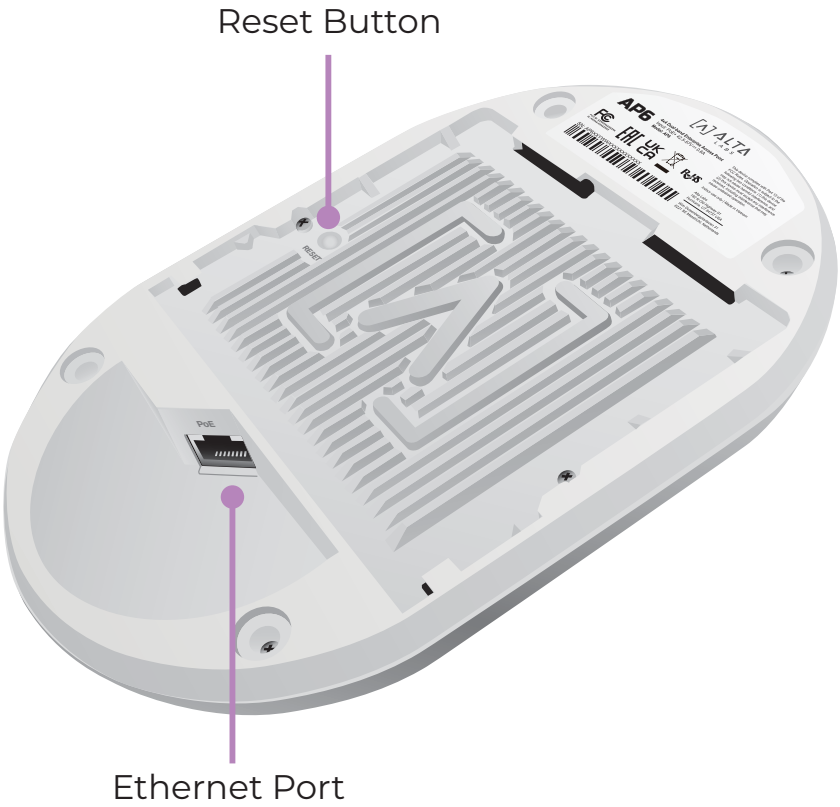

Reset Button Press down for 10 seconds until the LED begins flashing to reset the AP to factory defaults.

Ethernet Port Connects to an Ethernet cable from your PoE+ Switch. An optional 48V, 0.5A adapter can be purchased and used to power the AP.

Hardware Installation

Ceiling Tile Mount

1. Remove the appropriate ceiling tile.

2. Align the Mounting Plate in the desired location flat on the tile (typically centered). Mark the areas indicated below for the screws and the Ethernet cable.

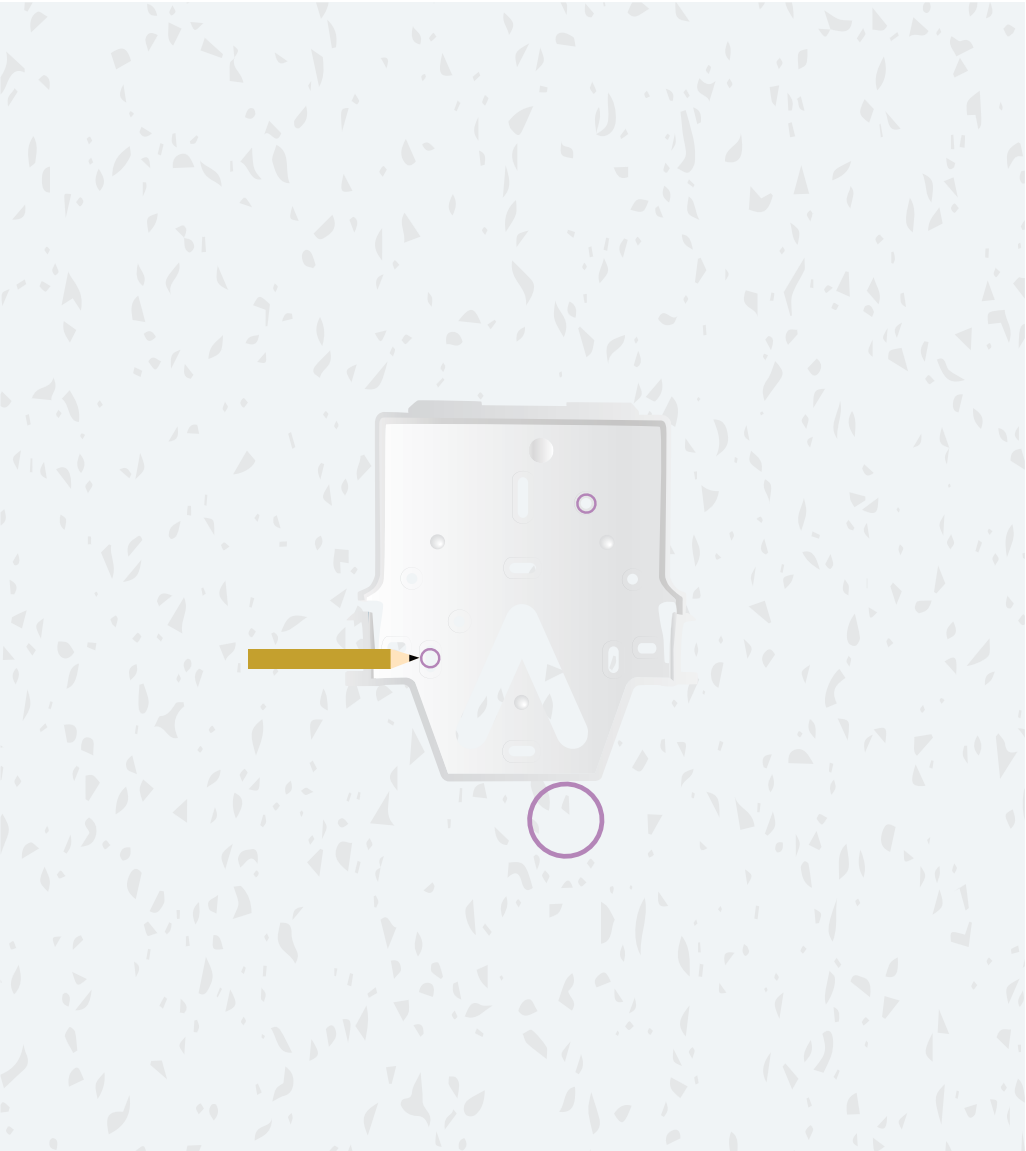

3. Secure the Mounting Plate to the Ceiling Mount with the ceiling tile between using the two Ceiling Tile Screws and the two Nuts.

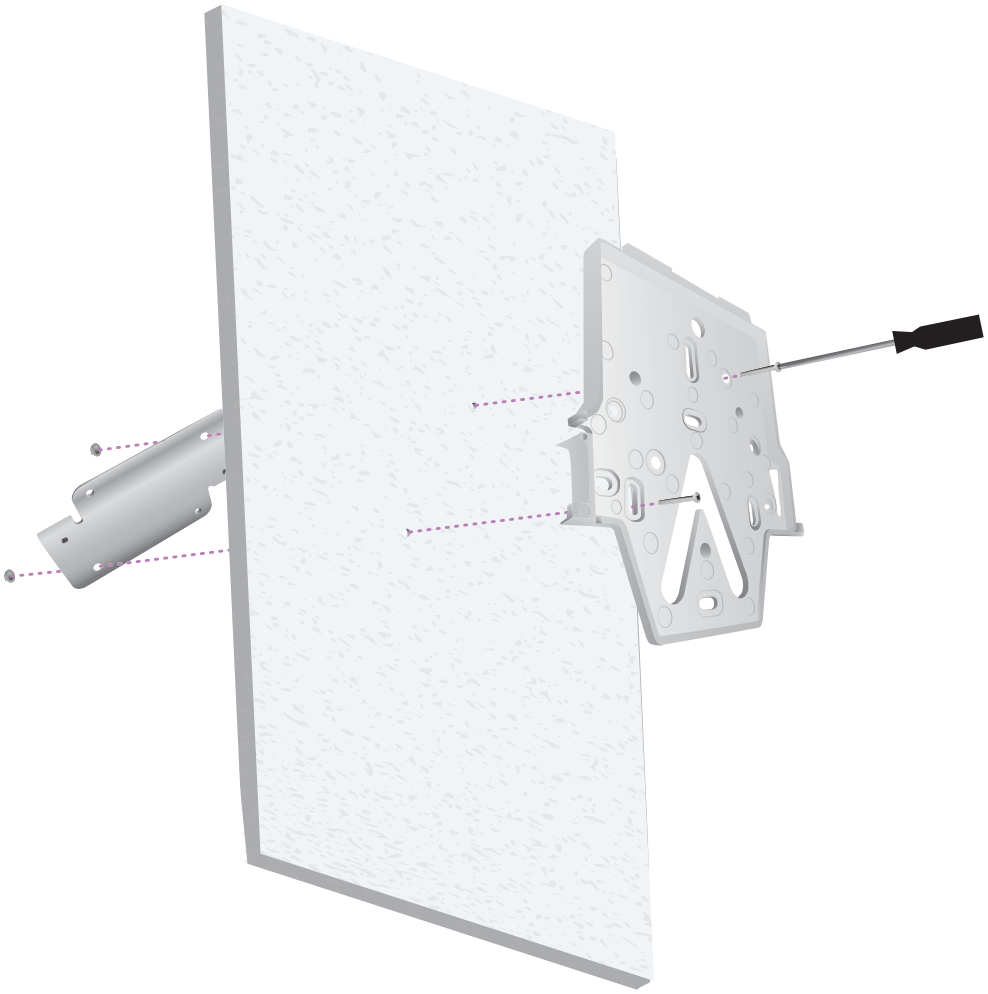

Assembled Top View

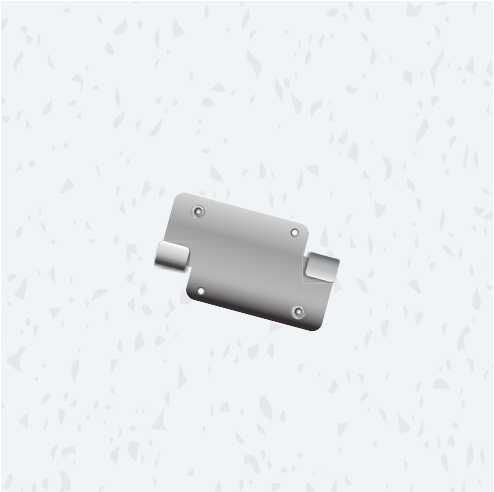

Assembled Bottom View

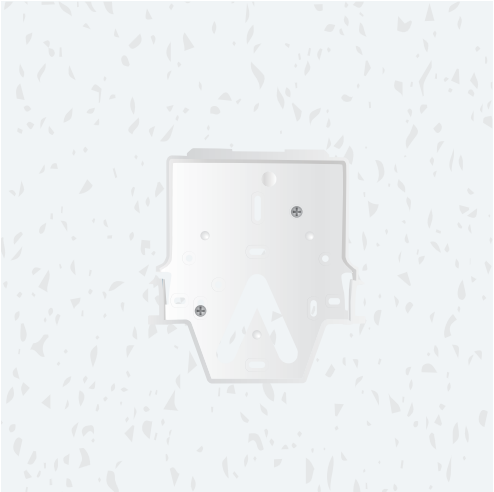

Proceed to “Connecting The AP” on page 13

Wall Mount

1. Position the Mounting Plate in the desired location and use a pencil to mark the holes.

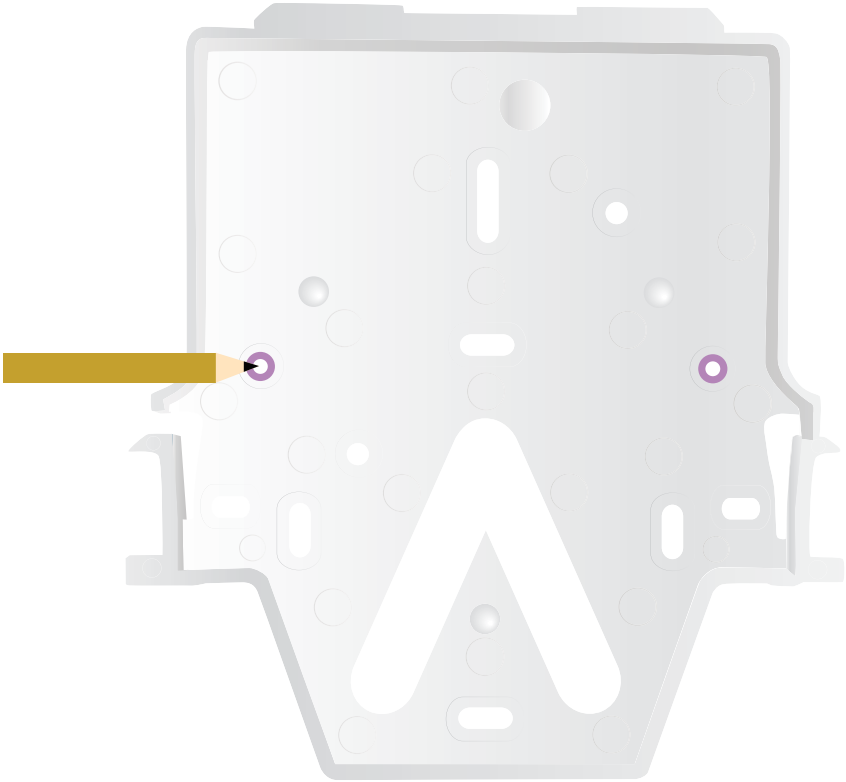

2. If running cabling along the wall, remove the notch on the AP.

3. Secure the Mounting Plate to the wall using the Wall-Mount Screws and a Phillips screwdriver.

   If mounting on drywall, use the anchors to ensure secure mounting. Use a 6 mm drill bit to drill the holes for the anchors and insert them in the wall.

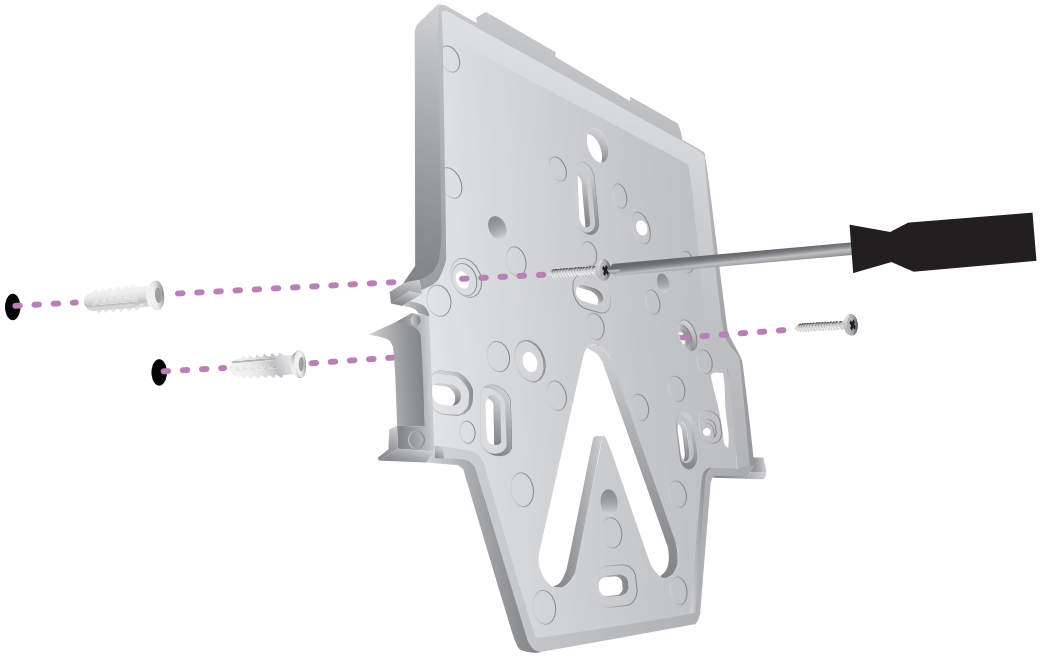

Note: Ensure the Wall-Mount Screws are flush with the Mounting Plate

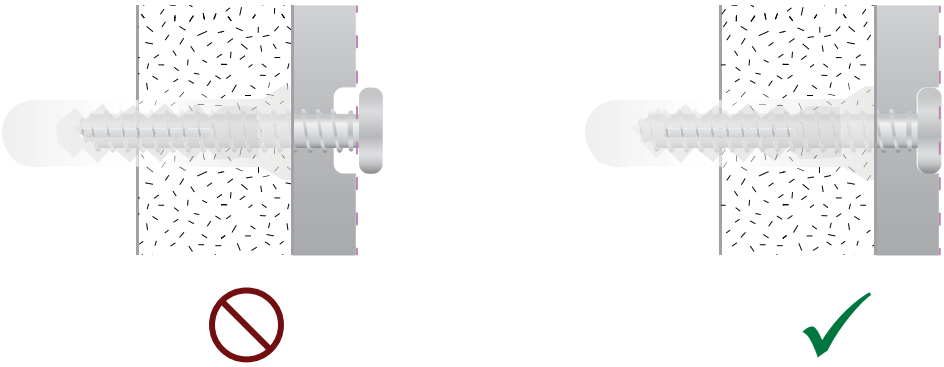

Proceed to “Connecting The AP” on page 13

T-Bar Ceiling TIle Mount

1. Use a small Phillips head screwdriver to loosen the two pre-installed screws on the Ceiling Mount to allow enough clearance for the T-Bar.

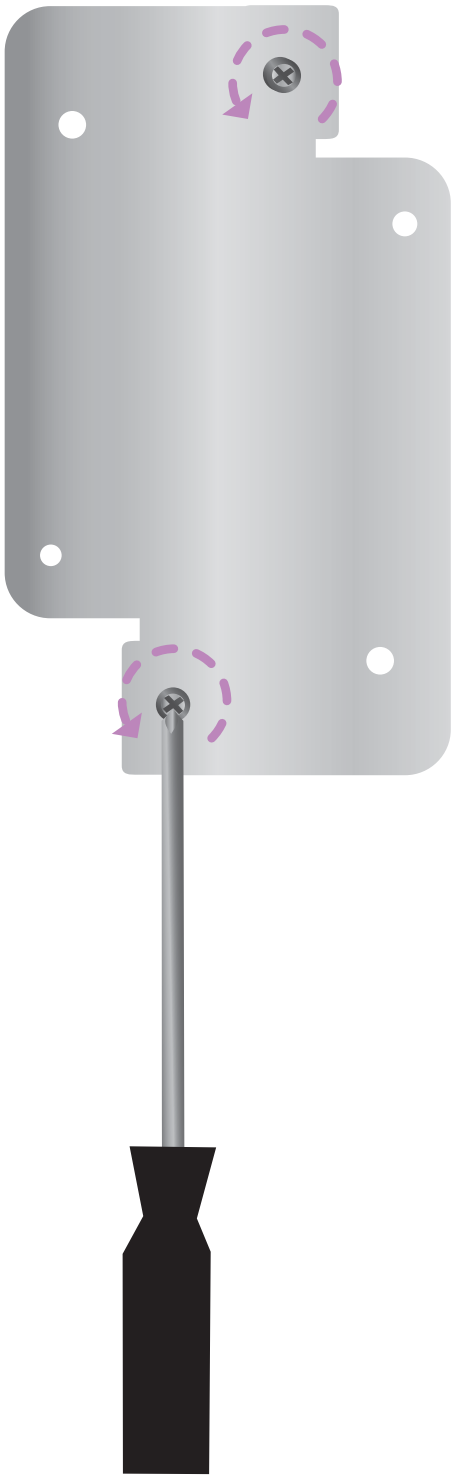

2. Rotate the Ceiling Mount around the T-Bar.

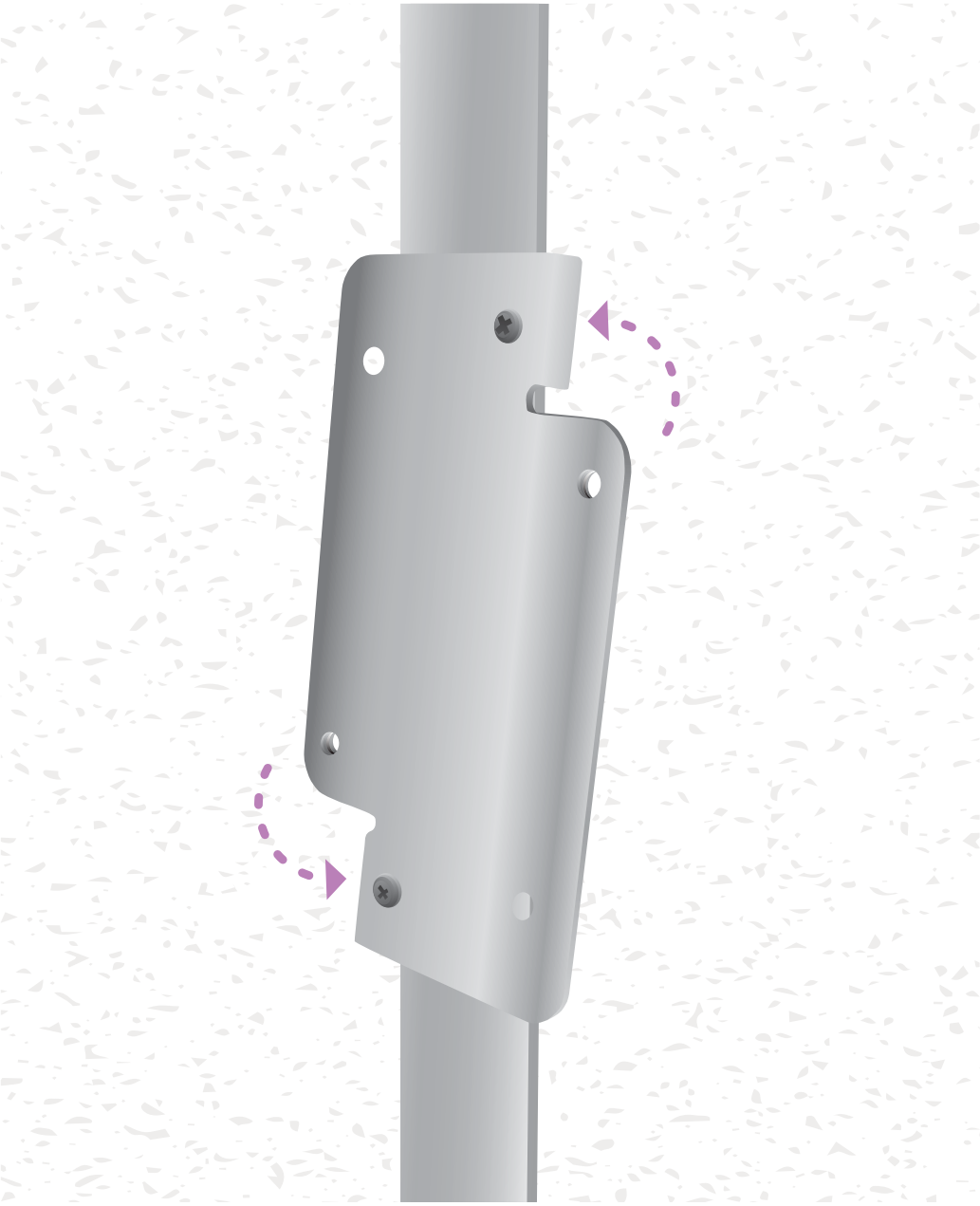

3. Tighten both screws using a Phillips screwdriver.

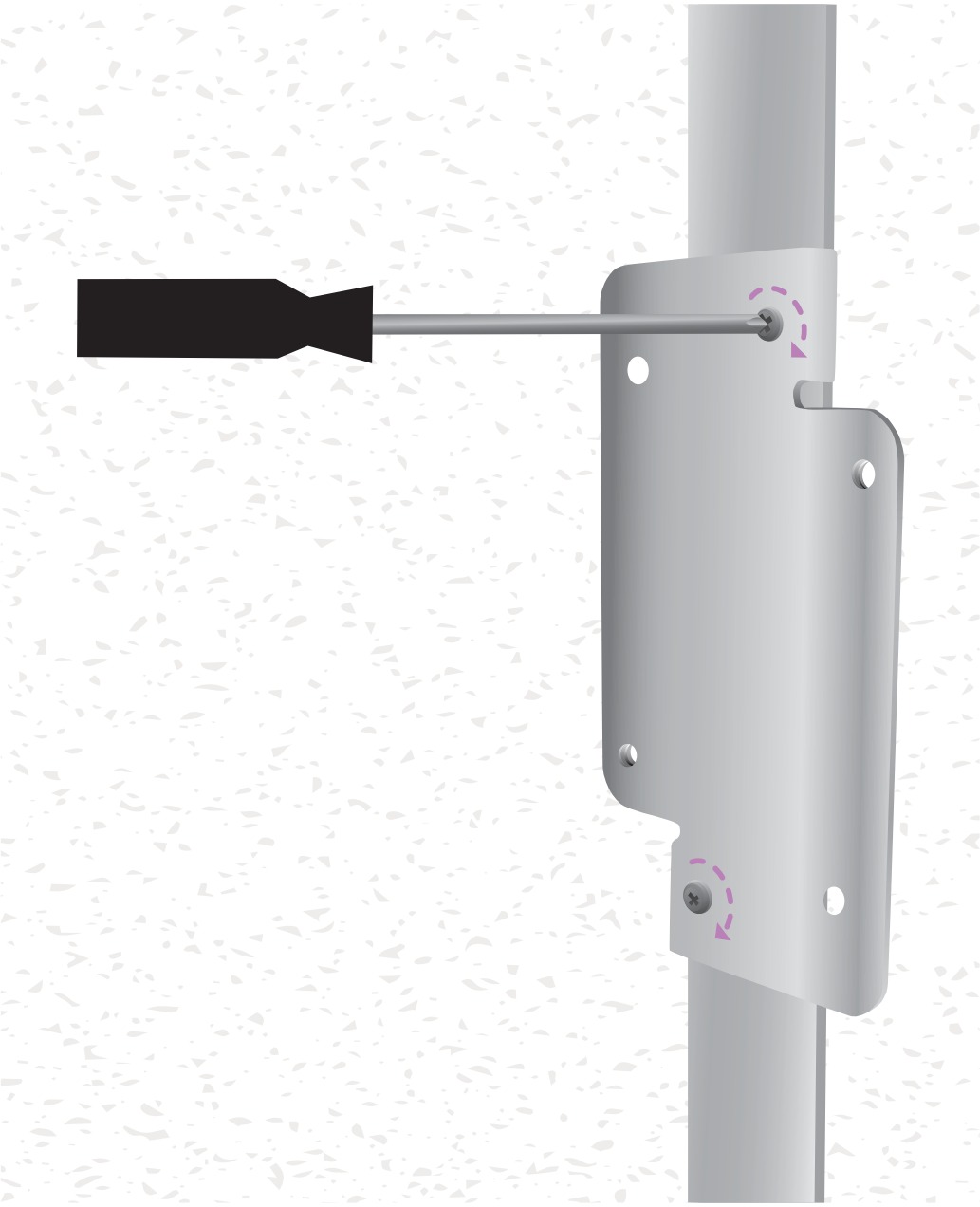

4. Connect the Mounting Plate to the Ceiling Mount with the T-Bar Screws.

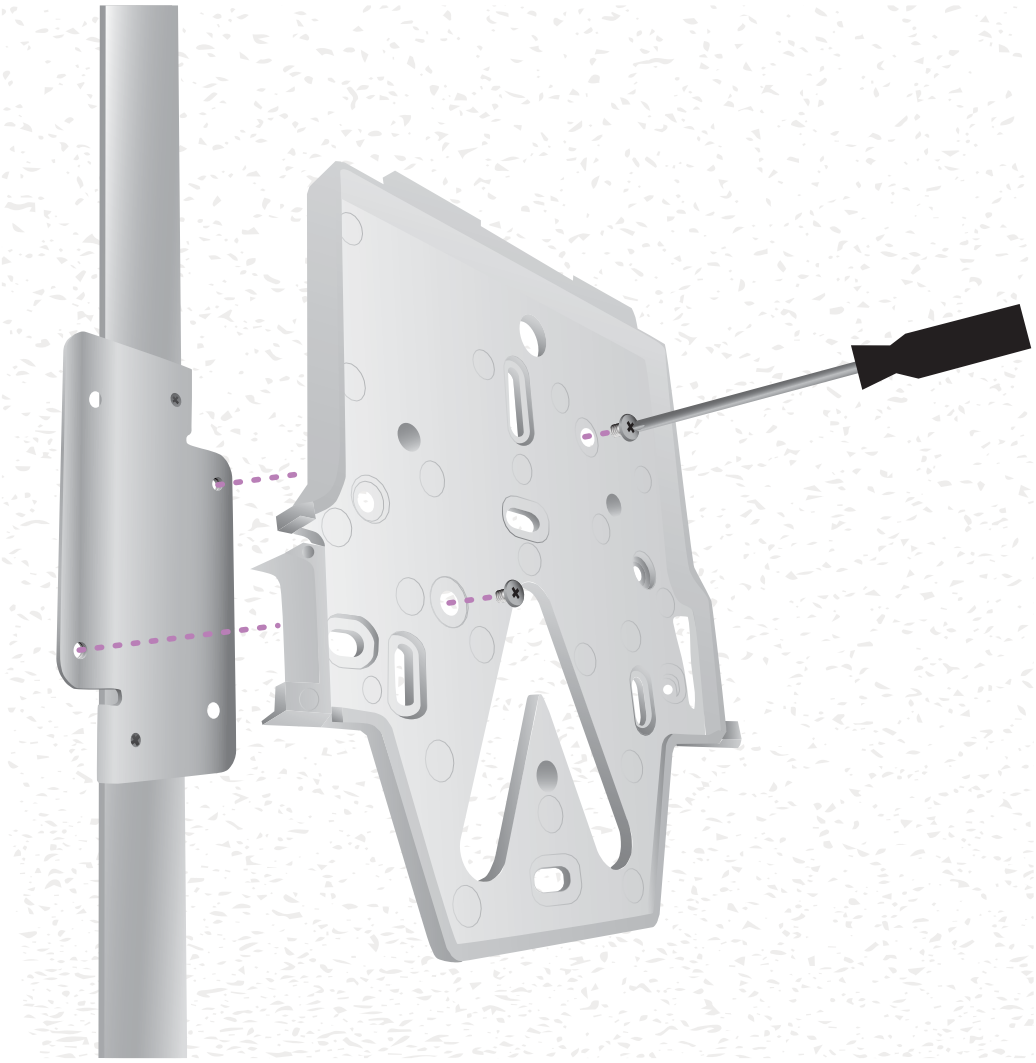

Proceed to “Connecting The AP” on page 13

Connecting The AP

The AP is powered over Ethernet, it can be powered by a PoE+ Switch or using an optional 48V, 0.5A PoE Injector.

1. Connect an Ethernet cable from your PoE+ Switch (or optional PoE Injector).

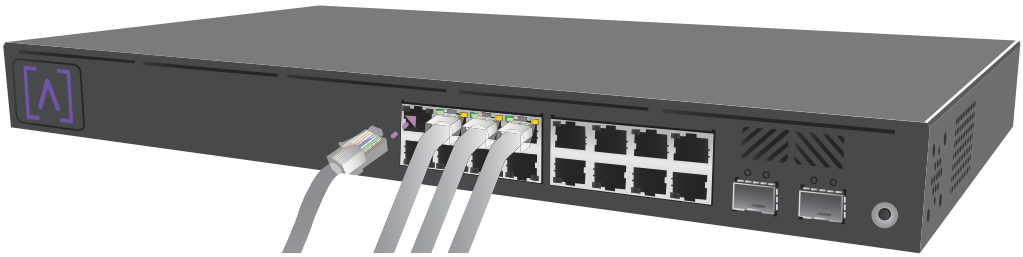

2. Connect the other end to the Ethernet Port on the AP. If mounting on the wall, the Ethernet cable can be fed through the removable notch area.

3. Align the AP with the Mounting Plate and lock each side separately until both sides are locked into place.

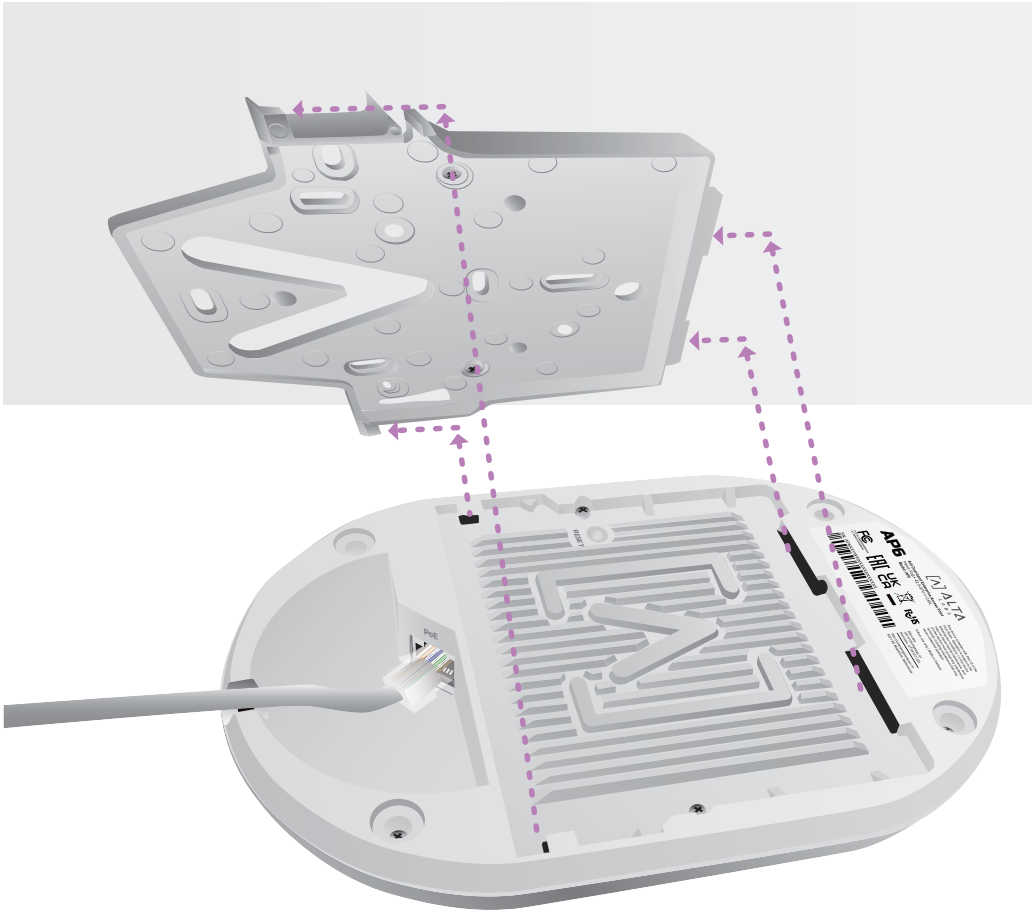

Set Up Your Device

1. Follow the instructions in the Alta app or management interface to set up your AP.

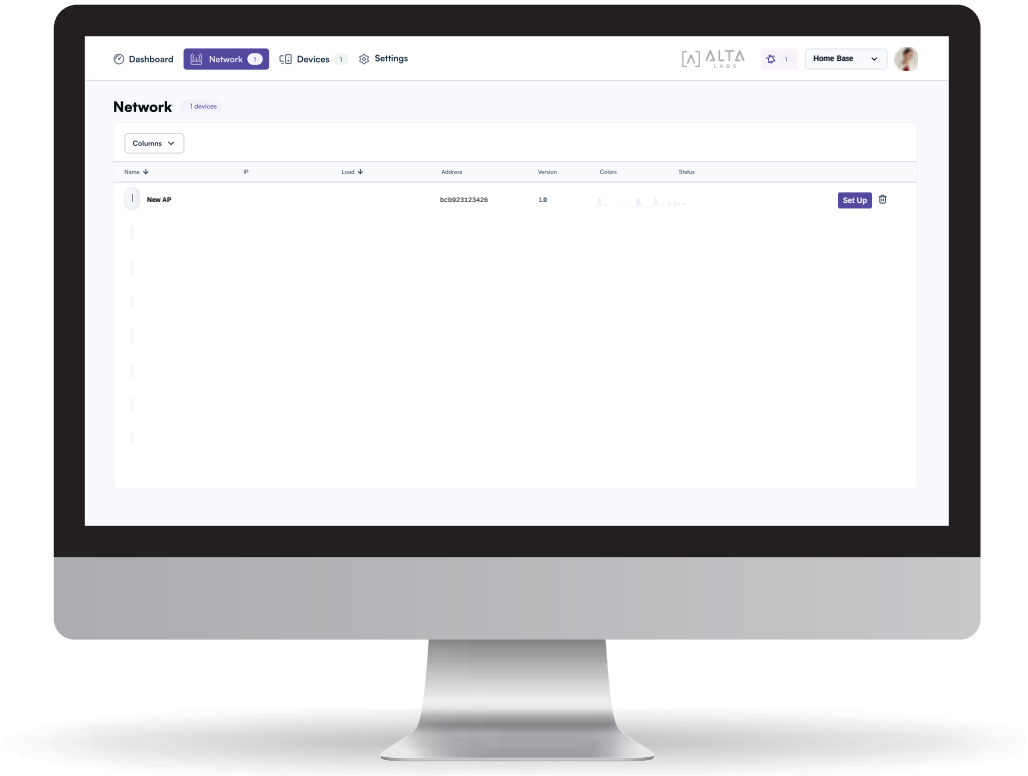

Disconnecting the AP

If you need to remove the AP from the mount, use a flat blade screwdriver to disengage the Mounting Plate at the logo indicator.

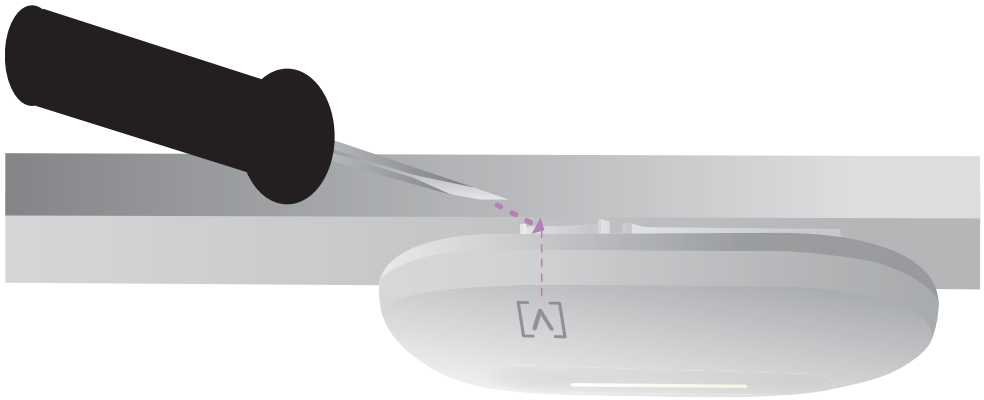

Specifications

Model: **AP6**	
Dimensions	190mm (7.5") x 125mm (4.9") 32mm (1.25")
Weight	0.4 kg (0.9 lbs)
Mount Material	Ceiling/Wall: Polycarbonate Drop Ceiling: Steel
Network Interface	Ethernet, WiFi, Bluetooth
Management Interface	(1) GbE RJ45 Port
Button(s)	Reset/Factory Reset
LED	Blue, White
Power Method	PoE+
Power Supply	PoE+ Enabled Network Switch 48V, 0.5A PoE Adapter (Optional)
Supported Voltage Range	44-57V DC
Max. Power Consumption	20W
Max. Transmit Power	2.4 GHz: 23 dBm @2NSS 5 GHz: 23 dBm @2NSS
MIMO	2.4 GHz: 2 x 2 5 GHz: 2 x 2
Throughput Rate	2.4 GHz: Up to 573 Mbps 5 GHz: Up to 2.4 Gbps
Mounting	Wall, ceiling, drop-ceiling, table top
Operating Temperature	-30 to 60° C (-22 to 140° F)
Operating Humidity	5 to 95% Noncondensing
Certifications	CE, FCC, IC

Compliance

Federal Communication Commission Interference Statement

This product has been tested and found to comply with the limits for a Class B digital device pursuant to Part 15 of the FCC Rules. These limits are designed to provide reasonable protection against harmful interference when the equipment is operated in a commercial environment. This equipment generates, uses, and can radiate radio frequency energy and, if not installed and used in accordance with the instruction manual, may cause harmful interference to radio communications. Operations of this equipment in a residential area is likely to cause harmful interference in which case the user will be required to correct the interference at his own expense.

However, there is no guarantee that interference will not occur in a particular installation. If this equipment does cause harmful interference to radio or television reception, which can be determined by turning the equipment off and on, the user is encouraged to try to correct the interference by one or more of the following measures:

- Reorient or relocate the receiving antenna.
- Increase the separation between the equipment and receiver.
- Connect the equipment into an outlet on a circuit different from that to which the receiver is connected.
- Consult the dealer or an experienced radio/TV technician for help.

FCC Caution

This device complies with Part 15 of the FCC Rules. Operation is subject to the following two conditions:

(1) This device may not cause harmful interference, and
(2) This device must accept any interference received, including interference that may cause undesired operation.

This device is restricted to indoor use.

Non-Modification Statement

Changes or modifications not expressly approved by the party responsible for compliance could void the user's authority to operate the equipment.

FCC Radiation Statement

This equipment complies with FCC radiation exposure limits set forth for an uncontrolled environment. This equipment should be installed and operated with minimum distance 20cm between the radiator and your body.

CAN ICES-003(B) / NMB-003(B)

This device contains licence-exempt transmitter(s)/ receiver(s) that comply with Innovation, Science and Economic Development Canada's licence-exempt RSS(s). Operation is subject to the following two conditions:

(1) This device may not cause interference.
(2) This device must accept any interference, including interference that may cause undesired operation of the device.

L'émetteur/récepteur exempt de licence contenu dans le présent appareil est conforme aux CNR d'Innovation, Sciences et Développement économique Canada applicables aux appareils radio exempts de licence. L'exploitation est autorisée aux deux conditions suivantes :

(1) L'appareil ne doit pas produire de brouillage;
(2) L'appareil doit accepter tout brouillage radioélectrique subi, même si le brouillage est susceptible d'en compromettre le fonctionnement.

The device for operation in the band 5150-5250 MHz is only for indoor use to reduce the potential for harmful interference to co-channel mobile satellite systems.

Les dispositifs fonctionnant dans la bande 5150-5250 MHz sont réservés uniquement pour une utilisation à l'intérieur afin de réduire les risques de brouillage préjudiciable aux systèmes de satellites mobiles utilisant les mêmes canaux.

ISED Radiation Exposure Statement:

This equipment complies with IC RSS-102 radiation exposure limits set forth for an uncontrolled environment. This equipment should be installed and operated with minimum distance 20cm between the radiator & your body.

Cet équipement est conforme aux limites d'exposition aux rayonnements IC établies pour un environnement non contrôlé. Cet équipement doit être installé et utilisé avec un minimum de 20cm de distance entre la source de rayonnement et votre corps.

The transmitter module may not be co-located with any other transmitter or antenna.

Le module émetteur peut ne pas être coïmplanté avec un autre émetteur ou antenne.

The Country Code Selection feature is disabled for products marketed in the US/Canada.

For product available in the USA/Canada market, only channel 1~11 can be operated. Selection of other channels is not possible.

Pour les produits disponibles aux États-Unis / Canada du marché, seul le canal 1 à 11 peuvent être exploités. Sélection d’autres canaux n’est pas possible.

Support

support@alta.inc

https://help.alta.inc

All specifications are subject to change without notice.
Alta Labs products are sold with a limited warranty:
soundvisiontech.com/warranty

© 2023 Soundvision Technologies. All rights reserved.
Alta Labs and Alta Control are trademarks of
Soundvision Technologies.