RF TEST REPORT

Report No.:SHATBL2607005W01

Applicant	: ShenZhen ZCS Technology CO.,LTD
Product Name	: DESKTOP TERMINAL
Brand Name	: ZONS
Model Name	: Z108
Series Model	: N/A
FCC ID	: 2A8NR-Z108
Test Standard	: FCC CFR Title 47 Part 15 Subpart C Section 15.247
Date of Sample Arrival	: Jul.02, 2026
Date of Test	: Jul.02, 2026~Jul.27, 2026
Issue Date	: Jul.27, 2026

Report Prepared by : Emily

(Emily)

Report Approved by : Guozheng Li

(Guozheng Li)

Authorized Signatory : Terry Yang

(Terry Yang)

"Shanghai ATBL Technology Co., Ltd." hereby certifies that according to actual testing conditions. The test results or observations are provided in accordance with measured value, without taking risks caused by uncertainty into account. Without explicit stipulation in special agreements, standards, or regulations, ATBL shall not assume any responsibility. The test results or observations are applicable only to tested sample. Client shall be responsible for representativeness of the sample and authenticity of the material. This report will be void without authorized signature or special seal for testing report. Do not copied without authorization.

TABLE OF CONTENTS

REVISION HISTORY 3
DECLARATION OF REPORT 4
SUMMARY OF TEST RESULT 5
1. GENERAL DESCRIPTION 6
1.1. Applicant 6
1.2. Manufacturer 6
1.3. Factory 6
1.4. General Information of EUT 7
1.5. Equipment Specification 8
1.6. Modification of EUT 8
1.7. Laboratory Information 8
1.8. Applicable Standards 8
2. TEST CONFIGURATION OF EUT 9
2.1. Carrier Frequency Channel 9
2.2. Test Modes 9
2.3. Block Diagram of Test System 10
2.4. Description of Support Units 10
2.5. Test Software and Power Level 11
2.6. EUT Operating Conditions 11
2.7. Equipment List 12
2.8. Measurement Uncertainty 14
2.9. Environmental conditions 14
3. TEST RESULT 15
3.1. Maximum Peak Conducted Output Power 15
3.2. Duty Cycle 16
3.3. 6dB Bandwidth and 99% Bandwidth 17
3.4. Power Spectral Density 19
3.5. Conducted Band Edge 20
3.6. Conducted Spurious Emission 21
3.7. Radiated Spurious Emission and Restricted Band 22
3.8. AC Power-Line Conducted Emission 25
3.9. Antenna Requirement 26
4. TEST SETUP PHOTOGRAPHS 26
5. EXTERNAL AND INTERNAL PHOTOS OF THE EUT 26

REVISION HISTORY

Rev.	Issue Date	Report No.	Effect Page	Contents
00	Jul.27, 2026	SHATBL2607005W01	ALL	Initial Release

DECLARATION OF REPORT

1. The device has been tested by ATBL, and the test results show that the equipment under test (EUT) is in compliance with the requirements of 47 CFR 15.247. And it is applicable only to the tested sample identified in the report.

2. This report shall not be reproduced except in full, without the written approval of ATBL, this document only be altered or revised by ATBL, personal only, and shall be noted in the revision of the document.

3. The general information of EUT in this report is provided by the customer or manufacture, ATBL is only responsible for the test data but not for the information provided by the customer or manufacture.

4. The results in this report is only apply to the sample as tested under conditions. The customer or manufacturer is responsible for ensuring that the additional production units of this model have the same electrical and mechanical components.

5. In this report, '☐' indicates that EUT does not support content after '☐', and '☑' indicates that it supports content after '☑'

SUMMARY OF TEST RESULT

Report Section	Standard Section	Test Item	Judgment	Remark
3.1	47 CFR 15.247(b)(3)	Maximum Peak Conducted Output Power	PASS	--
3.2	--	Duty Cycle	Report only	--
3.3	47 CFR 15.247(a)(2)	6dB Bandwidth	PASS	--
	--	99% Bandwidth	Report only	--
3.4	47 CFR 15.247(e)	Power Spectral Density	PASS	--
3.5	47 CFR 15.247(d)	Conducted Band Edge	PASS	--
3.6	47 CFR 15.247(d)	Conducted Spurious Emission	PASS	--
3.7	47 CFR 15.247(d)/15.209(a)/15.205(a)	Radiated Spurious Emission and Restricted Band	PASS	--
3.8	47 CFR 15.207(a)	AC Power-Line Conducted Emission	PASS	--
3.9	47 CFR 15.203	Antenna Requirements	PASS	--

1. GENERAL DESCRIPTION

1.1. Applicant

Name	:	ShenZhen ZCS Technology CO.,LTD
Address	:	Room 402-A, Devisen Building, No.016, Gaoxin South Seventh Road, High-Tech Zone Community Yuehai Street, Nanshan District, Shenzhen China

1.2. Manufacturer

Name	:	ShenZhen ZCS Technology CO.,LTD
Address	:	Room 402-A, Devisen Building, No.016, Gaoxin South Seventh Road, High-Tech Zone Community Yuehai Street, Nanshan District, Shenzhen China

1.3. Factory

Name	:	ShenZhen ZCS Technology CO.,LTD
Address	:	Room 402-A, Devisen Building, No.016, Gaoxin South Seventh Road, High-Tech Zone Community Yuehai Street, Nanshan District, Shenzhen China

1.4. General Information of EUT

Product Name	DESKTOP TERMINAL
Model Name	Z108
Series model	N/A
Model Difference	N/A
Sample No.	2607005002
Power supply	DC 7.6V by Battery
Adapter	Model:FX36U-120300C Input:AC 100-240V 50/60Hz 0.8A Output:DC 12V 3A
Battery	DC 7.6V 3600mAh
Hardware Version	S622C
Software Version	ZOS_V 01
Antenna Type	PIFA Antenna
Antenna Gain	2.97dBi
Connecting I/O Port(s)	Refer to the remark below

Remark:

The above information of EUT was declared by manufacturer. Please refer to the specifications or user's manual for more detailed description.

1.5. Equipment Specification

Equipment Specification		
Frequency Range	2402MHz - 2480MHz for 1Mbps; 2404MHz - 2478MHz for 2Mbps;	
Number of Channels	40CHfor 1Mbps; 38CHfor 2Mbps;	
Carrier Frequency of Each Channel	2402 + n*2 MHz; n = 0 ~ 39	
Maximum Output Power To Antenna	☑Bluetooth LE(1Mbps):	-1.96dBm
	☑Bluetooth LE(2Mbps):	-1.64dBm
Type of Modulation	Bluetooth LE:	GFSK

1.6. Modification of EUT

No modifications are made to the EUT during all test items.

1.7. Laboratory Information

Company Name	:	Shanghai ATBL Technology Co., Ltd.
Address	:	5-6/F., Unit 1, No 8, Free Trade One Life Science No. 160, Basheng Road, Pudong New District, Shanghai, China
Telephone	:	+86(0)21-51298625
FCC-Registration Number	:	485917
Designation Number	:	CN1306
A2LA Number	:	6184.01
CNAS Number	:	CNAS L14531
ISED Designation Number	:	27371
CAB identifier	:	CN0116

1.8. Applicable Standards

According to the specifications of the manufacturer, the EUT must comply with the requirements of the following standards:

47 CFR Part 15 Subpart C §15.247

FCC KDB 558074 D01 15.247 Meas Guidance v05r02

ANSI C63.10-2020+Cor 1-2023

Remark:

All test items were verified and recorded according to the standards and without any deviation during the test.

2. TEST CONFIGURATION OF EUT

2.1. Carrier Frequency Channel

Frequency Band	Channel	Frequency MHz	Channel	Frequency MHz	Channel	Frequency MHz
2402 - 2480 MHz	**00**	**2402**	14	2430	28	2458
	01	2404	15	2432	29	2460
	02	2406	16	2434	30	2462
	03	2408	17	2436	31	2464
	04	2410	18	2438	32	2466
	05	2412	**19**	**2440**	33	2468
	06	2414	20	2442	34	2470
	07	2416	21	2444	35	2472
	08	2418	22	2446	36	2474
	09	2420	23	2448	37	2476
	10	2422	24	2450	38	2478
	11	2424	25	2452	**39**	**2480**
	12	2426	26	2454	--	--
	13	2428	27	2456	--	--

Remark:

Low Channel: **CH 00_2402 MHz**; Middle Channel: **CH 19_2440 MHz**; High Channel: **CH 39_2480 MHz**.

2.2. Test Modes

The table below is showing all test modes to demonstrate in compliance with the standard.

Summary Table of Test Modes		
Test Item	Data Rate / Modulation	
	☑Bluetooth LE(1Mbps)	☑Bluetooth LE(2Mbps)
For Conducted and Radiated Test	Mode 1: CH00_2402 MHz	Mode 4: CH01_2404 MHz
	Mode 2: CH19_2440 MHz	Mode 5: CH19_2440 MHz
	Mode 3: CH39_2480 MHz	Mode 6: CH38_2478 MHz
For AC Power-line Conducted Emission	Mode 5: CH19_2440 MHz	

2.3. Block Diagram of Test System

2.3.1. For AC Power-Line Conducted Emission

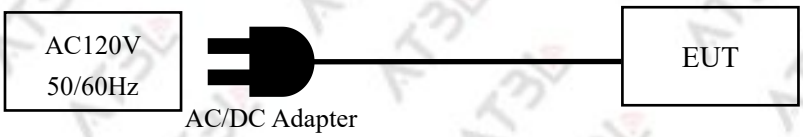

2.3.2. For Radiated Spurious Emission

2.3.3. For Conducted Test

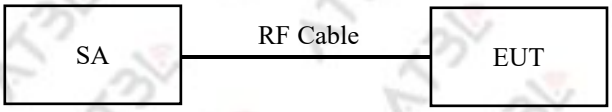

2.4. Description of Support Units

NO.	Unit	Brand	Model	S/N
1	RF Cable	PASTERNACK	PE300	5cm
2	Laptop	Lenovo	T480	PF-16A6N8
3	--	---	--	--

2.5. Test Software and Power Level

EUT Configure mode No.		Test conditions for modulation technology	
Mode A		GFSK 1Mbps	
Mode B		GFSK 2Mbps	
RF power setting value			
Channel(1Mbps)	Power setting	Channel(2Mbps)	Power setting
0	Default power-LV5	1	Default power-LV5
19	Default power-LV5	19	Default power-LV5
39	Default power-LV5	38	Default power-LV5

Note:

1).For the test results, the EUT had been tested with all conditions, and the worst-case mode of data will record in the report.

2).By means of test software which provided by manufacture, the power levels during the tests were set according to the above table.

Fixed-frequency control software

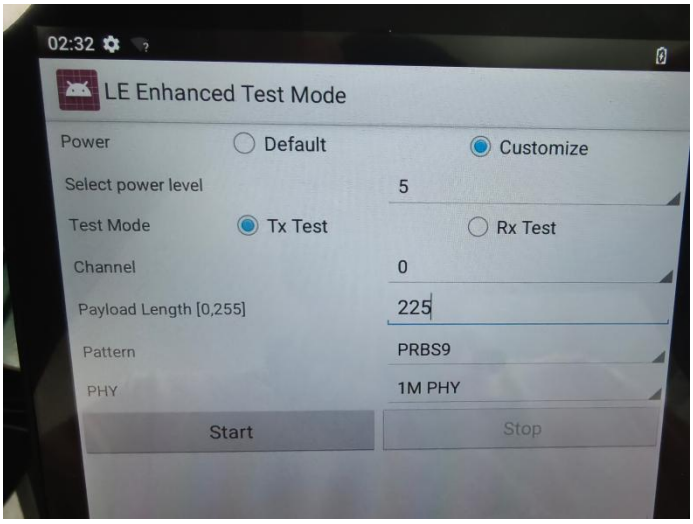

2.6. EUT Operating Conditions

For AC power-line conducted emission, the EUT was connected under the large package sizes transmission.

For radiated spurious emission and conducted test, the engineering test program was provided and make the EUT to continuous transmit/receive.

2.7. Equipment List

For AC Power-Line Conducted Emission

Kind of Equipment	Manu facturer	Type No.	Serial No.	equipment number	Calibrated until	Calibrated due until	Cal. Interval
EMI Test Receiver	R&S	ESPI	100679	SHATBL-E012	2026.03.31	2027.03.30	1 year
LISN	R&S	ENV216	101300	SHATBL-E013	2026.03.31	2027.03.30	1 year
LISN	R&S	ENV216	100333	SHATBL-E041	2026.03.31	2027.03.30	1 year
CE Cable	Chuangce xing	2M	EMI0014	SHATBL-E014	N/A	N/A	N/A
Temperature & Humidity	Deli	Deli	EMI0015	SHATBL-E015	2026.06.30	2027.06.29	1 year
Testing Software	FALA	EZ-EMC(Ver.EMC-CON 3A1.1)	EMI0044	SHATBL-E044	N/A	N/A	N/A

2.7.1. For Radiated Spurious Emission

Kind of Equipment	Manu facturer	Type No.	Serial No.	equipment number	Calibrated until	Calibrated due until	Cal. Interval
Signal analyzer	Agilent	N9020A	MY50200811	SHATBL-E017	2026.03.31	2027.03.30	1 year
Amplifier	JPT	JPA0118-55-303A	1910001800055000	SHATBL-E006	2026.03.31	2027.03.30	1 year
Amplifier	JPT	JPA-10M1G32	21010100035001	SHATBL-E005	2026.03.31	2027.03.30	1 year
Antenna/Turn table Controller	Brilliant	N/A	N/A	SHATBL-E007	N/A	N/A	N/A
Loop Antenna(9kHz-30 MHz)	Daze	ZN30900C	20077	SHATBL-E042	2026.05.20	2027.05.19	1 year
Bilog Antenna	SCHWARZBECK	VULB 9168	01174	SHATBL-E008	2026.05.20	2027.05.19	1 year
Broad-band Horn Antenna	SCHWARZBECK	BBHA 9120D	02334	SHATBL-E009	2026.05.20	2027.05.19	1 year
Horn Antenna	COM-POWER	AH-1840	10100008	SHATBL-E043	2026.06.26	2027.06.25	1 year
Thermometer	DeLi	N/A	N/A	SHATBL-E015	2026.06.30	2027.06.29	1 year
Test Software	FALA	EMC-RI(Ver.4A2)	N/A	N/A	N/A	N/A	N/A
Wideband radio communication tester	R&S	CMW500	101331	SHATBL-W044	2026.06.27	2027.06.26	1 year
Spectrum analyzer	R&S	FSV40-N	101761	SHATBL-W036	2026.06.27	2027.06.26	1 year
Filter box	XH microwave	RSE01	ATBL011	SHATBL-W036-W030	2026.06.27	2027.06.26	1 year
Coaxial cable (9KHz~26.5GHz)	XINQY	XINQYCT 26PE	CT26PE	SHATBL-W037	2026.06.27	2027.06.26	1 year
Coaxial cable (18~40GHz)	XINQY	CXN3506	CLB220E	SHATBL-W037	2026.06.27	2027.06.26	1 year

2.7.2. For Conducted Test

Kind of Equipment	Manu facturer	Type No.	Serial No.	equipment number	Calibrated until	Calibrated due until	Cal. Interval
Power sensor	DARE	RPR3006 W	16I00054SN016	SHATBL-W008	2026.06.27	2027.06.26	1 year
Adjustable Attenuator	Agilent	8494B	MY42144015	SHATBL-W009	2026.06.27	2027.06.26	1 year
Adjustable Attenuator	Agilent	8496B	MY42143776	SHATBL-W010	2026.06.27	2027.06.26	1 year
Environmental Test Chamber	KSON	THS-B6C-150	9159K	SHATBL-W019	2026.03.31	2027.03.30	1 year
Signal analyzer	Keysight	N9020A	MY50510136	SHATBL-W003	2026.06.27	2027.06.26	1 year
Vector signal generator	Agilent	N5182A	MY48180764	SHATBL-W043	2026.06.27	2027.06.26	1 year
Analog signal generator	Keysight	N5182B	MY57300196	SHATBL-W005	2026.06.27	2027.06.26	1 year
Wideband radio communication tester	R&S	CMW500	101331	SHATBL-W007	2026.06.27	2027.06.26	1 year
Switch Box	Cesheng	smu 1003	WCS20221215	SHATBL-W046	2026.03.31	2027.03.30	1 year
Thermometer	DeLi	N/A	N/A	SHATBL-W011	2026.06.30	2027.06.29	1 year
Test Software	Cesheng	WCS-WC N	N/A	SHATBL-W021	N/A	N/A	N/A
Attenuator	Xupu	2W	10002464489 7	SHATBL-W0 26	N/A	N/A	N/A

Remark:
Calibration duration for above equipments is 1 year.

2.8. Measurement Uncertainty

The reported uncertainty of measurement y±U, where expended uncertainty U is based on a standard uncertainty multiplied by a coverage factor of k=2, providing a level of confidence of approximately 95 %.

No.	Item	Uncertainty
1	RF output power, conducted	±0.958dB
2	Conducted spurious emissions	±2.988dB
3	All emissions, radiated 9KHz-30MHz	±0.96dB
4	All emissions, radiated 30MHz-1GHz	±2.50dB
5	All emissions, radiated 1GHz-18GHz	±3.51dB
6	All emissions, radiated 18GHz-40GHz	±3.56dB
7	Occupied bandwidth	±23.20Hz
8	Power spectral density	±0.886dB
9	AC Power Line Conducted Emission 0.15MHz ~ 30MHz	±1.20dB

2.9. Environmental conditions

During the measurement the environmental conditions were within the listed ranges:

Temperature	Normal Temperature:	22°C
Voltage	Normal Voltage:	DC 7.6V
Other	Relative Humidity:	57%
	Air Pressure:	102kPa

3. TEST RESULT

3.1. Maximum Peak Conducted Output Power

3.1.1.Limit

47 CFR 15.247(b)(3): For systems using digital modulation in the 902-928 MHz, 2400-2483.5 MHz, and 5725-5850 MHz bands: 1 Watt.

47 CFR 15.247(b)(4): If transmitting antennas of directional gain greater than 6dBi are used, the conducted output power from the intentional radiator shall be reduced below the stated values by the amount in dB that the directional gain of the antenna exceeds 6dBi.

47 CFR 15.247(c)(1)(i): Systems operating in the 2400–2483.5 MHz band that are used exclusively for fixed, point-to-point operations may employ transmitting antennas with directional gain greater than 6dBi provided the maximum conducted output power of the intentional radiator is reduced by 1 dB for every 3 dB that the directional gain of the antenna exceeds 6dBi.

3.1.2.Test Procedure

A peak power sensor was used on the output port of the EUT.

A peak power meter was used to read the response of the peak power sensor. Record the peak power level.

3.1.3.Test Setup

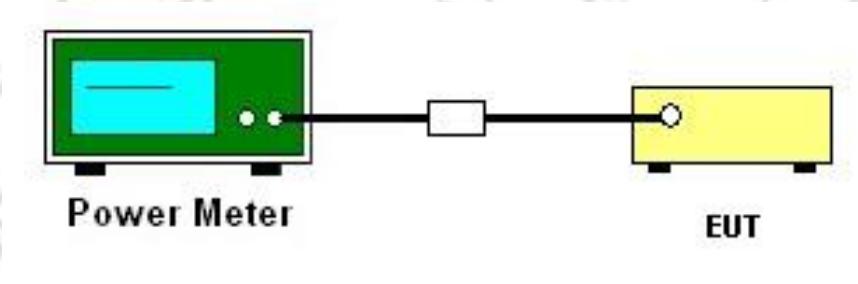

3.1.4.Test Result

Please refer to the Appendix A1_Conduction Data for BLE

3.2. Duty Cycle

3.2.1.Limit

There is no limit requirement for Duty Cycle.

3.2.2.Test Procedure

ANSI C63.10-2020+Cor 1-2023 clause 11.6: Measurements of duty cycle and transmission duration shall be performed using one of the following techniques:

1).A diode detector and an oscilloscope that together have a sufficiently short response time to permit accurate measurements of the ON and OFF times of the transmitted signal.

2).The zero-span mode on a spectrum analyzer or EMI receiver if the response time and spacing between bins on the sweep are sufficient to permit accurate measurements of the ON and OFF times of the transmitted signal:

Set the center frequency of the instrument to the center frequency of the transmission.

Set RBW ≥ OBW if possible; otherwise, set RBW to the largest available value.

Set VBW ≥ RBW. Set detector = peak or average.

The zero-span measurement method shall not be used unless both RBW and VBW are > 50/T and the number of sweep points across duration T exceeds 100. (For example, if VBW and/or RBW are limited to 3 MHz, then the zero-span method of measuring the duty cycle shall not be used if T ≤ 16.7 μs.)

3.2.3.Test Setup

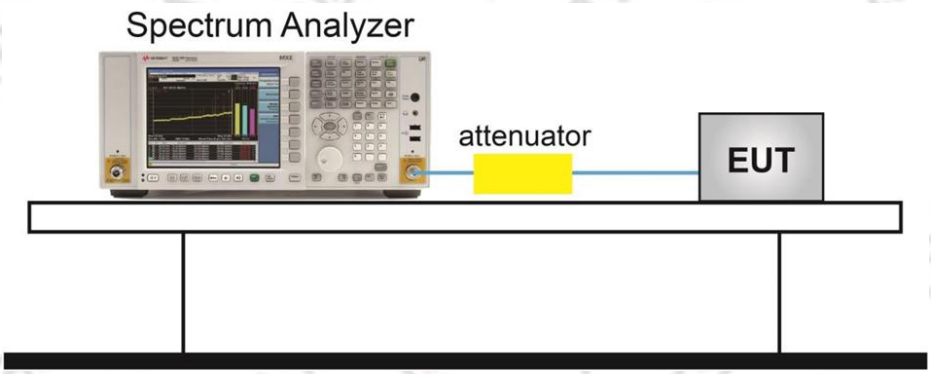

3.2.4.Test Result

Please refer to the Appendix A2_Conduction Data for BLE

3.3. 6dB Bandwidth and 99% Bandwidth

3.3.1.Limit

47 CFR 15.247(a)(2): Systems using digital modulation techniques may operate in the 902-928 MHz, 2400-2483.5 MHz, and 5725-5850 MHz bands. The minimum 6 dB bandwidth shall be at least 500 kHz.

There is no limit requirement for 99% Bandwidth.

3.3.2.Test Procedure

1).The testing of 6dB Bandwidth follows *ANSI C63.10-2020+Cor 1-2023 clause 11.8.1*: The steps for the first option are as follows:

①.Set RBW=shall be in the range of 1% to 5% of the OBW but not less than 100 kHz.

②.Set the VBW ≥ [3 × RBW].

③.Detector = peak.

④.Trace mode = max hold.

⑤.Sweep = No faster than coupled (auto) time.

⑥.Allow the trace to stabilize.

⑦.Measure the maximum width of the emission that is constrained by the frequencies associated with the two outermost amplitude points (upper and lower frequencies) that are attenuated by 6 dB relative to the maximum level measured in the fundamental emission.

2).The testing of 99% Bandwidth follows *ANSI C63.10-2020+Cor 1-2023 clause 6.9.3*: The occupied bandwidth is the frequency bandwidth such that, below its lower and above its upper frequency limits, the mean powers are each equal to 0.5% of the total mean power of the given emission. The following procedure shall be used for measuring 99% power bandwidth:

①.The instrument center frequency is set to the nominal EUT channel center frequency. The frequency span for the spectrum analyzer shall be between 1.5 times and 5.0 times the OBW.

②.The nominal IF filter bandwidth (3 dB RBW) shall be in the range of 1% to 5% of the OBW, and VBW shall be at least three times the RBW, unless otherwise specified by the applicable requirement.

③.Set the reference level of the instrument as required, keeping the signal from exceeding the maximum input mixer level for linear operation. In general, the peak of the spectral envelope shall be more than [10 log (OBW/RBW)] below the reference level. Specific guidance is given in *ANSI C63.10-2020+Cor 1-2023 clause 4.1.5.2*.

④.Step a) through step c) might require iteration to adjust within the specified range.

⑤.Video averaging is not permitted. Where practical, a sample detection and single sweep mode shall be used. Otherwise, peak detection and max hold mode (until the trace stabilizes) shall be

used.

⑥.Use the 99% power bandwidth function of the instrument (if available) and report the measured bandwidth.

⑦.If the instrument does not have a 99% power bandwidth function, then the trace data points are recovered and directly summed in linear power terms. The recovered amplitude data points, beginning at the lowest frequency, are placed in a running sum until 0.5% of the total is reached; that frequency is recorded as the lower frequency. The process is repeated until 99.5% of the total is reached; that frequency is recorded as the upper frequency. The 99% power bandwidth is the difference between these two frequencies.

⑧.The occupied bandwidth shall be reported by providing plot(s) of the measuring instrument display; the plot axes and the scale units per division shall be clearly labeled. Tabular data may be reported in addition to the plot(s).

3.3.3.Test Setup

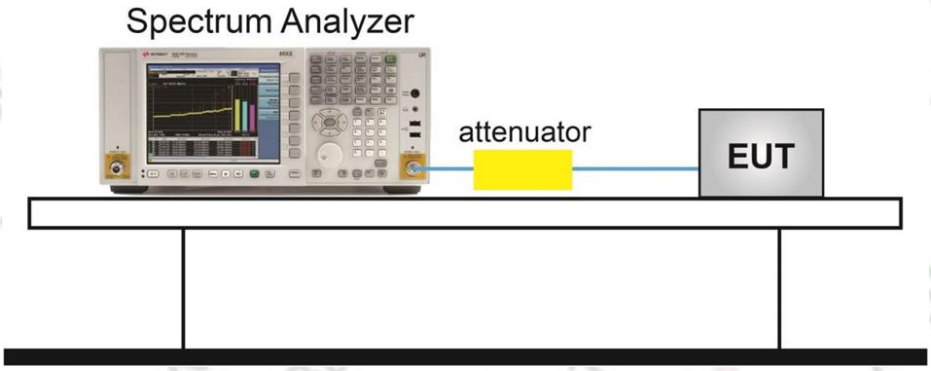

3.3.4.Test Result

Please refer to the Appendix A3_Conduction Data for BLE

3.4. Power Spectral Density

3.4.1.Limit

47 CFR 15.247(e): For digitally modulated systems, the power spectral density conducted from the intentional radiator to the antenna shall not be greater than 8 dBm in any 3 kHz band during any time interval of continuous transmission.

3.4.2.Test Procedure

ANSI C63.10-2020+Cor 1-2023 clause 11.10.2: The following procedure shall be used if maximum peak conducted output power was used to determine compliance, and it is optional if the maximum conducted (average) output power was used to determine compliance:

1).Set analyzer center frequency to DTS channel center frequency.

2).Set the span to 1.5 times the DTS bandwidth.

3).Set the RBW to 3 kHz< RBW≤ 100 kHz.

4).Set the VBW ≥ [3 × RBW].

5).Detector = peak.

6).Sweep time = No faster than coupled (auto) time.

7).Trace mode = max hold.

8).Allow trace to fully stabilize.

9).Use the peak marker function to determine the maximum amplitude level within the RBW.

If measured value exceeds requirement, then reduce RBW (but no less than 3 kHz) and repeat.

3.4.3.Test Setup

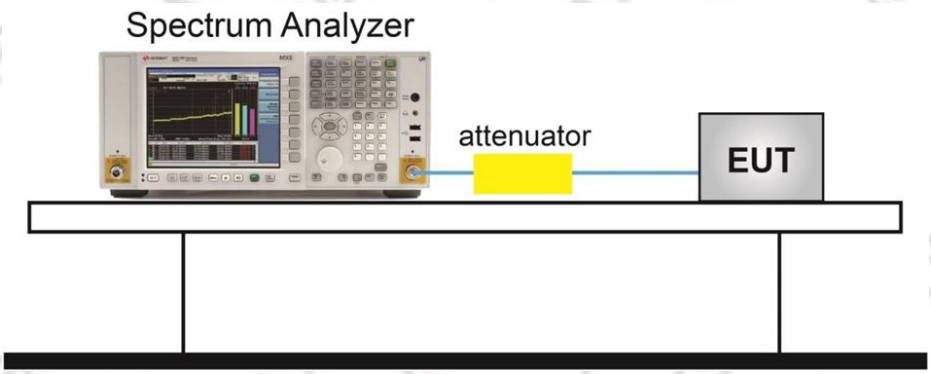

3.4.4.Test Result

Please refer to the Appendix A4_Conduction Data for BLE

3.5. Conducted Band Edge

3.5.1.Limit

47 CFR 15.247(d): In any 100 kHz bandwidth outside the frequency band in which the spread spectrum or digitally modulated intentional radiator is operating, the radio frequency power that is produced by the intentional radiator shall be at least 20 dB below that in the 100 kHz bandwidth within the band that contains the highest level of the desired power, based on either an RF conducted or a radiated measurement, provided the transmitter demonstrates compliance with the peak conducted power limits.

3.5.2.Test Procedure

1).The testing follows *ANSI C63.10-2020+Cor 1-2023 clause 11.13*.

2).Set to the maximum power setting and enable the EUT transmit continuously.

3).Set RBW = 100 kHz, VBW=300 kHz, Peak Detector. Conducted Band Edge measured in any 100 kHz bandwidth outside of the authorized frequency band shall be attenuated by at least 20 dB relative to the 100 kHz bandwidth within the band that contains the highest level of the desired power when maximum peak conducted output power procedure is used. If the transmitter complies with the conducted power limits based on the use of RMS averaging over a time interval, the attenuation required under this paragraph shall be 30 dB instead of 20 dB.

4).Measure and record the results in the test report.

5).The RF fundamental frequency should be excluded against the limit line in the operating frequency band.

3.5.3.Test Setup

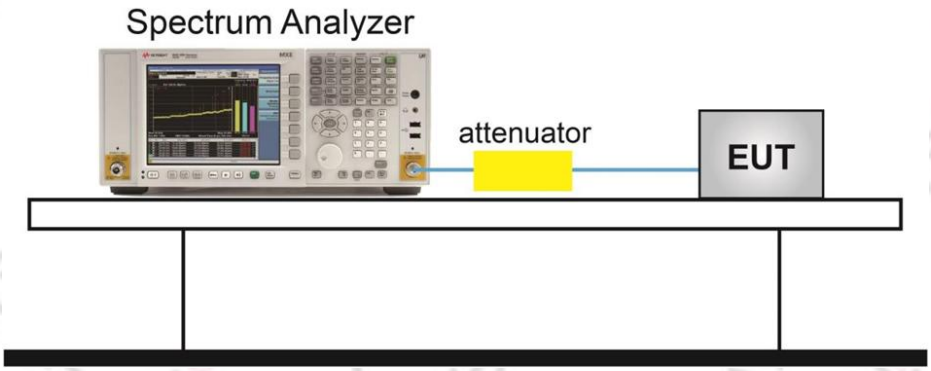

3.5.4.Test Result

Please refer to the Appendix A5_Conduction Data for BLE

3.6. Conducted Spurious Emission

3.6.1.Limit

47 CFR 15.247(d): In any 100 kHz bandwidth outside the frequency band in which the spread spectrum or digitally modulated intentional radiator is operating, the radio frequency power that is produced by the intentional radiator shall be at least 20 dB below that in the 100 kHz bandwidth within the band that contains the highest level of the desired power, based on either an RF conducted or a radiated measurement, provided the transmitter demonstrates compliance with the peak conducted power limits.

3.6.2.Test Procedure

1).The testing follows *ANSI C63.10-2020+Cor 1-2023 clause 7.8.8*.

2).The RF output of EUT was connected to the spectrum analyzer by RF cable and attenuator.

3).The path loss was compensated to the results for each measurement.

4).Set to the maximum power setting and enable the EUT transmit continuously.

5).Set RBW = 100 kHz, VBW = 300kHz, scan up through 10th harmonic. All harmonics / spurs must be at least 20 dB down from the highest emission level within the authorized band as measured with a 100 kHz RBW.

6).Measure and record the results in the test report.

7).The RF fundamental frequency should be excluded against the limit line in the operating frequency band.

3.6.3.Test Setup

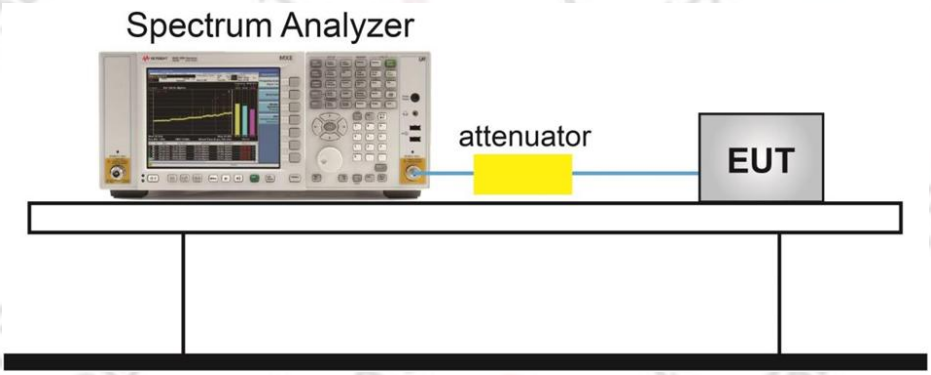

3.6.4.Test Result

Please refer to the Appendix A5_Conduction Data for BLE

3.7. Radiated Spurious Emission and Restricted Band

3.7.1. Limit

47 CFR 15.247(d): In any 100 kHz bandwidth outside the frequency band in which the spread spectrum or digitally modulated intentional radiator is operating, the radio frequency power that is produced by the intentional radiator shall be at least 20 dB below that in the 100 kHz bandwidth within the band that contains the highest level of the desired power, based on either an RF conducted or a radiated measurement, provided the transmitter demonstrates compliance with the peak conducted power limits.

47 CFR 15.205(a): Only spurious emissions are permitted in any of the frequency bands listed below:

Frequency (MHz)	Frequency (MHz)	Frequency (MHz)	Frequency (MHz)	Frequency (GHz)
0.090-0.110	12.29-12.293	149.9-150.05	1660-1710	8.025-8.5
0.495-0.505	12.51975-12.52025	156.52475-156.52525	1718.8-1722.2	9.0-9.2
2.1735-2.1905	12.57675-12.57725	156.7-156.9	2200-2300	9.3-9.5
4.125-4.128	13.36-13.41	162.0125-167.17	2310-2390	10.6-12.7
4.17725-4.17775	16.42-16.423	167.72-173.2	2483.5-2500	13.25-13.4
4.20725-4.20775	16.69475-16.69525	240-285	2690-2900	14.47-14.5
6.215-6.218	16.80425-16.80475	322-335.4	3260-3267	15.35-16.2
6.26775-6.26825	25.5-25.67	399.9-410	3332-3339	17.7-21.4
6.31175-6.31225	37.5-38.25	608-614	3345.8-3358	22.01-23.12
8.291-8.294	73-74.6	960-1240	3600-4400	23.6-24.0
8.362-8.366	74.8-75.2	1300-1427	4500-5150	31.2-31.8
8.37625-8.38675	108-121.94	1435-1626.5	5350-5460	36.43-36.5
8.41425-8.41475	123-138	1645.5-1646.5	7250-7750	Above 38.6

47 CFR 15.209(a): The emissions from an intentional radiator shall not exceed the field strength levels specified in the following table:

Frequency (MHz)	Field strength (microvolts/meter)	Measurement distance (meters)
0.009-0.490	2400/F(kHz)	300
0.490-1.705	24000/F(kHz)	30
1.705-30.0	30	30
30-88	100	3
88-216	150	3
216-960	200	3
Above 960	500	3

3.7.2. Test Procedure

1).The testing follows ANSI C63.10-2020+Cor 1-2023 clause 11.11 & 11.12.

2).The EUT was arranged to its worst case and then tune the antenna tower (from 1 m to 4 m) and turntable (from 0 degree to 360 degrees) to find the maximum reading. A pre-amp and a high pass filter are used for the test in order to get better signal level.

3).The EUT was placed on a turntable with 0.8 meter for frequency below 1GHz and 1.5 meter for frequency above 1GHz respectively above ground.

4).The EUT was set 3 meters from the interference receiving antenna, which was mounted on the top of a variable height antenna tower.

5).Corrected Reading: Antenna Factor + Cable Loss + Read Level - Pre-amp Factor = Level.

6).For testing below 1GHz, if the emission level of the EUT in peak mode was 3 dB lower than the limit specified, then peak values of EUT will be reported, otherwise, the emissions will be repeated one by one using the CISPR quasi-peak method and reported.

7).For testing above 1GHz, the emission level of the EUT in peak mode was 20dB lower than peak limit (that means the emission level in average mode also complies with the limit in average mode), then peak values of EUT will be reported, otherwise, the emissions will be measured in average mode again and reported.

Use the following spectrum analyzer settings:

① Span shall wide enough to fully capture the emission being measured;

② When frequency < 1 GHz:

• Set RBW=100 kHz; VBW ≥ RBW; Sweep = auto; Detector function = peak; Trace = max hold;

③ When frequency ≥ 1 GHz:

• Set RBW = 1 MHz; VBW = 3 MHz for peak measurement;

• Set RBW = 1 MHz; VBW = 10 Hz, when duty cycle is no less than 98 percent or VBW ≥ 1/T, when duty cycle is less than 98 percent where T is the minimum transmission duration over which the transmitter is on and is transmitting at its maximum power control level for the tested mode of operation.

3.7.3. Test Setup

For radiated emissions below 30MHz

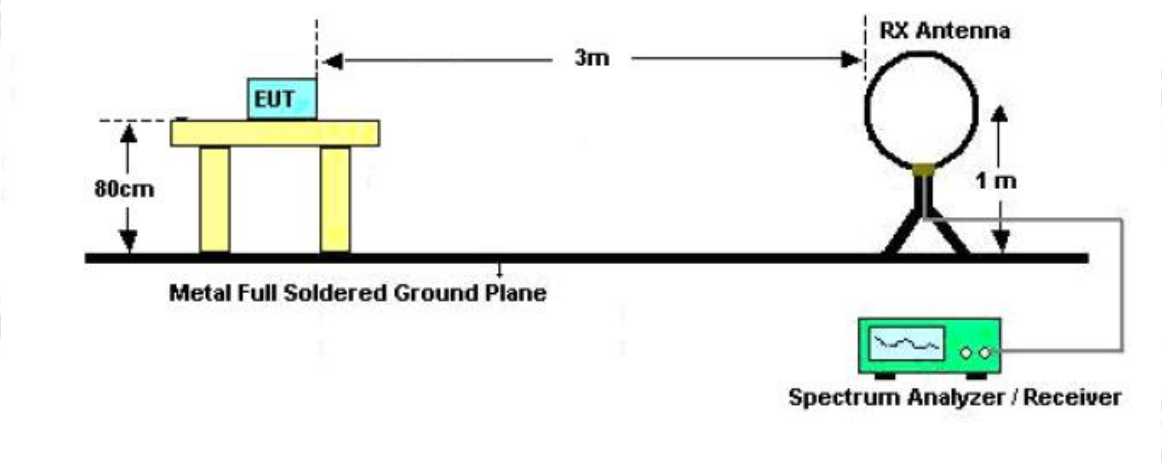

For radiated emissions from 30MHz to 1GHz

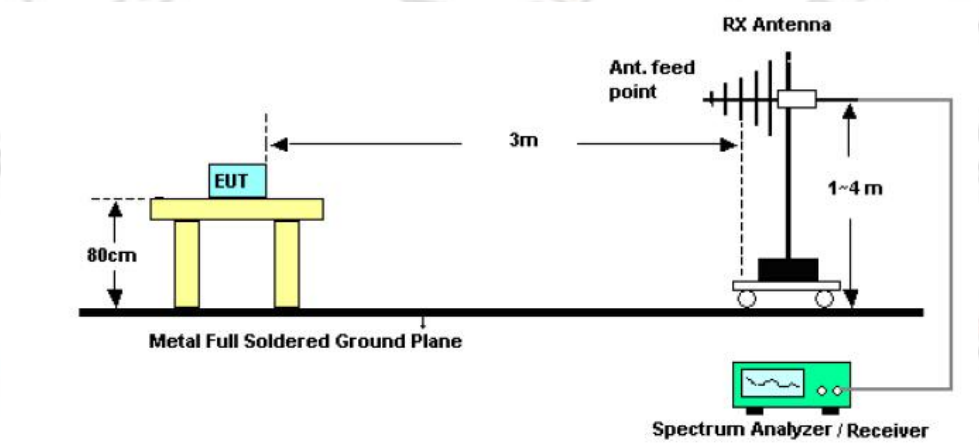

For radiated emissions above 1GHz

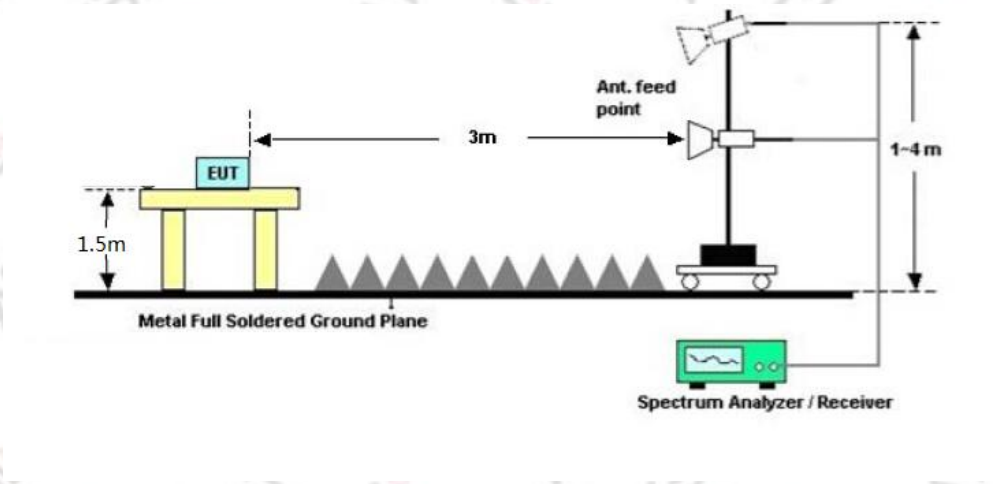

3.7.4. Test Result

Please refer to the Appendix B_Radiated Spurious Emission Data for BLE.

3.8. AC Power-Line Conducted Emission

3.8.1.Limit

47 CFR 15.207(a): For an intentional radiator that is designed to be connected to the public utility (AC) power line, the radio frequency voltage that is conducted back onto the AC power line on any frequency or frequencies, within the band 150 kHz to 30 MHz, shall not exceed the limits in the following table:

Frequency of emission (MHz)	Conducted limit (dBμV)	
	Quasi-peak	Average
0.15-0.5	66 to 56*	56 to 46*
0.5-5	56	46
5-30	60	50

*Decreases with the logarithm of the frequency.

3.8.2.Test Procedure

1).The EUT was placed 0.4 meter from the conducting wall of the shielding room was kept at least 80 centimeters from any other grounded conducting surface.

2).Connect EUT to the power mains through a line impedance stabilization network (LISN).

3).All the support units are connecting to the other LISN.

4).The LISN provides 50 ohm coupling impedance for the measuring instrument.

5).The FCC states that a 50 ohm, 50 microhenry LISN should be used.

6).Both sides of AC line were checked for maximum conducted interference.

7).The frequency range from 150 kHz to 30 MHz was searched.

8).Set the test-receiver system to Peak Detect Function and specified bandwidth (IF Bandwidth = 9 kHz) with Maximum Hold Mode. Then measurement is also conducted by Average Detector and Quasi-Peak Detector Function respectively.

3.8.3.Test Setup

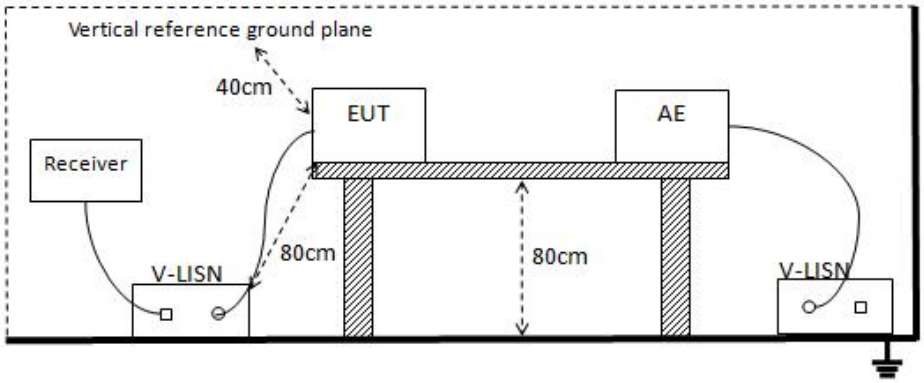

3.8.1. Test Result

Please refer to the Appendix B_Radiated Spurious Emission Data for BLE.

3.9. Antenna Requirement

Standard Requirement

According to *47 CFR 15.203*, an intentional radiator shall be designed to ensure that no antenna other than that furnished by the responsible party shall be used with the device.

EUT Antenna

The antenna used for the EUT is PIFA antenna, which meets the antenna requirements.

4. TEST SETUP PHOTOGRAPHS

Please refer to the Appendix C.

5. EXTERNAL AND INTERNAL PHOTOS OF THE EUT

External Please refer to the Appendix D.

Internal Please refer to the Appendix D.

※※※※※END OF THE REPORT※※※※※