RF TEST REPORT

Report No.: SHATBL2607005W07

Applicant	:	ShenZhen ZCS Technology CO.,LTD
Product Name	:	DESKTOP TERMINAL
Brand Name	:	ZONS
Model Name	:	Z108
Series Model	:	N/A
FCC ID	:	2A8NR-Z108
Test Standard	:	47 CFR Part 2;47 CFR Part 22;47 CFR Part 24; 47 CFR Part 27;
Date of Sample Arrival	:	Jul.02, 2026
Date of Test	:	Jul.02, 2026~Aug.04, 2026
Issue Date	:	Aug.04, 2026

Report Prepared by : Emily

(Emily)

Report Approved by : Guozheng Li

(Guozheng Li)

Authorized Signatory : Terry Yang

(Terry Yang)

"Shanghai ATBL Technology Co., Ltd." hereby certifies that according to actual testing conditions. The test results or observations are provided in accordance with measured value, without taking risks caused by uncertainty into account. Without explicit stipulation in special agreements, standards or regulations, ATBL shall not assume any responsibility. The test results or observations are applicable only to tested sample. Client shall be responsible for representativeness of the sample and authenticity of the material. This report will be void without authorized signature or special seal for testing report. Do not copied without authorization.

TABLE OF CONTENTS

REVISION HISTORY 3
DECLARATION OF REPORT 4
SUMMARY OF TEST RESULT 5
1. GENERAL DESCRIPTION 8
1.1. Applicant 8
1.2. Manufacturer 8
1.3. Factory 8
1.4. General Information of EUT 9
1.5. Equipment Specification 10
1.6. Maximum Conducted Power and Emission Designator 11
1.7. Modification of EUT 12
1.8. Laboratory Information 13
1.9. Applicable Standards 13
2. TEST CONFIGURATION OF EQUIPMENT UNDER TEST 14
2.1. Test Mode 14
2.2. Connection Diagram of Test System 15
2.3. Support Unit used in test configuration and system 15
2.4. Frequency List of Low/Middle/High Channels 16
2.5. Equipment List 18
2.6. Measurement Uncertainty 20
2.7. Environmental conditions 20
3. TEST RESULT 21
3.1. Conducted Output Power and ERP/EIRP 21
3.2. Peak-to-Average Ratio 22
3.3. Occupied Bandwidth 23
3.4. Conducted Band Edge 25
3.5. Conducted Spurious Emission 28
3.6. Frequency Stability 29
3.7. Radiated Spurious Emission 30
Radiated spurious emissions - MS allocated a channel: 32
4. TEST SETUP PHOTOGRAPHS 32
5. EXTERNAL AND INTERNAL PHOTOS OF THE EUT 32

REVISION HISTORY

Rev.	Issue Date	Report No.	Effect Page	Contents
00	Aug.04, 2026	SHATBL2607005W07	ALL	Initial Release

DECLARATION OF REPORT

1. The device has been tested by ATBL, and the test results show that the equipment under test (EUT) is in compliance with the requirements of FCC Require. And it is applicable only to the tested sample identified in the report.

2. This report shall not be reproduced except in full, without the written approval of ATBL, this document only be altered or revised by ATBL, personal only, and shall be noted in the revision of the document.

3. The general information of EUT in this report is provided by the customer or manufacture, ATBL is only responsible for the test data but not for the information provided by the customer or manufacture.

4. The results in this report is only apply to the sample as tested under conditions. The customer or manufacturer is responsible for ensuring that the additional production units of this model have the same electrical and mechanical components.

SUMMARY OF TEST RESULT

For Band5

Test Item	FCC Rule No.	Limit	Result	Verdict (Note1)
Effective (Isotropic) Radiated Power Output Data	Part 22.913 (a)	ERP ≤ 7 W	Pass	Appendix A1
Peak-Average Ratio	Part 2.1046, 22.913 (a)	Limit≤13 dB	Pass	Appendix A2
Frequency Stability	Part 2.1055, 22.355	≤ ± 2.5 ppm.	Pass	Appendix A3
Occupied Bandwidth	Part 2.1049	OBW: No limit. EBW: No limit.	Pass	Appendix A4
Spurious Emission at Antenna Terminals	Part 2.1051, 22.917	≤ -13 dBm/1 MHz, from 9 kHz to 10th harmonics but outside authorized operating frequency ranges.	Pass	Appendix A5
Band Edges Compliance	Part 22.917	≤ -13 dBm/1%*EBW, in 1 MHz bands immediately outside and adjacent to the frequency block.	Pass	Appendix A6
Modulation Characteristics	Part 2.1047	Digital modulation	Pass	Appendix A7
Radiated Spurious Emissions	Part 2.1053, 22.917	≤ -13 dBm/1 MHz.	Pass	Appendix B

Note1:
For the verdict, the “N/A” denotes “not applicable”, the “N/T” denotes “not tested”.

For Band2

Test Item	FCC Rule No.	Limit	Result	Verdict (Note1)
Effective (Isotropic) Radiated Power Output Data	Part 24.232	EIRP ≤ 2 W	Pass	Appendix A1
Peak-Average Ratio	Part 2.1046, 24.232	Limit≤13 dB	Pass	Appendix A2
Occupied Bandwidth	Part 2.1049	OBW: No limit. EBW: No limit.	Pass	Appendix A3
Band Edges Compliance	Part 2.1051, 24.238	≤ -13 dBm/1%*EBW, in 1 MHz bands immediately outside and adjacent to the frequency block.	Pass	Appendix A4
Spurious Emission at Antenna Terminals	Part 2.1051, 24.238	≤ -13 dBm/1 MHz, from 9 kHz to 10th harmonics but outside authorized operating frequency ranges.	Pass	Appendix A5
Frequency Stability	Part 2.1055, 24.235	≤ ± 2.5 ppm.	Pass	Appendix A6
Modulation Characteristics	Part 2.1047	Digital modulation	Pass	Appendix A7
Radiated Spurious Emissions	Part 2.1053, 24.238	≤ -13 dBm/1 MHz.	Pass	Appendix B

Note1:
For the verdict, the “N/A” denotes “not applicable”, the “N/T” denotes “not tested”.

For Band4,Band7,Band17,Band40

Test Item	FCC Rule No.	Limit	Result	Verdict (Note1)
Effective (Isotropic) Radiated Power Output Data	Part 27.50(d) (Band4)	EIRP ≤ 1 W	Pass	Appendix A1
	Part 27.50(h) (Band7)	EIRP ≤ 2W	Pass	Appendix A1
	Part 27.50(c) (Band17)	ERP ≤ 3W	Pass	Appendix A1
	Part 27.50(a) (Band40)	EIRP ≤ 250mW	Pass	Appendix A1
Peak-Average Ratio	Part 2.1046, 27.50(d)	Limit≤13 dB	Pass	Appendix A2
Frequency Stability	Part 2.1055, 27.54	≤ ± 2.5 ppm.	Pass	Appendix A3
Occupied Bandwidth	Part 2.1049	OBW: No limit. EBW: No limit.	Pass	Appendix A4
Spurious Emission at Antenna Terminals	Part 2.1051, 27.53(h)	≤ -13 dBm/1 MHz, from 9 kHz to 10th harmonics but outside authorized operating frequency ranges.	Pass	Appendix A5
Band Edges Compliance	Part 2.1051, 27.53(h)	≤ -13 dBm/1%*EBW, in 1 MHz bands immediately outside and adjacent to the frequency block.	Pass	Appendix A6
Modulation Characteristics	Part 2.1047	Digital modulation	Pass	Appendix A7
Radiated Spurious Emissions	Part 2.1053, 27.53(h)	≤ -13 dBm/1 MHz.	Pass	Appendix B

Note1:
For the verdict, the “N/A” denotes “not applicable”, the “N/T” denotes “not tested”.

1. GENERAL DESCRIPTION

1.1. Applicant

Name	:	ShenZhen ZCS Technology CO.,LTD
Address	:	Room 402-A, Devisen Building, No.016, Gaoxin South Seventh Road, High-Tech Zone Community Yuehai Street, Nanshan District, Shenzhen China

1.2. Manufacturer

Name	:	ShenZhen ZCS Technology CO.,LTD
Address	:	Room 402-A, Devisen Building, No.016, Gaoxin South Seventh Road, High-Tech Zone Community Yuehai Street, Nanshan District, Shenzhen China

1.3. Factory

Name	:	ShenZhen ZCS Technology CO.,LTD
Address	:	Room 402-A, Devisen Building, No.016, Gaoxin South Seventh Road, High-Tech Zone Community Yuehai Street, Nanshan District, Shenzhen China

1.4. General Information of EUT

General Information	
Test Sample	2607005009
Product Name:	DESKTOP TERMINAL
Brand Name	ZONS
Model Name	Z108
Series Model	N/A
Model Difference	N/A
Power supply	DC 7.6V by Battery
Adapter	Model:FX36U-120300C Input:AC 100-240V 50/60Hz 0.8A Output:DC 12V 3A
Battery	DC 7.6V 3600mAh
Hardware Version	S622C
Software Version	ZOS_V 01
SIM Card Description:	The prototype supports dual cards
Connecting I/O Port(s)	Refer to the remark below.

Remark:

The above information of EUT was declared by manufacturer. Please refer to the specifications or user's manual for more detailed description.

1.5. Equipment Specification

Standards-related Product Specification		
Frequency		
Band	**Tx Frequency Range**	**Rx Frequency Range**
☑ Band 2	1850 MHz ~ 1910 MHz	1930 MHz ~ 1990 MHz
☑ Band 4	1710 MHz ~ 1755 MHz	2110 MHz ~ 2155 MHz
☑ Band 5	824 MHz ~ 849 MHz	869 MHz ~ 894 MHz
☑ Band 7	2500 MHz ~ 2570 MHz	2620 MHz ~ 2690 MHz
☑ Band 17	704 MHz ~ 716 MHz	734 MHz ~ 746 MHz
☑ Band 40	2305MHz ~ 2315MHz; 2350MHz ~ 2360MHz	2305MHz ~ 2315MHz; 2350MHz ~ 2360MHz
Bandwidth		
Band	**Bandwidth**	
☑ Band 2	1.4MHz / 3MHz / 5MHz / 10MHz / 15MHz / 20MHz	
☑ Band 4	1.4MHz / 3MHz / 5MHz / 10MHz / 15MHz / 20MHz	
☑ Band 5	1.4MHz / 3MHz / 5MHz / 10MHz	
☑ Band 7	5MHz / 10MHz / 15MHz / 20MHz	
☑ Band 17	5MHz / 10MHz	
☑ Band 40	5MHz / 10MHz	
Antenna Gain		
Band	**Antenna Gain**	
☑ Band 2	1.13	
☑ Band 4	-2.46	
☑ Band 5	-2.97	
☑ Band 7	1.33	
☑ Band 17	-2.54	
☑ Band 40	-0.63	
Maximum Output Power to Antenna		
Band	**Maximum Conducted Output Power**	
☑ Band 2	23.09	
☑ Band 4	23.53	
☑ Band 5	23.51	
☑ Band 7	25.6	
☑ Band 17	22.49	
☑ Band 40	18.57	
Type of Modulation		
☑ QPSK ☑ 16QAM ☐ 64QAM ☐ 256QAM		

1.6. Maximum Conducted Power and Emission Designator

☑ LTE Band 2				
Bandwidth (MHz)	☑ QPSK		☑ 16QAM	
	Maximum Conducted Power (dBm)	Emission Designator (99% OBW)	Maximum Conducted Power (dBm)	Emission Designator (99% OBW)
1.4	22.95	1M09G7D	22.02	1M08W7D
3	22.95	2M68G7D	22.11	2M68W7D
5	23.08	4M49G7D	22.36	4M47W7D
10	23.03	8M94G7D	22.36	8M94W7D
15	22.9	13M46G7D	22.18	13M42W7D
20	23.09	17M95G7D	22.66	17M95W7D

☑ LTE Band 4				
Bandwidth (MHz)	☑ QPSK		☑ 16QAM	
	Maximum Conducted Power (dBm)	Emission Designator (99% OBW)	Maximum Conducted Power (dBm)	Emission Designator (99% OBW)
1.4	23.53	1M08G7D	22.48	1M08W7D
3	23.37	2M68G7D	22.78	2M67W7D
5	23.46	4M46G7D	22.72	4M47W7D
10	23.49	8M97G7D	22.78	8M94W7D
15	23.35	13M41G7D	22.67	13M41W7D
20	23.5	17M89G7D	22.99	17M95W7D

☑ LTE Band 5				
Bandwidth (MHz)	☑ QPSK		☑ 16QAM	
	Maximum Conducted Power (dBm)	Emission Designator (99% OBW)	Maximum Conducted Power (dBm)	Emission Designator (99% OBW)
1.4	23.51	1M08G7D	22.48	1M08W7D
3	23.37	2M68G7D	22.72	2M67W7D
5	23.42	4M47G7D	22.68	4M47W7D
10	23.48	8M97G7D	22.76	8M94W7D

☑ LTE Band 7				
Bandwidth (MHz)	☑ QPSK		☑ 16QAM	
	Maximum Conducted Power (dBm)	Emission Designator (99% OBW)	Maximum Conducted Power (dBm)	Emission Designator (99% OBW)
5	25.31	4M46G7D	24.53	4M47W7D
10	25.39	8M94G7D	24.6	9M0W7D
15	25.6	13M46G7D	24.95	13M46W7D
20	25.56	18M0G7D	24.39	17M95W7D

☑ LTE Band 17				
Bandwidth (MHz)	☑ QPSK		☑ 16QAM	
	Maximum Conducted Power (dBm)	Emission Designator (99% OBW)	Maximum Conducted Power (dBm)	Emission Designator (99% OBW)
5	22.34	4M47G7D	21.64	4M47W7D
10	22.49	8M94G7D	21.82	8M94W7D

☑ LTE Band 40 2305MHz ~ 2315MHz				
Bandwidth (MHz)	☑ QPSK		☑ 16QAM	
	Maximum Conducted Power (dBm)	Emission Designator (99% OBW)	Maximum Conducted Power (dBm)	Emission Designator (99% OBW)
5	18.57	4M49G7D	17.59	4M46W7D
10	18.5	8M94G7D	17.37	8M94W7D

☑ LTE Band 40 2350MHz ~ 2360MHz				
Bandwidth (MHz)	☑ QPSK		☑ 16QAM	
	Maximum Conducted Power (dBm)	Emission Designator (99% OBW)	Maximum Conducted Power (dBm)	Emission Designator (99% OBW)
5	17.01	4M47G7D	16.37	4M47W7D
10	17.04	8M98G7D	16.07	8M98W7D

1.7. Modification of EUT

No modifications are made to the EUT during all test items.

1.8. Laboratory Information

Company Name	:	Shanghai ATBL Technology Co., Ltd.
Address	:	5-6/F., Unit 1, No 8, Free Trade One Life Science No. 160, Basheng Road, Pudong New District, Shanghai, China
Telephone	:	+86(0)21-51298625
FCC-Registration Number	:	485917
Designation Number	:	CN1306
A2LA-Lab Cert. No.	:	6184.01
ISED Designation Number	:	27371

1.9. Applicable Standards

According to the specifications of the manufacturer, the EUT must comply with the requirements of the following standards:

47 CFR Part 2, 22(H), 24(E), 27(C)

ANSI C63.26-2015

FCC KDB 971168 D01 Power Meas License Digital Systems v03r01

FCC KDB 412172 D01 Determining ERP and EIRP v01r01

Remark:

All test items were verified and recorded according to the standards and without any deviation during the test.

2. TEST CONFIGURATION OF EQUIPMENT UNDER TEST

2.1. Test Mode

Antenna port conducted and radiated test items listed below are performed according to KDB 971168 D01 Power Meas License Digital Systems v03r01 with maximum output power.

Radiated measurements are performed by rotating the EUT in three different orthogonal test planes to find the maximum emission. (X-Plane).

Test Items	Band	Bandwidth (MHz)						Modulation				RB #			Test Channel		
		1.4	**3**	**5**	**10**	**15**	**20**	QPSK	16QAM			1	Half	Full	L	M	H
Max. Output Power	2	√	√	√	√	√	√	√	√			√		√	√	√	√
	4	√	√	√	√	√	√	√	√			√		√	√	√	√
	5	√	√	√	√			√	√			√		√	√	√	√
	7			√	√	√	√	√	√			√		√	√	√	√
	17			√	√			√	√			√		√	√	√	√
	40			√	√			√	√			√		√	√	√	√
Peak-to-Average Ratio	2	√	√	√	√	√	√	√	√			√		√	√	√	√
	4	√	√	√	√	√	√	√	√			√		√	√	√	√
	5	√	√	√	√			√	√			√		√	√	√	√
	7			√	√	√	√	√	√			√		√	√	√	√
	17			√	√			√	√			√		√	√	√	√
	40			√	√			√	√			√		√	√	√	√
26dB and 99% Bandwidth	2	√	√	√	√	√	√	√	√			√		√	√	√	√
	4	√	√	√	√	√	√	√	√			√		√	√	√	√
	5	√	√	√	√			√	√			√		√	√	√	√
	7			√	√	√	√	√	√			√		√	√	√	√
	17			√	√			√	√			√		√	√	√	√
	40			√	√			√	√			√		√	√	√	√
Conducted Band Edge	2	√	√	√	√	√	√	√	√			√		√	√		√
	4	√	√	√	√	√	√	√	√			√		√	√		√
	5	√	√	√	√			√	√			√		√	√		√
	7			√	√	√	√	√	√			√		√	√		√
	17			√	√			√	√			√		√	√		√
	40			√	√			√	√			√		√	√		√
Conducted Spurious Emission	2	√	√	√	√	√	√	√	√			√		√	√	√	√
	4	√	√	√	√	√	√	√	√			√		√	√	√	√
	5	√	√	√	√			√	√			√		√	√	√	√
	7			√	√	√	√	√	√			√		√	√	√	√
	17			√	√			√	√			√		√	√	√	√
	40			√	√			√	√			√		√	√	√	√
Frequency Stability	2	√	√	√	√	√	√	√	√			√		√	√	√	√
	4	√	√	√	√	√	√	√	√			√		√	√	√	√
	5	√	√	√	√			√	√			√		√	√	√	√
	7			√	√	√	√	√	√			√		√	√	√	√
	17			√	√			√	√			√		√	√	√	√
	40			√	√			√	√			√		√	√	√	√
E.R.P / E.I.R.P	2	√	√	√	√	√	√	√	√			√		√	√	√	√
	4	√	√	√	√	√	√	√	√			√		√	√	√	√
	5	√	√	√	√			√	√			√		√	√	√	√
	7			√	√	√	√	√	√			√		√	√	√	√
	17			√	√			√	√			√		√	√	√	√
	40			√	√			√	√			√		√	√	√	√
Radiated Spurious Emission	2	Worst Case													√	√	√
	4	Worst Case													√	√	√
	5	Worst Case													√	√	√
	7	Worst Case													√	√	√
	17	Worst Case													√	√	√
	40	Worst Case													√	√	√
Note	1. The mark "√" means that this configuration is chosen for testing. 2. When a cell is empty, it means it is not supported or does not require testing. 3. The device is investigated from 30MHz to 10 times of fundamental signal for radiated spurious emission test under different RB size/offset and modulations in exploratory test. Subsequently, only the worst case emissions are reported.																

2.2. Connection Diagram of Test System

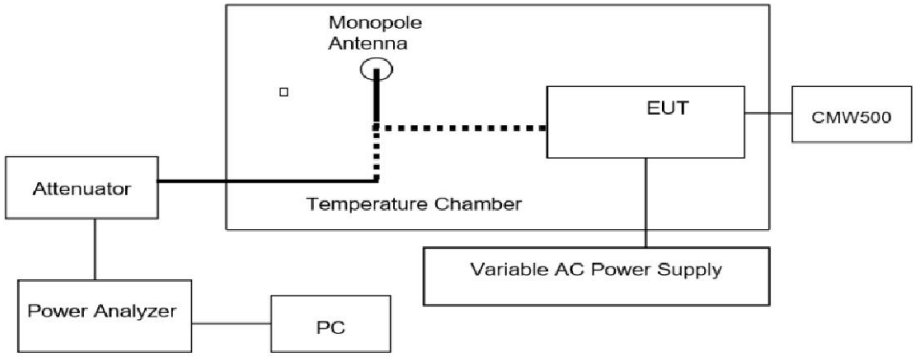

Remarks:
The Signal Analyzer could be connected to a Monopole antenna or directly connected to the EUT, if the EUT has already employing an antenna connector.

2.3. Support Unit used in test configuration and system

No.	Unit	Brand	Model	Description
1	--	--	--	--
2	--	--	--	--

2.4. Frequency List of Low/Middle/High Channels

LTE Band 2 Channel and Frequency List				
BW [MHz]	Channel/Frequency(MHz)	Lowest	Middle	Highest
20	Channel	18700	18900	19100
	Frequency	1860	1880	1900
15	Channel	18675	18900	19125
	Frequency	1857.5	1880	1902.5
10	Channel	18650	18900	19150
	Frequency	1855	1880	1905
5	Channel	18625	18900	19175
	Frequency	1852.5	1880	1907.5
3	Channel	18615	18900	19185
	Frequency	1851.5	1880	1908.5
1.4	Channel	18607	18900	19193
	Frequency	1850.7	1880	1909.3

LTE Band 4 Channel and Frequency List				
BW [MHz]	Channel/Frequency(MHz)	Lowest	Middle	Highest
20	Channel	20050	20175	20300
	Frequency	1720	1732.5	1745
15	Channel	20025	20175	20325
	Frequency	1717.5	1732.5	1747.5
10	Channel	20000	20175	20350
	Frequency	1715	1732.5	1750
5	Channel	19975	20175	20375
	Frequency	1712.5	1732.5	1752.5
3	Channel	19965	20175	20385
	Frequency	1711.5	1732.5	1753.5
1.4	Channel	19957	20175	20393
	Frequency	1710.7	1732.5	1754.3

LTE Band 5 Channel and Frequency List				
BW [MHz]	Channel/Frequency(MHz)	Lowest	Middle	Highest
10	Channel	20450	20525	20600
	Frequency	829	836.5	844
5	Channel	20425	20525	20625
	Frequency	826.5	836.5	846.5
3	Channel	20415	20525	20635
	Frequency	825.5	836.5	847.5
1.4	Channel	20407	20525	20643
	Frequency	824.7	836.5	848.3

LTE Band 7 Channel and Frequency List				
BW [MHz]	Channel/Frequency(MHz)	Lowest	Middle	Highest
20	Channel	20850	21100	21350
	Frequency	2510.0	2535.0	2560.0
15	Channel	20825	21100	21375
	Frequency	2507.5	2535.0	2562.5
10	Channel	20800	21100	21400
	Frequency	2050.0	2535.0	2565.0
5	Channel	20775	21100	21425
	Frequency	2502.5	2535.0	2567.5

LTE Band 17 Channel and Frequency List				
BW [MHz]	Channel/Frequency(MHz)	Lowest	Middle	Highest
10	Channel	23780	23790	23800
	Frequency	709.0	710.0	711.0
5	Channel	23755	23790	23825
	Frequency	706.5	710	713.5

LTE Band 40 Channel and Frequency List 2305MHz ~ 2315MHz				
BW [MHz]	Channel/Frequency (MHz)	Lowest	Middle	Highest
10	Channel	38750	38750	38750
	Frequency	2310.0	2310.0	2310.0
5	Channel	38725	38750	38755
	Frequency	2307.5	2310.0	2312.5

LTE Band 40 Channel and Frequency List 2350MHz ~ 2360MHz				
BW [MHz]	Channel/Frequency (MHz)	Lowest	Middle	Highest
10	Channel	39200	39200	39200
	Frequency	2355.0	2355.0	2355.0
5	Channel	39175	39200	39225
	Frequency	2352.5	2355.0	2357.5

2.5. Equipment List

2.5.1. For Conducted Test

Kind of Equipment	Manufacturer	Type No.	Serial No.	Calibrated until	Calibrated due until	Cal. Interval
Power sensor-Card reader	Cesheng	smu 1003	16I00054SN016	2026.06.27	2027.06.26	1 year
Adjustable Attenuator	Agilent	8494B	MY42144015	2026.06.27	2027.06.26	1 year
Adjustable Attenuator	Agilent	8496B	MY42143776	2026.06.27	2027.06.26	1 year
Environmental Test Chamber	KSON	THS-B6C-150	9159K	2026.03.31	2027.03.30	1 year
Signal analyzer	Keysight	N9020A	MY50510136	2026.06.27	2027.06.26	1 year
Vector signal generator	Agilent	N5182A	MY48180764	2026.06.27	2027.06.26	1 year
Analog signal generator	Keysight	N5182B	MY57300196	2026.06.27	2027.06.26	1 year
Wideband radio communication tester	R&S	CMW500	101331	2026.06.27	2027.06.26	1 year
Switch Box	Cesheng	smu 1003	WCS20221215	2026.03.31	2027.03.30	1 year
Thermometer	DeLi	N/A	N/A	2026.06.30	2027.06.29	1 year
Test Software	Cesheng	WCS-WCN	N/A	N/A	N/A	N/A

2.5.2. For Radiated Spurious Emission

Kind of Equipment	Manufacturer	Type No.	Serial No.	Calibrated until	Calibrated due until	Cal. Interval
Signal analyzer	Agilent	N9020A	MY50200811	2026.03.31	2027.03.30	1 year
Amplifier	JPT	JPA0118-55-303A	1910001800055000	2026.03.31	2027.03.30	1 year
Amplifier	JPT	JPA-10M1G32	21010100035001	2026.03.31	2027.03.30	1 year
Antenna/Turn table Controller	Brilliant	N/A	N/A	N/A	N/A	N/A
Loop Antenna(9kHz-30MHz)	Daze	ZN30900C	20077	2026.05.20	2027.05.19	1 year
Bilog Antenna	SCHWARZBECK	VULB 9168	01174	2026.05.20	2027.05.19	1 year
Broad-band Horn Antenna	SCHWARZBECK	BBHA 9120D	02334	2026.05.20	2027.05.19	1 year
Horn Antenna	COM-POWER	AH-1840	10100008	2026.06.26	2027.06.25	1 year
Thermometer	DeLi	N/A	N/A	2026.06.30	2027.06.29	1 year
Test Software	FALA	EMC-RI(Ver.4A2)	N/A	N/A	N/A	N/A
Wideband radio communication tester	R&S	CMW500	101331	2026.06.27	2027.06.26	1 year
Spectrum analyzer	R&S	FSV40-N	101761	2026.06.27	2027.06.26	1 year
Vector signal generator	Keysight	N5182B	MY50200811	2026.06.27	2027.06.26	1 year
Alternative Horn Antenna	Schwarzbeck	BBHA 9120D	2802	2026.06.27	2027.06.26	1 year
Filter Box	XingBo	EZSVFU1&EZSVFU2	N/A	2026.06.27	2027.06.26	1 year

2.5.3. For AC Power-Line Conducted Emission

Kind of Equipment	Manufacturer	Type No.	Serial No.	Calibrated until	Calibrated due until	Cal. Interval
EMI Test Receiver	R&S	ESPI	100679	2026.03.31	2027.03.30	1 year
LISN	R&S	ENV216	101300	2026.03.31	2027.03.30	1 year
LISN	R&S	ENV216	100333	2026.03.31	2027.03.30	1 year
CE Cable	Chuangcexing	2M	EMI0014	N/A	N/A	N/A
Temperature & Humidity	Deli	Deli	EMI0015	2026.06.30	2027.06.29	1 year
Testing Software	FALA	EZ-EMC(Ver.EMC-CON 3A1.1)	EMI0044	N/A	N/A	N/A
Wideband radio communication tester	R&S	CMW500	101331	2026.06.28	2027.06.27	1 year

2.6. Measurement Uncertainty

The reported uncertainty of measurement y±U, where expended uncertainty U is based on a standard uncertainty multiplied by a coverage factor of k=2, providing a level of confidence of approximately 95 %.

No.	Item	Uncertainty
1	Occupied Channel Bandwidth	±4%
2	Transmitter power conducted	±0.56 dB
3	Transmitter power Radiated	±2.20 dB
4	Conducted spurious emission	±1.60 dB
5	Radiated spurious emission	±2.20 dB
6	Temperature	±0.6℃
7	Humidity	±2%
8	DC and low frequency voltages	±0.05%
9	Radio frequency error	$\pm 3\times 10^{-8}$

2.7. Environmental conditions

Temperature	Normal Temperature(NT):	25°C
	High Temperature(HT):	40°C
	Low Temperature(LT):	0°C
Voltage	Normal Voltage(NV):	7.6V
	High Voltage(HV):	8.36V
	Low Voltage(LV):	6.84V
Other	Relative Humidity	55 %
	Air Pressure	101 kPa

3. TEST RESULT

3.1. Conducted Output Power and ERP/EIRP

3.1.1. Test Limit

3.The EIRP of mobile transmitters must not exceed 2 Watts for LTE Band 2,Band 7.

4.The EIRP of mobile transmitters must not exceed 1 Watts for LTE Band 4 .

1.The ERP of mobile transmitters must not exceed 7 Watts for LTE Band 5.

4.The ERP of mobile transmitters must not exceed 3 Watts for LTE Band 17.

5.The EIRP of mobile transmitters must not exceed 250mWatts for LTE Band 40.

3.1.2. Test Setup

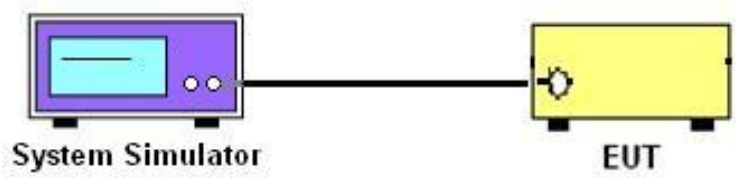

3.1.3. Test Procedures

1.The measurements procedures specified in KDB 971168 D01 -Section 5.6 were applied.

Test Settings as follows:

Subclause 5.2.5.5 of ANSI C63.26-2015 is applicable, along with the following provisions.

For personal/portable radios utilizing an integral antenna, the factor LC is typically negligible. However, in a fixed station transmit system that utilizes a long cable run between the transmitter and the transmitting antenna, this factor can be significant. The minimum cable loss should be used in this equation.

2.The relevant equation for determining the ERP or EIRP from the conducted RF output power measured is:

EIRP=PMeas - LC + GT; ERP = EIRP -2.15

Where:

ERP/EIRP = effective or equivalen radiated power, respectively (expressed in the same units as PMeas, typically dBW or dBm).

PMeas = measured transmitter output power or PSD, in dBW or dBm.

LC = signal attenuation in the connecting cable between the transmitter and antenna in dB.

GT = gain of the transmitting antenna, in dBd (ERP) or dBi (EIRP).

3.1.4. Test Result of Conducted Output Power and ERP/EIRP

Please refer to the Appendix A_Conduction Test data for LTE

3.2. Peak-to-Average Ratio

3.2.1. Test Setup

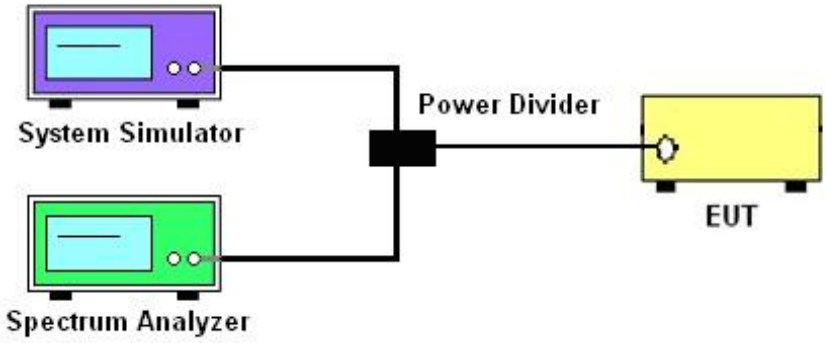

3.2.2. Description of the PAR Measurement

1).Power Complementary Cumulative Distribution Function (CCDF) curves provide a means for characterizing the power peaks of a digitally modulated signal on a statistical basis.

2).A CCDF curve depicts the probability of the peak signal amplitude exceeding the average power level.

3).Most contemporary measurement instrumentation include the capability to produce CCDF curves for an input signal provided that the instrument's resolution bandwidth can be set wide enough to accommodate the entire input signal bandwidth.

4).In measuring transmissions in this band using an average power technique.

Limit:the peak-to-average ratio (PAR) of the transmission may not exceed 13 dB.

3.2.3. Test Procedures

1).The testing follows ANSI C63.26 Section 5.2.3.4 (CCDF).

2).The EUT was connected to spectrum and system simulator via a power divider.

3).Set the CCDF (Complementary Cumulative Distribution Function) option in spectrum analyzer.

4).The highest RF powers were measured and recorded the maximum PAPR level associated with a probability of 0.1 %.

5).Record the deviation as Peak to Average Ratio.

3.2.4. Test Result of Peak-to-Average Ratio

Please refer to the Appendix A_Conduction Test data for LTE

3.3. Occupied Bandwidth

3.3.1. Test Setup

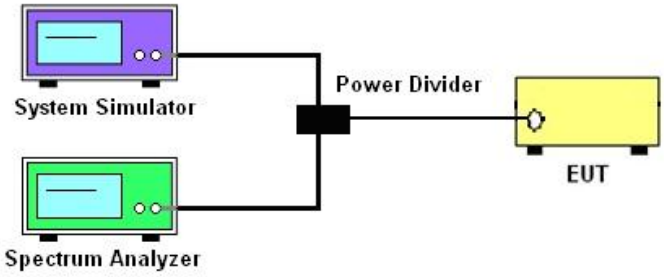

3.3.2. Description of Occupied Bandwidth Measurement

The occupied bandwidth is the width of a frequency band such that, below the lower and above the upper frequency limits, the mean powers emitted are each equal to a specified percentage 0.5% of the total mean transmitted power.

The 26 dB emission bandwidth is defined as the frequency range between two points, one above and one below the carrier frequency, at which the spectral density of the emission is attenuated 26 dB below the maximum in-band spectral density of the modulated signal. Spectral density (power per unit bandwidth) is to be measured with a detector of resolution bandwidth equal to approximately 1.0% of the emission bandwidth.

3.3.3. Test Procedures

1.The measurements procedures specified in KDB 971168 D01 -Section 4.2 were applied. The testing follows ANSI C63.26 Section 5.4. Settings as follows:

2.The EUT was connected to spectrum analyzer and system simulator via a power divider.

3.The spectrum analyzer center frequency is set to the nominal EUT channel center frequency. The span range for the spectrum analyzer shall be between two and five times the anticipated OBW.

4.The nominal resolution bandwidth (RBW) shall be in the range of 1 to 5 % of the anticipated OBW, and the VBW shall be at least 3 times the RBW.

5.Set the detection mode to peak, and the trace mode to max hold.

6.Determine the reference value: Set the EUT to transmit a modulated signal. Allow the trace to stabilize. Set the spectrum analyzer marker to the highest level of the displayed trace.(this is the reference value)

7.Determine the "-26 dB down amplitude" as equal to (Reference Value – X).

8.Place two markers, one at the lowest and the other at the highest frequency of the envelope of the spectral display such that each marker is at or slightly below the "–X dB down amplitude" determined in step 6. If a marker is below this "-X dB down amplitude" value it shall be placed as

close as possible to this value. The OBW is the positive frequency difference between the two markers.

9.Use the 99 % power bandwidth function of the spectrum analyzer and report the measured bandwidth.

3.3.4. Test Result of Occupied Bandwidth

Please refer to the Appendix A_Conduction Test data for LTE

3.4. Conducted Band Edge

3.4.1. Test Setup

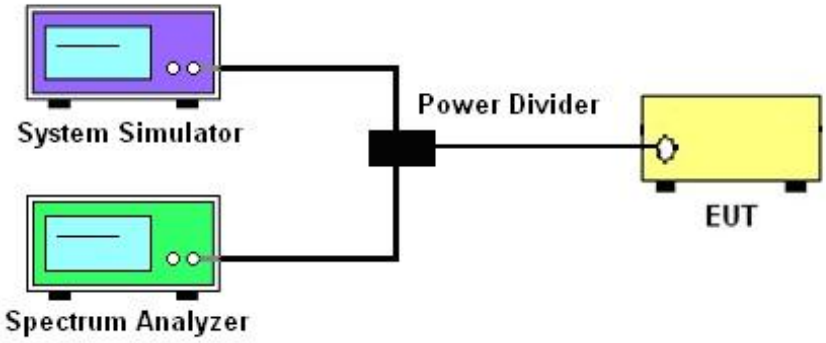

3.4.2. Description of Conducted Band Edge Measurement

22.917(a):

For operations in the 824 – 849 MHz band, the FCC limit is 43 + 10log10(P[Watts]) dB below the transmitter power P(Watts) in a 100kHz bandwidth. However, in the 1MHz bands immediately outside and adjacent to the licensee's frequency block, a resolution bandwidth of at least one percent of the emission bandwidth of the fundamental emission of the transmitter may be employed.

24.238 (a):

For operations in the 1850-1910 and 1930-1990 MHz band, the FCC limit is 43 + 10log10(P[Watts]) dB below the transmitter power P(Watts) in a 1MHz bandwidth. However, in the 1 MHz bands immediately outside and adjacent to the frequency block a resolution bandwidth of at least one percent of the emission bandwidth of the fundamental emission of the transmitter may be employed.

27.53 (g):

For operations in the 600MHz band and 698 -746 MHz band, the FCC limit is 43 + 10log10(P[Watts]) dB below the transmitter power P(Watts) in a 100 kHz bandwidth. However, in the 100 kilohertz bands immediately outside and adjacent to a licensee's frequency block, a resolution bandwidth of at least 30 kHz may be employed.

27.53 (h):

For operations in the 1710 – 1755 MHz and 1710 – 1780 MHz band, the FCC limit is 43 + 10log10(P[Watts]) dB below the transmitter power P(Watts) in a 1 MHz bandwidth. However, in the 1MHz bands immediately outside and adjacent to the licensee's frequency block, a resolution bandwidth of at least one percent of the emission bandwidth of the fundamental emission of the transmitter may be employed.

27.53 (m):

Per §27.53 (m)(6) Measurement procedure. Compliance with these rules is based on the use of measurement instrumentation employing a resolution bandwidth of 1 megahertz or greater. However, in the 1 MHz bands immediately outside and adjacent to the frequency block a

resolution bandwidth of at least one percent of the emission bandwidth of the fundamental emission of the transmitter may be employed; for mobile digital stations, in the 1 megahertz bands immediately outside and adjacent to the frequency block a resolution bandwidth of at least two percent may be employed, except when the 1 megahertz band is 2495–2496 MHz, in which case a resolution bandwidth of at least one percent may be employed. A narrower resolution bandwidth is permitted in all cases to improve measurement accuracy provided the measured power is integrated over the full required measurement bandwidth (i.e. 1 megahertz or 1 percent of emission bandwidth, as specified; or 1 megahertz or 2 percent for mobile digital stations, except in the band 2495–2496 MHz). The emission bandwidth is defined as the width of the signal between two points, one below the carrier center frequency and one above the carrier center frequency, outside of which all emissions are attenuated at least 26 dB below the transmitter power. With respect to television operations, measurements must be made of the separate visual and aural operating powers at sufficiently frequent intervals to ensure compliance with the rules.

(m)(4) For mobile digital stations, the attenuation factor shall be not less than 40 + 10 log (P) dB on all frequencies between the channel edge and 5 megahertz from the channel edge, 43 + 10 log (P) dB on all frequencies between 5 megahertz and X megahertz from the channel edge, and 55 + 10 log (P) dB on all frequencies more than X megahertz from the channel edge, where X is the greater of 6 megahertz or the actual emission bandwidth as defined in paragraph (m)(6) of this section. In addition, the attenuation factor shall not be less that 43 + 10 log (P) dB on all frequencies between 2490.5 MHz and 2496 MHz and 55 + 10 log (P) dB at or below 2490.5 MHz. Mobile Satellite Service licensees operating on frequencies below 2495 MHz may also submit a documented interference complaint against BRS licensees operating on channel BRS Channel 1 on the same terms and conditions as adjacent channel BRS or EBS licensees. Show citation box. For operations in the 1710–1780 MHz and 2110–2200 MHz bands, the power of any emission outside a licensee's frequency block shall be attenuated below the transmitter power (P) by at least 43 + 10 log10(P) dB.

3.4.3. Test Procedures

1.The measurements procedures specified in KDB 971168 D01 -Section 6.0 were applied. The testing follows ANSI C63.26 Section 5.7. Settings as follows:

2.The EUT was connected to spectrum analyzer and system simulator via a power divider.

3.The band edges of low and high channels for the highest RF powers were measured.

4.Set RBW >= 1% EBW in the 1MHz band immediately outside and adjacent to the band edge.

5.Beyond the 1 MHz band from the band edge, RBW=1MHz was used or a narrower RBW was used and the measured power was integrated over the full required measurement bandwidth of 1 MHz.

6.Set spectrum analyzer with RMS detector.

7.The RF fundamental frequency should be excluded against the limit line in the operating frequency band.

8.Checked that all the results comply with the emission limit line.

Example:

The limit line is derived from 43 + 10log(P)dB below the transmitter power P(Watts)

= P(W)- [43 + 10log(P)] (dB)

= [30 + 10log(P)] (dBm) - [43 + 10log(P)] (dB) = -13dBm

9.When using the integration method, the starting frequency of the integration shall be centered at one-half of the RBW away from the band edge.

3.4.4. Test Result of Conducted Band Edge

Please refer to the Appendix A_Conduction Test data for LTE

3.5. Conducted Spurious Emission

3.5.1. Test Limit

1.The power of any emission outside of the authorized operating frequency ranges must be lower than the transmitter power (P) by a factor of at least 43 + 10 log (P) dB.

2.It is measured by means of a calibrated spectrum analyzer and scanned from 30 MHz up to a frequency including its 10th harmonic.

3.5.2. Test Setup

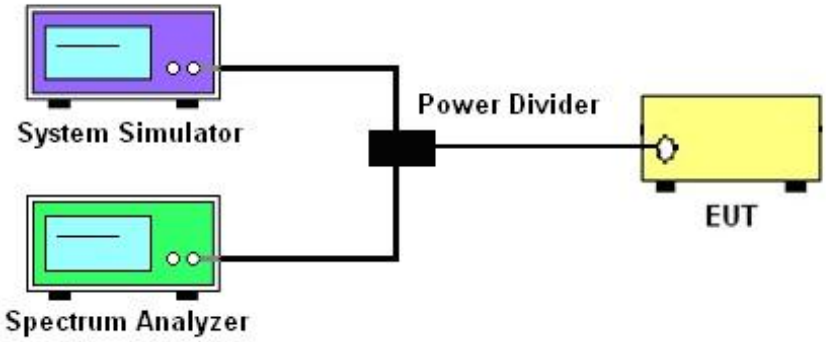

3.5.3. Test Procedures

1.The measurements procedures specified in KDB 971168 D01 -Section 6.0 were applied.
The testing follows ANSI C63.26 Section 5.7. Settings as follows：

2.The EUT was connected to spectrum analyzer and system simulator via a power divider.

3.The RF output of EUT was connected to the spectrum analyzer by RF cable and attenuator. The path loss was compensated to the results for each measurement.

4.The middle channel for the highest RF power within the transmitting frequency was measured.

5.The conducted spurious emission for the whole frequency range was taken.

6.Make the measurement with the spectrum analyzer's RBW = 1MHz, VBW = 3MHz.

7.Set spectrum analyzer with RMS detector.

8.Taking the record of maximum spurious emission.

9.The RF fundamental frequency should be excluded against the limit line in the operating frequency band

10The limit line is derived from 43 + 10log(P)dB below the transmitter power P(Watts)
= P(W)- [43 + 10log(P)] (dB) = [30 + 10log(P)] (dBm) - [43 + 10log(P)] (dB) = -13dBm.

3.5.4. Test Result of Conducted Spurious Emission

Please refer to the Appendix A_Conduction Test data for LTE

3.6. Frequency Stability

3.6.1. Test Setup

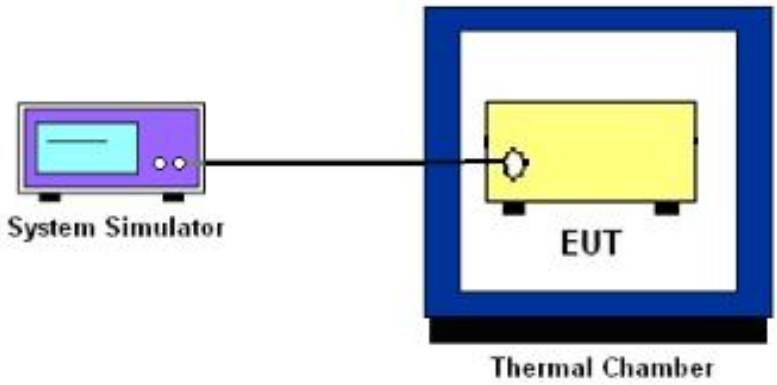

3.6.2. Description of Frequency Stability Measurement

The frequency stability shall be measured by variation of ambient temperature and variation of primary supply voltage to ensure that the fundamental emission stays within the authorized frequency block. The frequency stability of the transmitter shall be maintained within ±0.00025% (±2.5ppm) of the center frequency.

3.6.3. Test Procedures for Temperature Variation

The testing follows ANSI C63.26 section 5.6 as follows:

Frequency Stability Under Temperature Variations:

The equipment under test was connected to an external AC or DC power supply and input rated voltage. RF output was connected to a frequency counter or spectrum analyzer via feed through attenuators. The EUT was placed inside the temperature chamber. Set the spectrum analyzer RBW low enough to obtain the desired frequency resolution and measure EUT 20°C operating frequency as reference frequency. Turn EUT off and set the chamber temperature to highest. After the temperature stabilized for approximately 30 minutes recorded the frequency. Repeat step measure with 10°C decreased per stage until the lowest temperature reached.

Frequency Stability Under Voltage Variations:

Set chamber temperature to 20°C. Use a variable AC power supply /DC power source to power the EUT and set the voltage to rated voltage. Set the spectrum analyzer RBW low enough to obtain the desired frequency resolution and recorded the frequency. Reduce the input voltage to specify extreme voltage variation (±15%) and endpoint, record the maximum frequency change.

3.6.4. Test Result of Frequency Stability

Please refer to the Appendix A_Conduction Test data for LTE

3.7. Radiated Spurious Emission

3.7.1. Test Setup

For radiated test below 30MHz

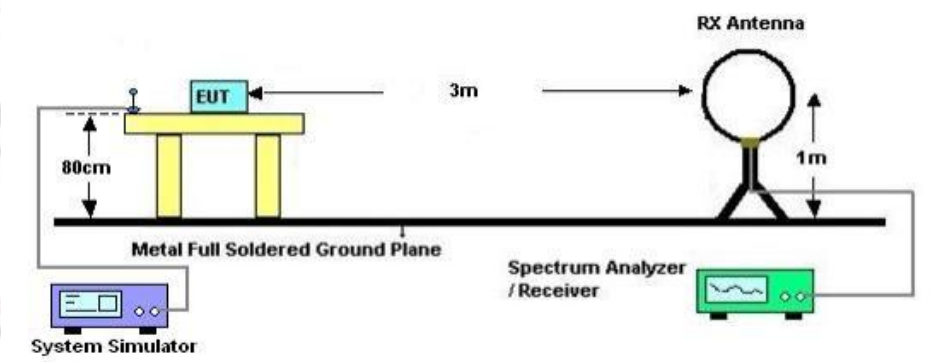

For radiated test from 30MHz to 1GHz

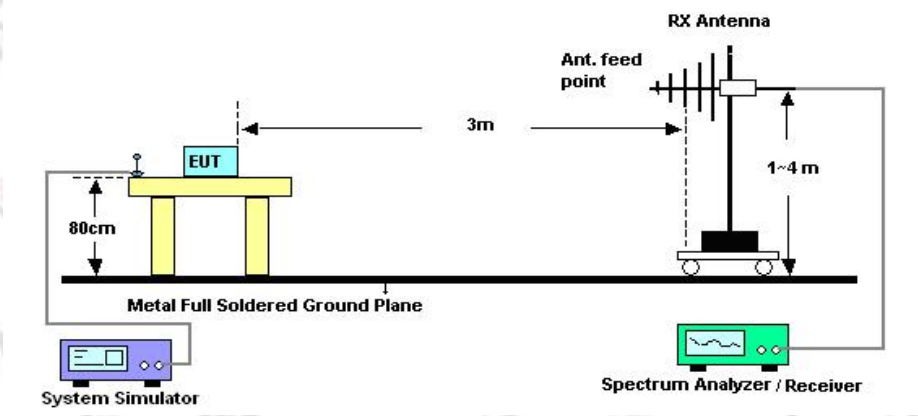

For radiated test above 1GHz

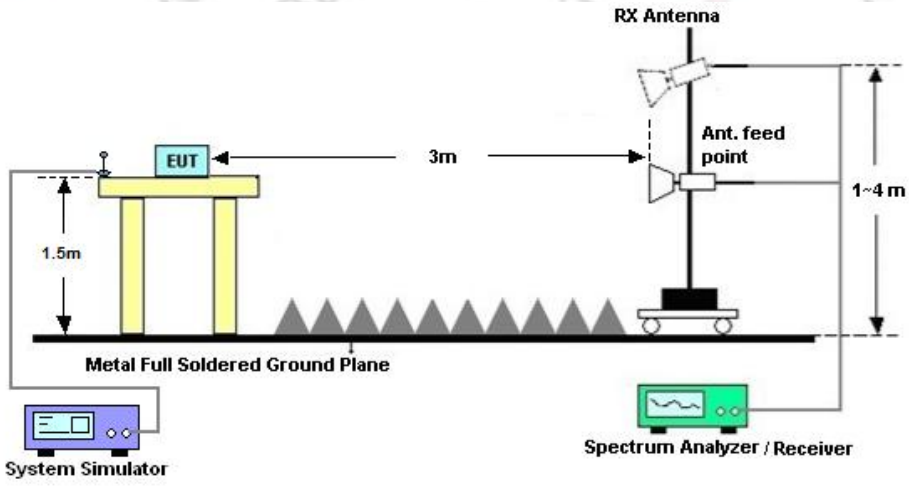

3.7.2. Description of Radiated Spurious Emission

1.The radiated spurious emission was measured by substitution method according to ANSI C63.26.

2.The power of any emission outside of the authorized operating frequency ranges must be attenuated below the transmitter power (P) by a factor of at least 43 + 10 log (P) dB.

3.The spectrum is scanned from 30 MHz up to a frequency including its 10th harmonic.

3.7.3. Test Procedures

The testing follows ANSI C63.26 Section 5.5

1.The testing follows ANSI C63.26 Section 5.5

2.The EUT was placed on a turntable with 0.8 meter height for frequency below 1GHz and 1.5 meter height for frequency above 1GHz respectively above ground.

3.The EUT was set 3 meters from the receiving antenna mounted on the antenna tower.

4.The table was rotated 360 degrees to determine the position of the highest spurious emission.

5.The height of the receiving antenna is varied between 1m to 4m to search the maximum spurious emission for both horizontal and vertical Polarizations.

6.During the measurement, the system simulator parameters were set to force the EUT transmitting at maximum output power.

7.Make the measurement with the spectrum analyzer's RBW = 1MHz, VBW = 3MHz, taking the record of maximum spurious emission.

8.A horn antenna was substituted in place of the EUT and was driven by a signal generator.

9.Tune the output power of signal generator to the same emission level with EUT maximum spurious emission.

10.EIRP (dBm) = S.G. Power – Tx Cable Loss + Tx Antenna Gain

11.ERP (dBm) = EIRP - 2.15

12.The RF fundamental frequency should be excluded against the limit line in the operating frequency band.

The limit line is derived from 43 + 10log(P)dB below the transmitter power P(Watts)

= P(W)- [43 + 10log(P)] (dB)

= [30 + 10log(P)] (dBm) - [43 + 10log(P)] (dB)

= -13dBm.

3.7.4. Test Result of Radiated Spurious Emission

The low frequency, which started from 9 kHz to 30 MHz, was pre-scanned and the result which was 20dB lower than the limit line was not reported.

Radiated spurious emissions - MS allocated a channel：

Please refer to the Appendix B-Radiated Spurious Emission for LTE

4. TEST SETUP PHOTOGRAPHS

Please refer to the Appendix C.

5. EXTERNAL AND INTERNAL PHOTOS OF THE EUT

Please refer to the Appendix D.

※※※※※END OF THE REPORT※※※※※