Original Instructions

LUBA Robotic Lawn Mower

User Manual V1.2

LUBA Robotic Lawn Mower

01

1. Safety and Regulations 03

2. Introduction 10

3. LUBA quick start Installation 21

4. Preparation & Activation 37

5. Basic operation & App interface introduction on main page 44

6. Basic operation & App interface introduction on Map page 48

7. Create a task 55

8. Parameter & Schedule setting and Start Task 62

9. Cutting blades replacement 66

10. Specifications 67

11. Aftersales Policy 68

12. How to Obtain Warranty Service 70

13. Maintenance Guide 72

14. Disclaimers 72

Thank you for choosing MAMMOTION as your garden care lawn mower.
This Quick Start Guide will help you learn and operate MAMMOTION LUBA,
a 4-wheels-drive (4WD) robotic perimeter free lawn mower to cut your lawn grass and maintain your lawn.

1.Safety Instructions

1.1 General safety instructions

● Read the Operator's manual carefully and make sure you understand the instructions before you use the product.

● Never allow children, persons with reduced physical, sensory or mental capabilities or lack of experience and knowledge or people unfamiliar with these instructions to use the machine, local regulations may restrict the age of the operator.

● The product must only be used with the equipment recommended Mammotion Tech. All other types of use are incorrect.

● Do not use the product when persons, especially children, or animals are in the work area.

● To prevent damage to the product and accidents to vehicles and persons, do not install work areas and transport paths across public pathways.
● Do not use the product in areas where persons are not aware of the product.

● Warning signs must be put around the work area of the product if it operates in public areas. The signs must have the text that follows: Warning! Automatic lawn mower! Keep away from the machine! Supervise children!

● Do not run when you operate the product manually with Mammotion App. Always walk, be sure on footing on slopes and make sure to have balance at all times.

● Always wear substantial footwear and long trousers when you operate the product

● Do not touch moving hazardous parts, such as the blade disc, before it has come to a complete stop.

● Set the product to OFF before you clear a blockage, do maintenance or examine the product, and if the product starts to vibrate abnormally. Examine the product for damage before you start the product again. Do not use the product to it is defective.

● If an injury or accident occur get medical aid.

● Do not install the mains cable in an area where the product cuts. Follow the instructions to install the mains cable.

● Do not connect a damaged cable or plug, or touch a damaged cable, before it is disconnected from the power outlet. Disconnect the plug from the power outlet if the cable becomes damaged while in operation. A worn or damaged cable increases the risk of electrical shock. A damaged cable must be replaced by service personnel.

● When you connect the mains cable to the power outlet, use a residual-current device (RCD) with a tripping current of maximum 30 mA.

● Only charge the product in the included charging station. Incorrect use may result in electric shock, overheating or leaking of corrosive liquid from the battery. In the event of leakage of electrolyte, flush with water/neutralizing agent. Get medical aid if corrosive liquid comes in your eyes.

● Use only original batteries recommended by Mammotion Tech. Product safety cannot be guaranteed with other than original batteries. Do not use nonrechargeable batteries.

● Follow the installation instructions that includes to specify the work area, refer to Chapter 3, 7.

● Follow the instructions about to start and operate the product, refer to Chapter 4, 5

2.Introduction

2.1 About MAMMOTION LUBA

MAMMOTION LUBA is a 4-wheels-drive (4WD) robotic lawn mower.

LUBA Series robot lawnmowers feature RTK GNSS navigation and virtual-mapping systems. Those allow users to customize their mowing tasks with different mowing areas and schedules in the Mammotion APP. They provide a picture-perfect lawn maintenance solution with a real hands-free experience.

2.2 Box Contents:

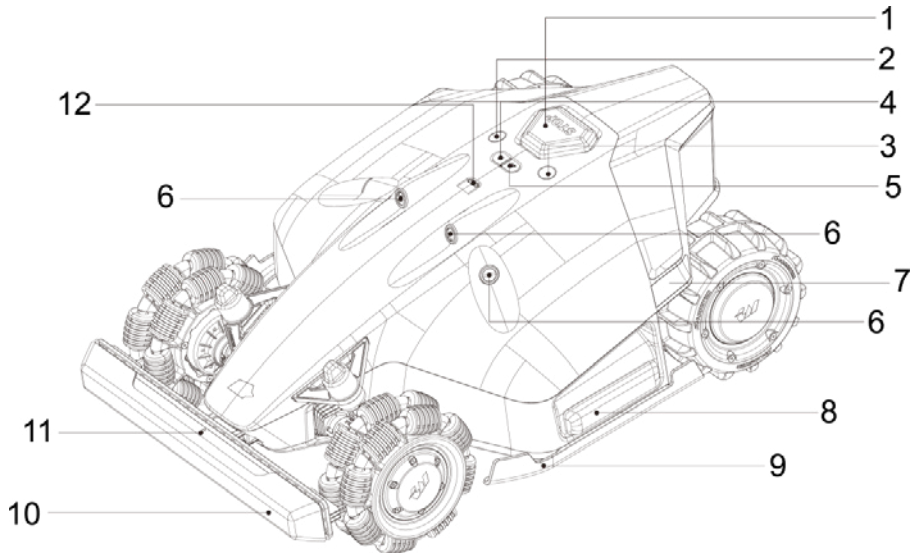

The numbers in the figure represent:

1.Emergency Stop button
2.Start button
3.Power button
4.Auto-return button
5.Continue work button
6.Ultrasonic sensor
7.LED side light
8.Cushion
9.Protecting bracket
10.Front bumper
11.LED indicator on the front bumper
12.Rain sensor

Note:

1. The LED side lights are:
   1) constantly red when working
   2) pulsing flash, when charging & upgrading & sleeping
   3) fast flash if there are any issues (with buzzing)
2. Switch on/off LUBA: long press Power button
3. Continue mission & Unlock LUBA: press Grass cutting button, then press Start button
4. Call back LUBA: press Auto return button, then press Start button

● If there is a risk of thunderstorm, Mammotion Tech recommends that the mains cable to the charging station and the power supply unit to the reference station are disconnected to decrease the risk of damage to electrical components. Connect the mains cable and the power supply again if there is no longer a risk of thunderstorm.

● Follow the maintenance instructions and if necessary use Mammotion Tech original spare parts, refer to Maintenance on Chapter 13.
● For technical data such as weight, dimensions and noise emission values, refer to Technical data on Chapter 9.
● The operator is responsible for accidents or dangers that occurs to other persons or property.
● The product must only be operated, maintained and repaired by persons that are fully conversant with its special characteristics and safety regulations.

● It is not permitted to change the initial design of the product.
● Obey national regulations about electrical safety.

● Operation and storage temperature is 0-50 °C / 32-122 °F. Temperature range for charging is 4-45 °C / 32-113 °F. Too high temperatures might cause damage to the product.

● warning： never operate the machine and/or its peripherals with defective guards or shields,or without safety devices or if the cord is damaged or worn.

● Warning: Do not connect a damaged cord to the supply or touch a damaged cord before it is disconected from the supply for the reason that damaged cords can lead to contact with live parts.

● Note: Keep the power supply and extension cords away from the working area to avoid damage to the cords which can lead to contact with live parts.

1.2 Safety instructions for installation

● Do not install the charging station in an area where there is a risk that persons trip on it.

● Do not install the charging station, including any accessory, at a location that is below, or within 60 cm / 24 in. from, any combustible material. In case of malfunction, heating of the charging station and the power supply may occur and create a potential risk of fire.

● Applicable to USA/Canada. If power supply is installed outdoors: Risk of Electric Shock. Install only to a covered Class A GFCI receptacle (RCD) that has an enclosure that is weatherproof with the attachment plug cap inserted or removed.

● Do not install the charging station where there is a risk of standing water.

1.3 Safety instructions for operation

● Keep your hands and feet away from the rotating blades. Do not put your hands or feet near or below the product when it is set to ON.

● Use the park mode or set the product to OFF when persons, especially children or animals are in the work area.

● Make sure that there are no objects such as stones, branches, tools or toys on the lawn. The blades can be damaged if it hits an object.

● Do not lift the product or move it when it is set to ON.

● Do not to let the product collide with persons or animals. If a person or animal comes in the way of the product, stop the product immediately.

● Do not put objects on top of the product, the charging station or the RTK reference station.

● Do not use the product if the STOP button does not work.

● Always set the product to OFF when it is not in operation.

● Do not use the product at the same time as a pop-up sprinkler. Use the Schedule function so the product and pop-up sprinkler do not operate at the same time.

● Do not put a connection channel where pop-up sprinklers are installed.

● Do not let the product operate when there is standing water in the work area. For example when heavy rain forms pools of water

1.4 Safety instructions for maintenance

Set the product to OFF when you do maintenance on the product.

Do not use a high-pressure washer to clean the product. Do not use solvents to clean the product.

Disconnect the plug to the charging station or remove the disabling device before you clean or do maintenance of the charging station.

LUBA is water resistant, but it is not waterproof. Both LUBA and the RTK station have a water-resistance rating of IPX6 under the IEC/EN60529 standard and have been certified by TUV.

LUBA is designed to meet the installation, setting, and use requirements for heavy rain or storms when placed outdoors in a positive placement configuration. However, it is not recommended to place LUBA in low-lying areas or in puddles, as these conditions may pose a risk to the device's functionality.

When cleaning your LUBA, please keep the following precautions in mind:
Use a brush or a water hose for cleaning, but avoid using a high-pressure washer, as it may cause damage to the device.

It is recommended to divide the cleaning process into separate areas: positive static cleaning surface, side cleaning, and vertical cleaning chassis.

After washing, ensure that LUBA is placed on the ground in its normal orientation and not upside down.

Do not reverse the LUBA to clean the chassis, and if you do reverse it for cleaning purposes, make sure to revert it back to its proper orientation afterward. This precaution is necessary to prevent water from seeping into the motor and potentially affecting the normal operation of LUBA.

By following these guidelines, you can effectively clean your LUBA without compromising its water resistance and functionality.

1.5 Battery safety

Lithium-ion batteries can explode or cause fire if disassembled, short-circuited, exposed to water, fire, or high temperatures. Handle carefully, do not dismantle, open the battery or use any type of electrical/mechanical abuse. Avoid storage in direct sunlight.

1.6 Symbols on the product

These symbols can be found on the product. Study them carefully.

Warning

Read user instructions before operating the machine.

Read user instructions before operating the machine.

This product complies with the applicable EU Directives.

This product complies with the applicable UK Directives.

Made in China

This product is manufactured in China

It is not permitted to dispose this product as normal household waste. Ensure that the product is recycled in accordance with local legal requirements.

The recycling symbol shows that the item can be recycled

Keep the pack of this product dry

The pack of this product should not be covered

Prohibit flipping

This product is fragile articles

The pack of this product / the product should not be tread

Symbols on the battery

It is not permitted to dispose this product as normal household waste. Ensure that the product is recycled in accordance with local legal requirements.

UK CA

This product complies with the applicable UK Directives.

CE

This product complies with the applicable EU Directives.

Made in China

This product is manufactured in China

c RU US

This product meets Canadian and U.S. safety standards.

Class III appliance.

Do not ride on the machine.

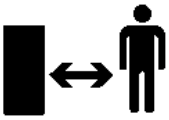

Keep a safe distance from your machine when operating.

LUBA Robotic Mower Quick Reference Chart 1

Status	LED side light	LED indicator on the front bumper
LUBA sleeping or "Pause" on App clicked	Off	Green on
Working (manual control and automatic working)	From local time 8:00-18:00 green on from local time 18:00-8 00 off user can manully switch it constant on /off	Green on
Upgrading	Pulsing Red	Green on
LUBA with issue/defect (contains hard ware/software issue)	Very fast red flash	Green on
Upgrading failed	Very fast red flash	Green on
STOP button triggered/get stuck /extrication failed/lift sensor triggered /slope out of threshold	Pulsing Red(once per second)	Green on
Undirected/Position status not OK/ No satellite signal found	Pulsing Red(once per second)	Green on

LUBA Robotic Mower Quick Reference Chart 2

Long press (5s)	Power on/off LUBA
Press STOP	Stop and lock LUBA
First press then press START	Unlock LUBA and continue work
First press then press START	Unlock LUBA and return to charging station

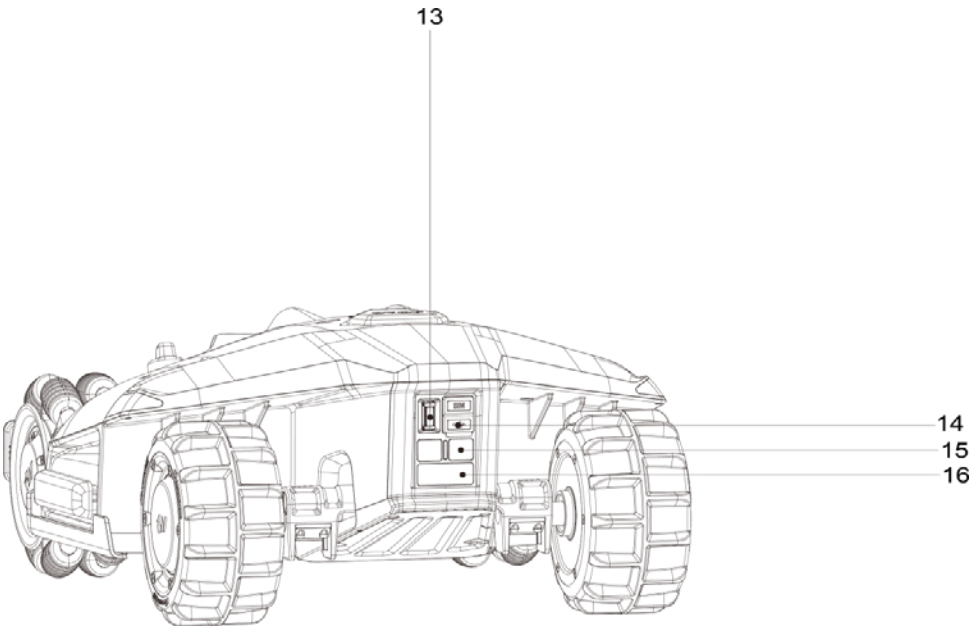

The numbers in the figure represent:

13.Secure key
14.USB port
15.Charging port on LUBA
16.Infrared receiver

Note:

If in the returning home process, STOP is pressed and LUBA is locked, please First press then START to continue Auto-returning.

USB port is reserved for trouble shooting and debugging.

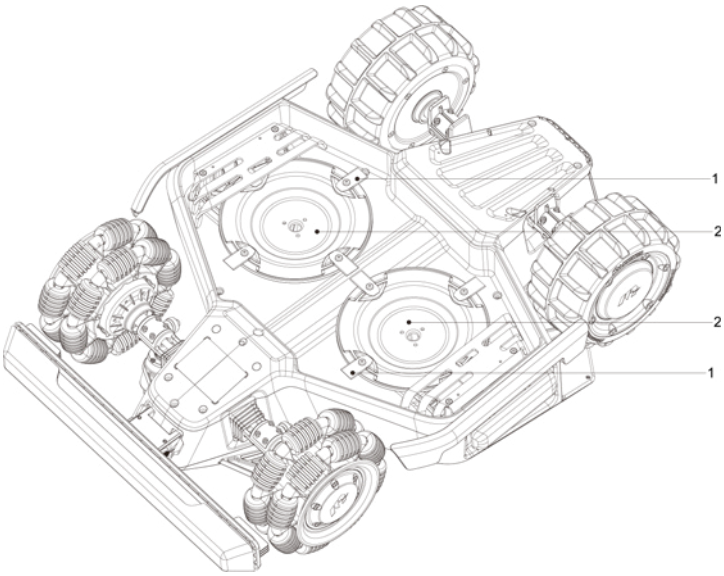

The numbers in the figure represent:

1. Cutting blade*8
2. Blade disk*2

2.3 Charging Station Product Overview

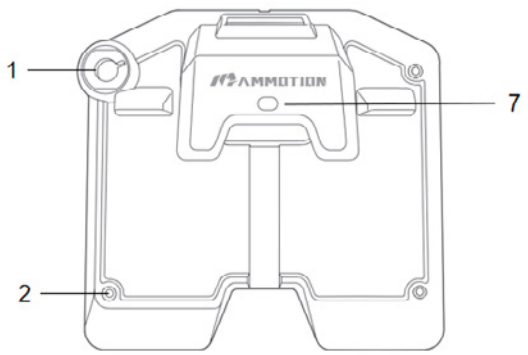

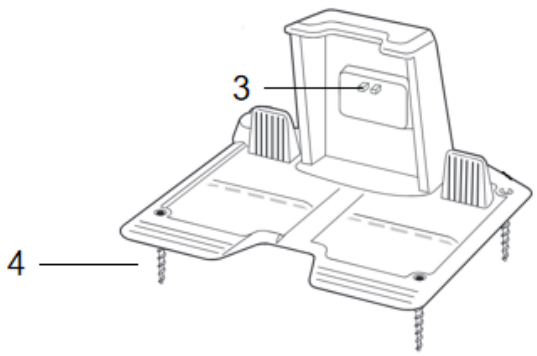

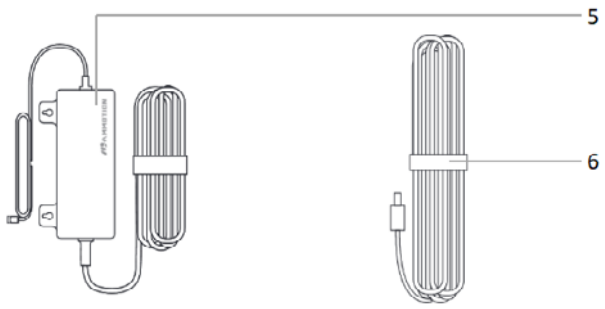

The numbers in the figure represent:

1.Mounting hole for RTK base pole
2.Mounting holes*3
3.Charging pin on charging station
4.Screws*3
5.Power adaptor
6.Extension wire（10meters）
7.LED light of charging station

Charging Station Quick Reference Chart

Status	LED on RTK reference station
Reference station initializing (searching satellites)	green flash
Normal operation	from local time 8:00-18:00 green constant on from local time 18:00-8:00 off
Reference station defect & no satellite signal for long time	constant red on
Reference station upgrading	blue flash

2.4 RTK Reference Station

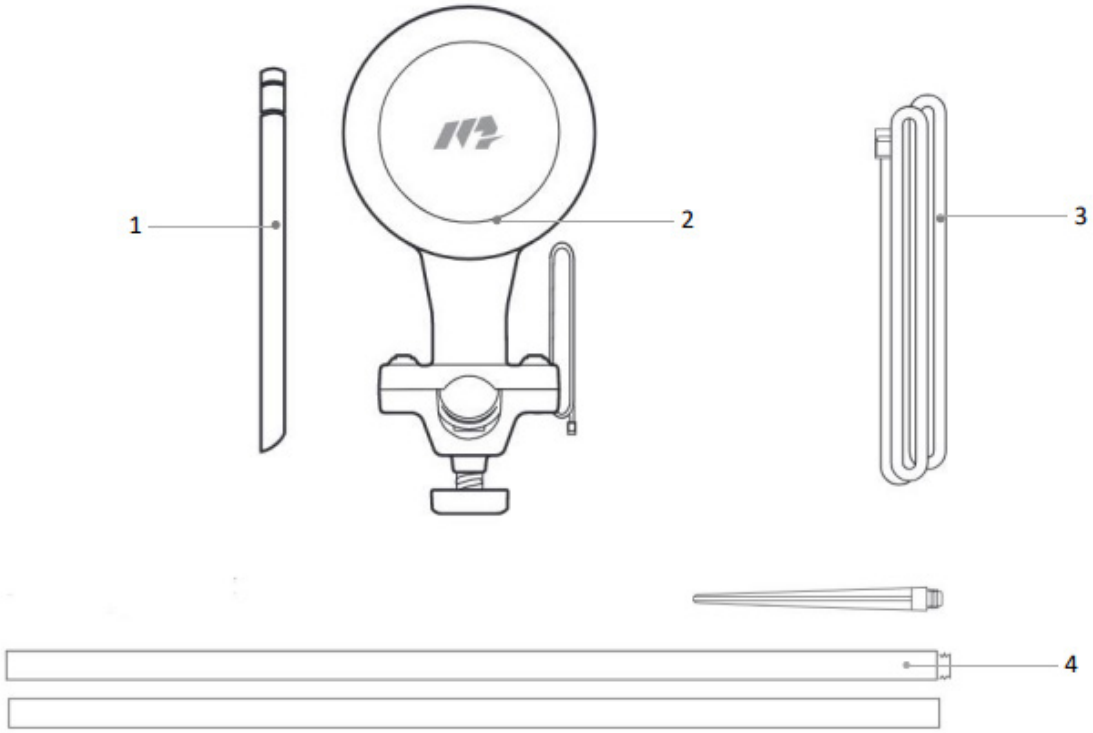

1.Radio Antenna
2.RTK Reference Station
3.Wire（2.5 meter or 8.2 feet）
4.Mounting pole

Charging Station Quick Reference Chart

Status	LED on RTK reference station
Reference station initializing (searching satellites)	green flash
Work properly	from local time 8:00-18:00 green constant on from local time 18:00-8:00 off
Reference station defect & no satellite signal for long time	constant red on
Reference station upgrading	blue flash

2.5 Other accessories

LUBA garage:

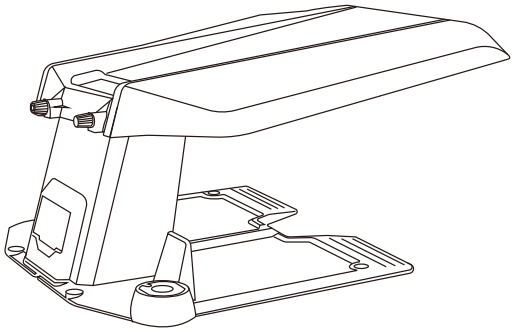

LUBA RTK reference station wall installation kit:

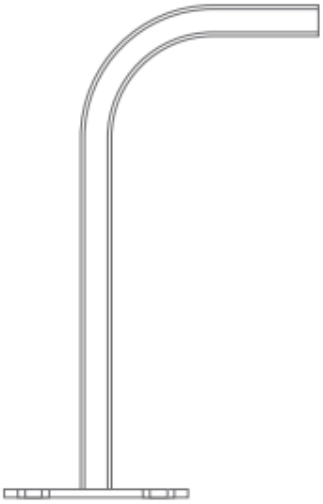

① L-shaped mounting rod

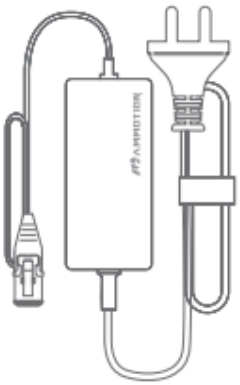

② RTK power adapter

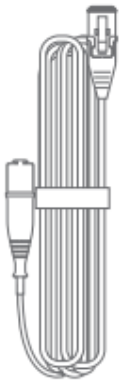

③ RTK extension cord 10M

④ Expansion screw

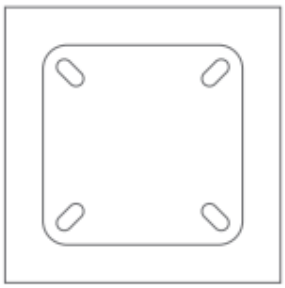

⑤ Drilling position indication sticker

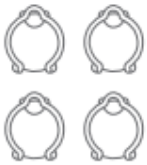

⑥ Cord tie

2.6 How LUBA's positioning and dynamic system works:

LUBA uses RTK and Multi-Sensor Integrated Navigation System to navigate. RTK is a satellite navigation system that significantly improves device positioning to an accuracy of less than 5 cm (approx. 2 inches). With access to all 4 global navigation systems (GPS, GLONASS, BEIDOU, and Galileo) and additional sensors, LUBA's strong satellite signal provides nearly 100x greater accuracy than traditional GPS systems. The advanced RTK system enables precise positioning for LUBA to within 5 cm (approx.2 inches) of accuracy, without the need to install cumbersome boundary and perimeter wires.

About RTK:

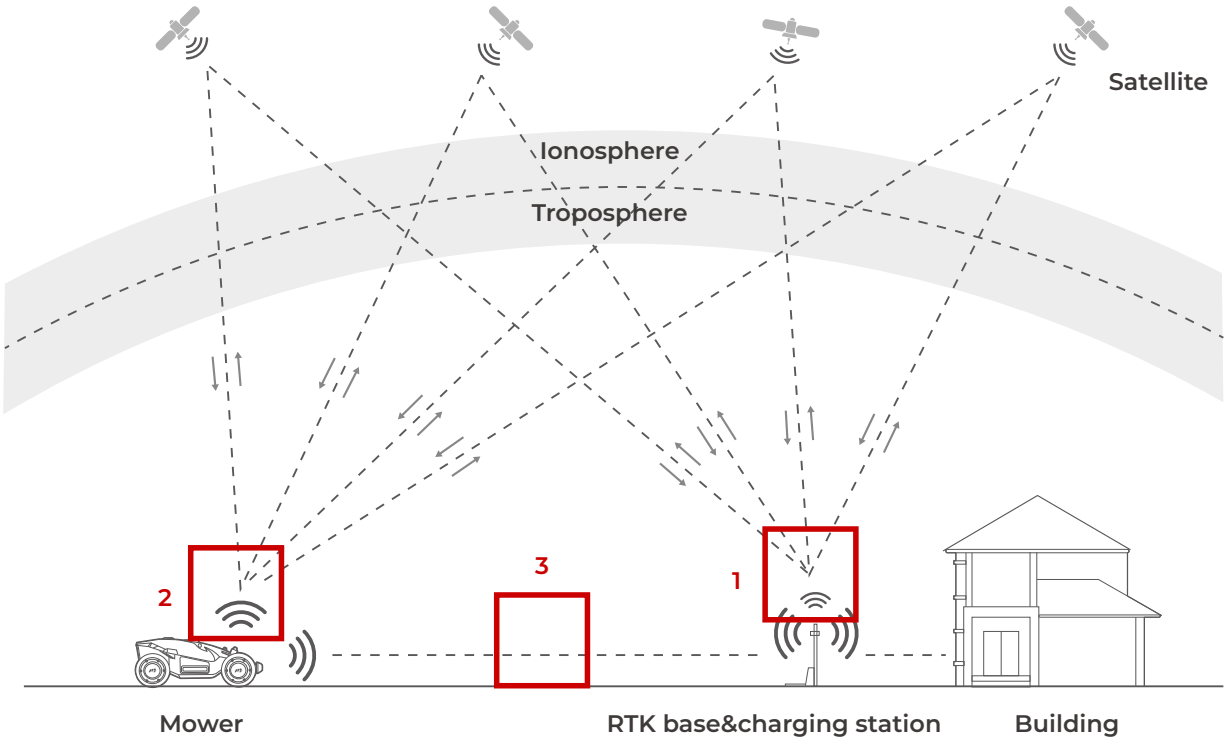

The RTK system of LUBA uses a full frequency multiple satellite-based system(GPS, BEIDOU, GLONASS and Galileo), which improves the positioning accuracy to approximately 5 cm (approx.2 inches). However, the accuracy crucially relies on the Global Navigation Satellite System(GNSS) signal. There are 3 things that can determine the performance of LUBA's positioning:

1.The RTK Reference Station must receive enough satellite signals from the satellites in the sky, which means being positioned in a location where the signals from the sky are not obstructed,as "1" shown in the image.

2.LUBA must also receive enough satellite signals from the satellites in the sky,which again means the signals from the sky to LUBA are not obstructed,as "2" shown in the figure.

3.The data can be transmitted from RTK Reference Station to LUBA. As "3" shown in the figure. This does not mean there should always be a line-of-sight view from each point of your lawn to the RTK reference station. Our radio transmission ability allows the data transmission to also work as long as the transmission path is not fully obstructed.

In general, there are 3 factors that can weaken the performance of LUBA positioning system:

Factor 1: Satellite Signal to RTK Reference Station Blocked:

If there are any objects on or surrounding the antenna of the RTK reference station, charging station and/or the mower, the signal will be weakened or blocked.
Solution:
1.The distance between the RTK Reference Station and any obstacle (wall, roof, tree, etc.) ideally should be at least the same as the height of the obstacle, as shown below.

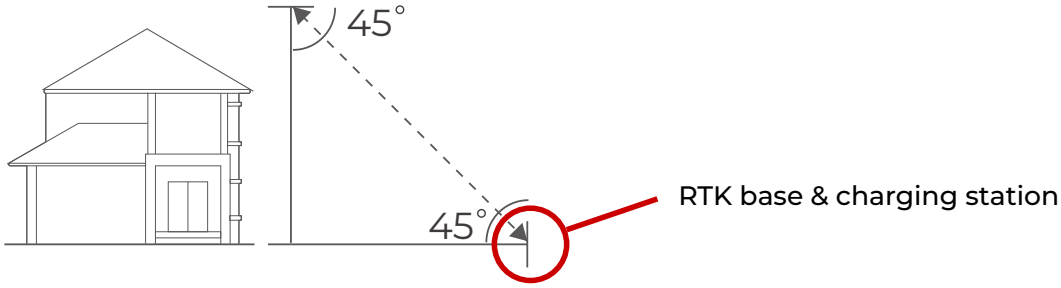

Height of the building or obstacle	Distance between the RTK base and the building or obstacle
1m	>1m
2m	>2m
3m	>3m
4m	>4m

2.Set the RTK Reference station on the wall or roof to give an open-sky area. As shown below.

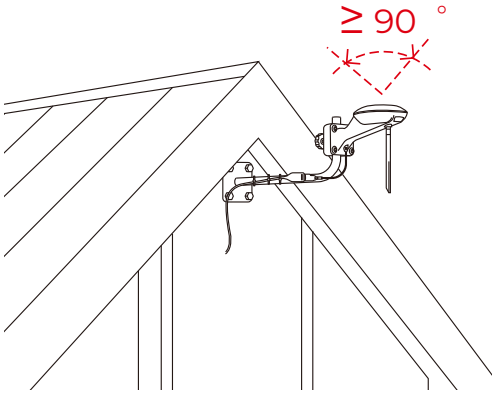

Factor 2: Satellite Signal to LUBA Blocked

If LUBA itself is badly sheltered, the positioning system will also be weakened.

Solution:

1. We do not recommend you drive LUBA into a “U”-shaped or “L -shaped corner with high walls, under large trees or under large eaves, each of which will strongly weaken the satellite signal received by LUBA from the sky. We advise that you try to keep these parts out of the task area or place them in a no go zone.

2.If these corners or high walls exist in your lawn, please keep LUBA at least 15 cm (approx. 6 inches) away from them.

Factor 3: Transmission Path Blocking

If the transmission path for radio signals from the RTK Reference Station to LUBA is fully obstructed by large metal or concrete walls, LUBA will could not receive the data from the RTK Reference station and so will not be able to position with cm level accuracy.

Solution：
1.The communication transmission power gets weakened with long distance. Please make sure that the distance between the boundary of the map and the reference station is less than 80 m (262 ft).

2.Make sure that at the initialization, when LUBA is at the charging station position you set, the positioning status is “fine” (this will be auto-checked when initializing)

3.The figure below shows recommended positions for the RTK Reference Station, indicated by the red triangle.If your lawn is “O”-shaped, “U” shaped, or you have multiple lawns, we recommend you set the RTK Reference Station at a higher point, such as on the roof. This can be done using the wall installation kit. If your lawn is “L”-shaped, you can set the reference station either on the roof or at the corner point as shown below.

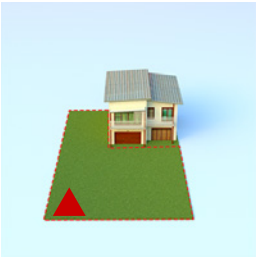

L-shape

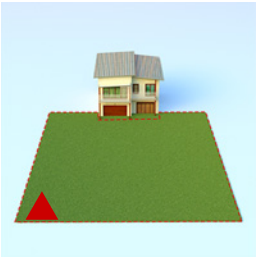

On one side

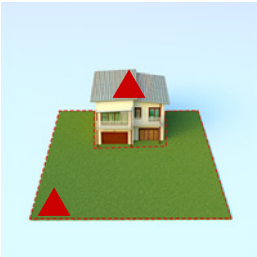

U-shape

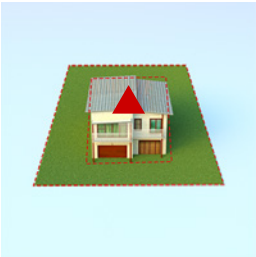

O-shape

Multiple lawns

But does this mean there are too many limitations for LUBA to be useful? This is not the case, and on our website you can find many examples of set-ups, videos and recommendations to assist you in determining if your lawn is suitable for LUBA, and how to set up LUBA to work efficiently.

Also, the Mammotion App and LUBA system will automatically check the positioning quality, and check if the initialization and task setting is OK or not. If not, the App will provide information on how to modify the your settings to let LUBA work properly.

About Multi-Sensor Integrated Navigation System:

In addition to using satellites, LUBA's Multi-Sensor Integrated Navigation System also enhances the reliability and robustness of LUBA's positioning status. This system comprises an Inertial Measurement Unit (IMU), odometer, and other ultrasonic sensors. This means that even in partly sheltered areas, thanks to this strong additional positioning algorithm, LUBA can work properly.

About Auto-Recharging :

The auto recharging system of LUBA contains 2 parts; one is integrated navigation system, the other is the infrared sensor.

During initialization of LUBA, the position of the charging station is set in the local navigation system. As shown below, LUBA is at the charging station, and the position of the charging station is indicated the map, The area shown with blue lines is defined as the "recharging area", which means that in this area LUBA can move to dock with the charging station and perform auto recharging by means of the infrared sensor in this area only, no integrated navigation system will be used.

However, if LUBA is outside this area, in order to auto -recharge LUBA needs to :

First, go back from its current place to the "recharging area" via the predefined map (task area and connection path) and integrated navigation system.

Second, return to the charging station itself, guided by the infrared sensor.

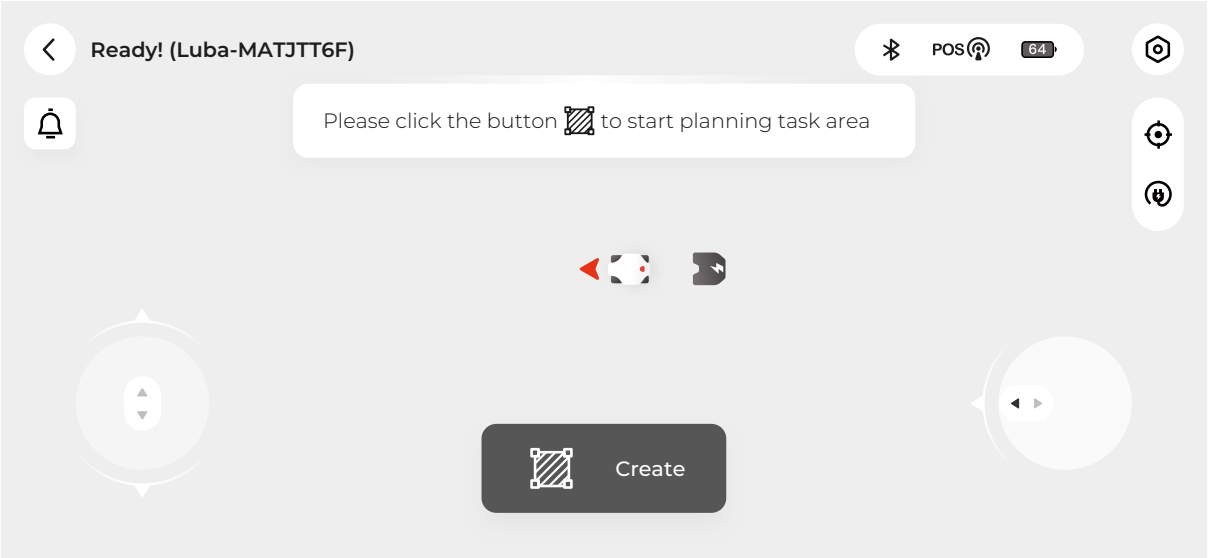

So, to set LUBA on the charging station to recharge, there are 3 methods:

1.Manually move LUBA to the charging station, with the rear of LUBA facing the charging station and the charging port on LUBA properly set to align with the pins on the charging station

2.Put/drive LUBA about 1.5-2 m (5-6.5 ft) in front of the charging station, with the rear of LUBA facing the charging station. Press the power button of LUBA to power LUBA on. Next press then press START to direct LUBA back to the charging station. As the infrared sensor system is used, you can still do this even in indoor areas where there is no satellite signal and LUBA cannot do the navigation.

3.If a task area is already set and is connected to the charging station by a connection path or if the "recharging area" is immediately next to the task area, you can call back LUBA by pressing then START on the mower or by pressing on the App. LUBA will itself then find the right way itself to first return to the charging area and align the rear of the mower to face the charging station. It will then back into the charging station and do the recharge automatically.

If LUBA is not in the task area or on the connection path, you first need to first drive LUBA into the task area or onto the connection path. Then press then START or on App.

Alternatively, you can manually drive LUBA to the "recharging area" (about 1.5-2 m or 5-6.5 ft in front of the charging station), and then press then START . Note that if while doing the recharging process, LUBA is blocked or "STOP" is triggered, it is necessary to press then START , not .

About Perception:
The perception system of LUBA contains 2 parts: 4 ultrasonic sensors and the front bumper. These are used to avoid obstacles in the mowing path.

Perception logic/ Bypass strategy:
All the perception logic is for the obstacles that are not defined as part of a "no go zone". If the area of obstacle is predefined as a "no go zone", the cutting route will not contain this area. Adding permanent obstacles to defined "no go zone" is more friendly for lawn care as the cutting route is then pre-planned to avoid them and i recommended.

The following modes can be selected:

Off: The ultrasonic sensors are switched off when in this mode, and only the front bumper is active to detect collisions. If the front bumper is triggered by a collision, LUBA will go backwards for about 10 cm (approx. 4 inches), then turn and bypass the obstacle.

This mode should only be used in areas where the grass is shorter than 15 cm (approx. 6 inches). Grass taller than this can lead to very frequent triggering of the ultrasonic sensors, which would then result in LUBA taking frequent evasive actions.

Level 1: In this mode, when the ultrasonic sensors detect something, LUBA will slow down to about 0.05 m/s (2 inch/sec) and continue moving forwards and cutting. Once the front bumper is triggered, LUBA will go backwards for about 10 cm (approx. 4 inches), then turn and bypass the obstacle.

The ultrasonic sensors, when triggered, are therefore used to minimize the impact speed of LUBA by slowing it down. Should a genuine obstacle be present, the front bumper will be gently triggered and is therefore used to determine whether the "obstacle" really exists. If the "obstacle" is just a patch of high grass, the front bumper will not be triggered and LUBA will continue working.

This mode is quite useful for lawns that have regions of high grass and/or grass is not that smooth.

Level 2: In this mode, when the ultrasonic sensors detect something, LUBA will go backwards for about 10 cm (approx. 4 inches), then turn and bypass the obstacle.

The advantage of this mode is that LUBA does not touch the obstacle and will turn around once something is detected. The disadvantage is that even very small regions of grass higher than 7 cm (approx. 2.75 inches) have the potential to be detected and recognized as an "obstacle" and as a result that small region will not be cut because LUBA will bypass it.

This mode is quite useful for flat lawns with grass mainly lower than 7 cm (approx. 2.75 inches).

Perception mode	Ultrasonic sensors	Front bumper	Area of application
Off	OFF	Once triggered, LUBA will go backwards,then turn and bypass the obstacle	Should be only used in areas where the grass is nearly all high higher than 15cm which can lead to nearly constant disturb to ultrasonic sensors
Level 1	Slow down LUBA	The same as level 0	Useful for lawn, which is partly with high grass and the grass is not that smoot
Level 2	Once detect something,LUBA will go backwards, then turn and bypass the obstacle	The same as level 0	Useful for flat lawn with grass mainly lower than 7cm

3. LUBA quick start Installation

Note:

1.Read and understand the safety chapter before you install the product.
2.Use original spare parts and installation material.

General preparations

1.Water filled holes in the lawn can cause damage to the product.
2.Sketch the layout of your house and lawn and take note of any obstacles. This makes it easier to examine where to put the charging station, the reference station, and set up the virtual boundaries.
3.Decide where to install the charging station, the RTK reference station, the transport paths and the virtual boundaries for the work areas and no-go zones.
4.Fill in any large holes in the lawn.

3.1 Find a Good Spot to install RTK Reference Station

As shown in chapter 2.2 “About RTK”, the RTK Reference Station should be set in a suitable place:

1.The distance between the RTK Reference Station and any walls, roofs, and trees should be ideally at least the same as the height of the wall / roof / tree, as shown below.

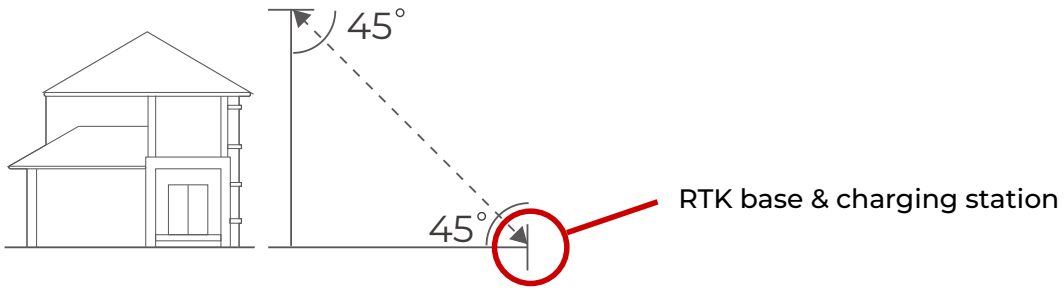

Height of the building or obstacle	Distance between the RTK base and the building or obstacle
1m	>1m
2m	>2m
3m	>3m
4m	>4m

Alternatively, set the RTK Reference station on a wall or roof that has an open-sky view. As shown below.

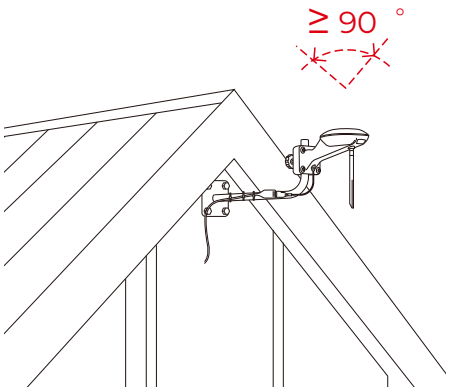

2.Ensure that the RTK reference station is at least 5 m (approx. 16.5 feet) away from any large glass walls or large metal objects, such as a wall made of iron sheet.
3.The RTK Reference station should be oriented vertically. As shown below.

4.If there are tall trees with large crowns, you should set the RTK reference station in the lawn as shown below. The distance to the reference station should be at least the same as the height of the tree to the edge of the crown.

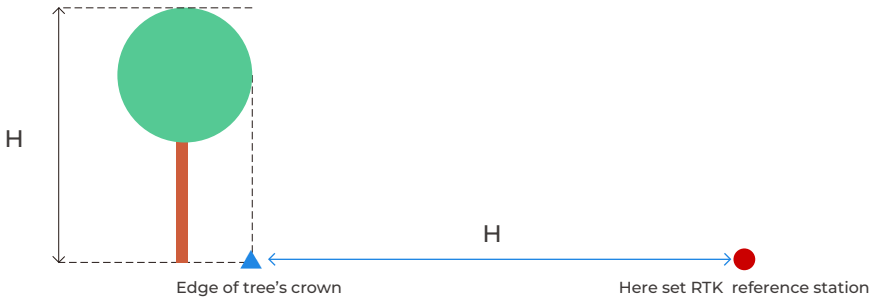

5.If your lawn is an "O"-shape, "U" shape, or if there are multiple lawns, we recommend you set the RTK reference station in a higher place, such as on the roof. If your lawn has an "L"-shape, you can set the reference station on the roof or at the end of the lawn as shown below.

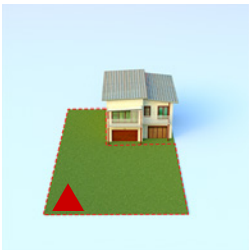
L-shape

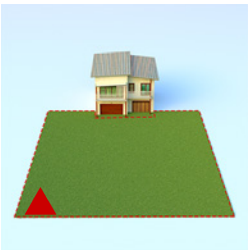
On one side

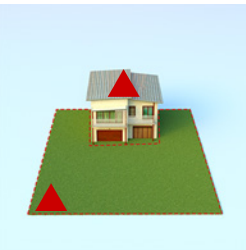
U-shape

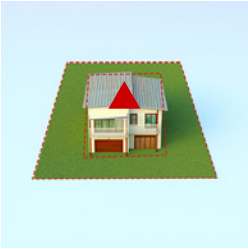
O-shape

Multiple lawns

If your Lawn is an "O"-shape, "U" shape , or you have separate lawns, we recommend that you to set the RTK reference station at a high point on a wall or a roof, using the with wall installation kit that is available as an accessory.

Correct RTK reference station settings:

1. Open-sky area on the lawn, at least 3 m (approx. 10 feet) from the wall.

2. Set on the roof or high on a wall with open-sky area (typically for lawns with “O”-shape, “U” shape, or with separate lawns).
3. Away from metal or glass walls

Wrong RTK reference station settings:

1. Under a roof or trees

2. Very close to the wall
3. At an “L” shaped corner

4. in the middle of multiple obstacles (such as two walls, a wall and a tree etc.)

5.Totally separate from the lawn
6.Too far away (more than 80 m or 262 ft) from the edge of lawn

3.2 Find a Good Place to set Charging Station

As shown in chapter 2.2 “About Auto-Recharging”, the charging station should be set in a place where:

1. The charging station (A) is near the docking point (B) and has an open-sky view. This means that 90°of the sky in all directions must be unblocked. The charging station docking point (B) is 2 m or 6.5 ft. in front of the charging station.

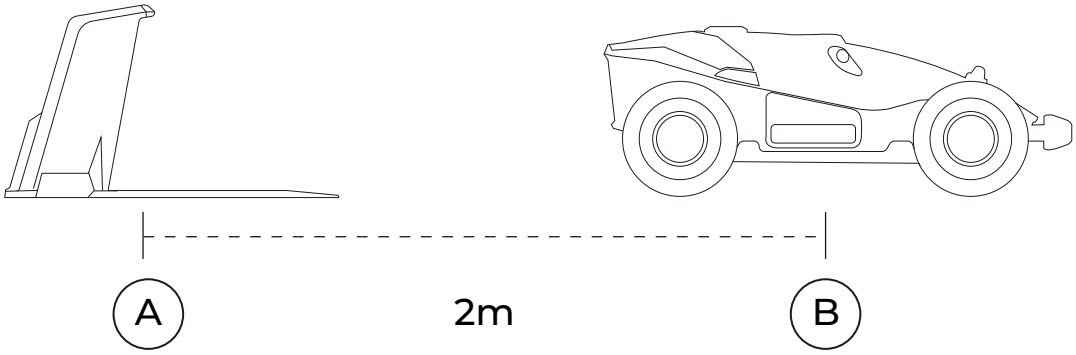

2. No obstacle or other items should be between A and B
3. When set on the ground, the charging plate must not be bent or tilted, or with grass taller than 5 cm (approx. 2 inches) below the charging plate. Both the area of charging station and the “recharging area” should be on flat ground. After LUBA is positioned on the charging station, the plate should not be bent.

Correct charging station settings:

The place to set charging station should be flat and solid, also the “recharging area” (about 2 m or 6.5 ft in front of the charging station) should also be flat and solid. The grass should be short.

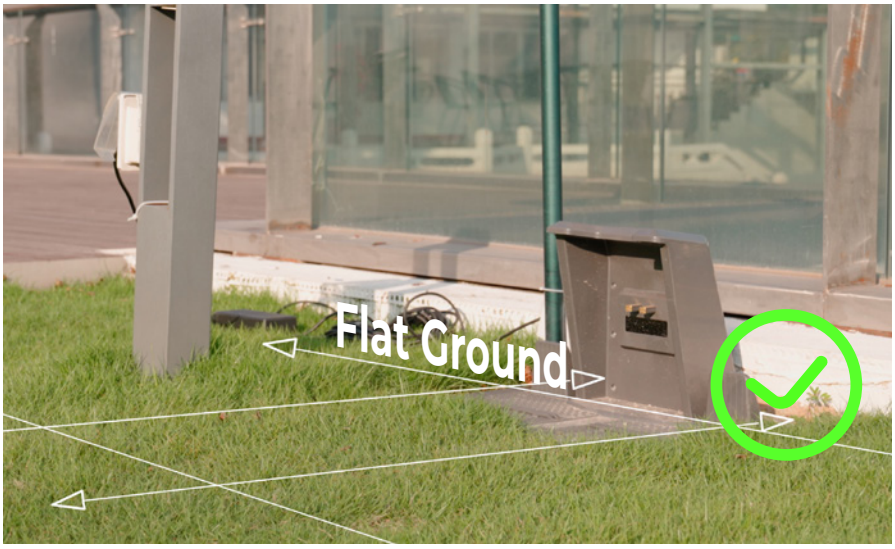

Wrong charging station settings:

1.Setting charging station on a slope

2.Thick grass which causes the charging station to bend when a heavy object, such as LUBA, is on it.

3.3 The RTK base is installed on the charging station

If the reference station is set on the charging station, the settings should be as follows:

Correct settings:
1. Open sky area.

2. One side beside a wall. Only one direction is obscured by the wall, other directions are totally free

Overview of the installation when it's completed:

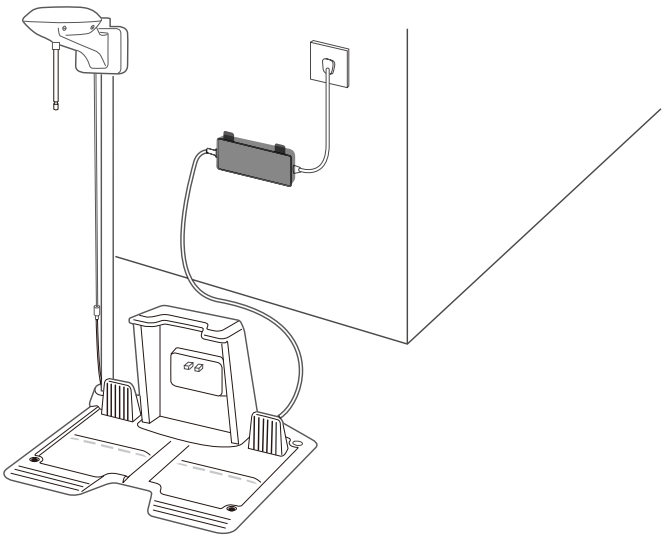

Installation Kit:

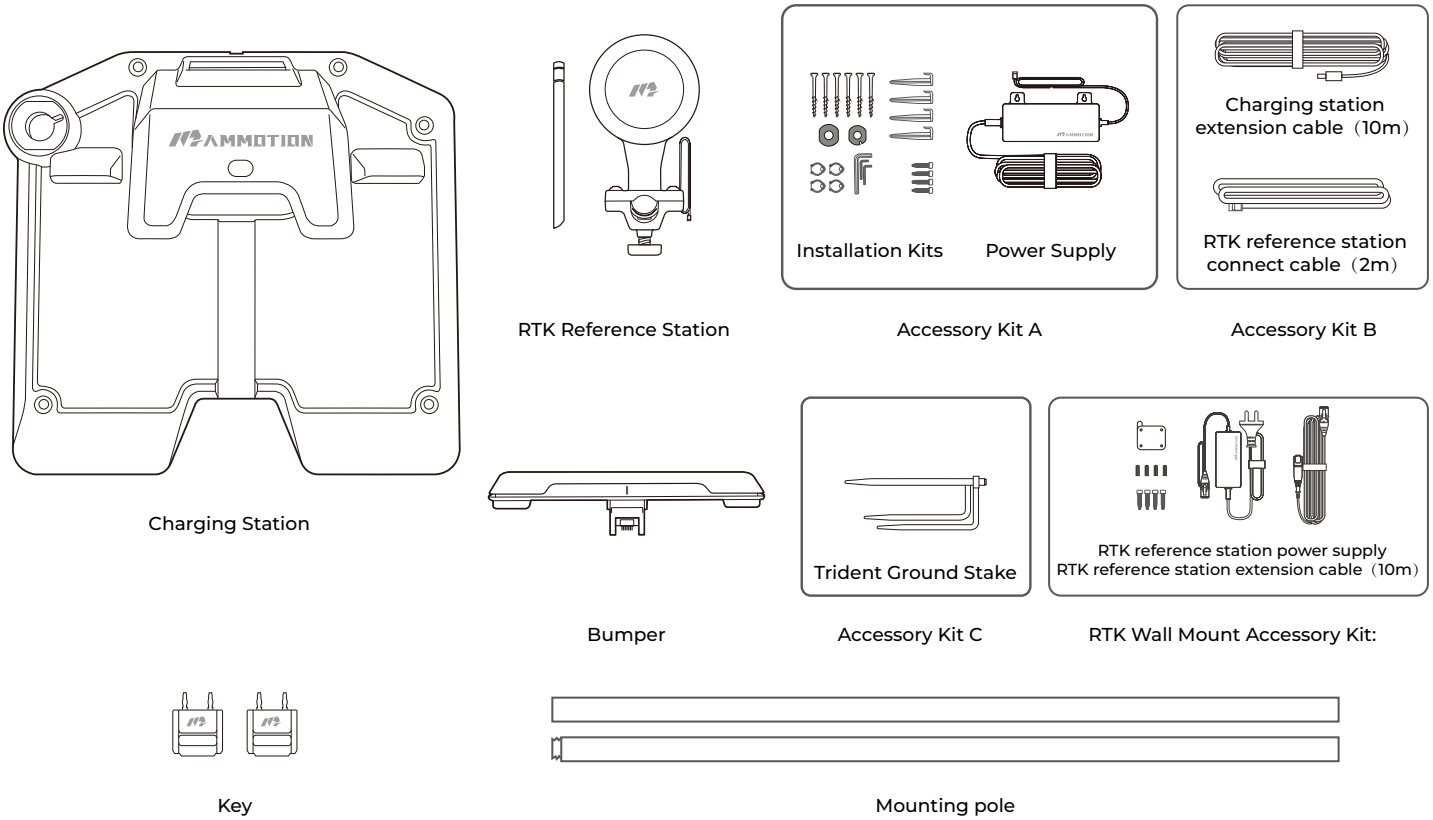

Installation Process:

1. Put the 2 m (approx. 6.5 feet) RTK extension cord from point A to point B, then install the line connector at the interface B behind the charging station.

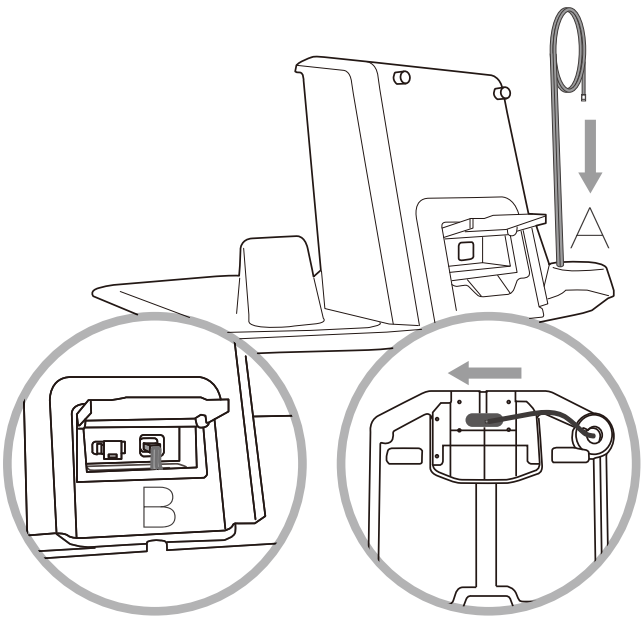

2. Screw the 10 m (approx. 33 feet) power supply extension cord into the interface C of the charging station.

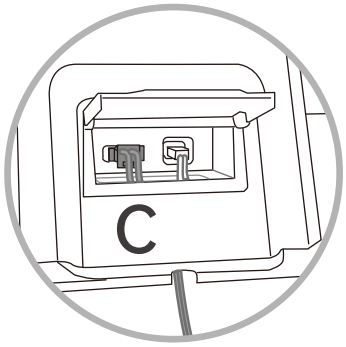

3. As shown in the figure, screw the two metal rods together, and then screw on the trident ground stake.

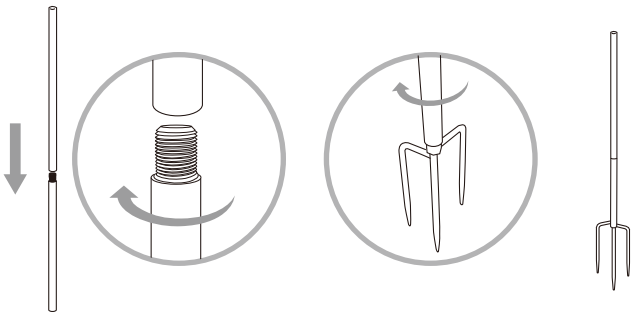

4. Fix the charging station on a flat solid ground with the fixing screws. Insert and fix the trident ground stake as shown in the figure and keep the metal rod upright.

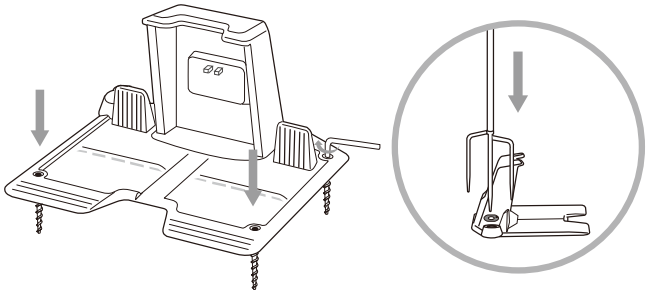

5. Install the RTK antenna with four screws on the metal pole. The height of RTK antenna can be adjusted as shown in the figure.

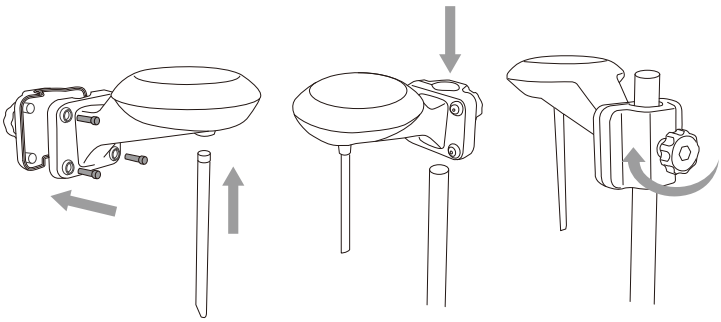

6. Connect the 2 m (approx. 6.5 feet) RTK extension cord to the RTK antenna reference station cable.

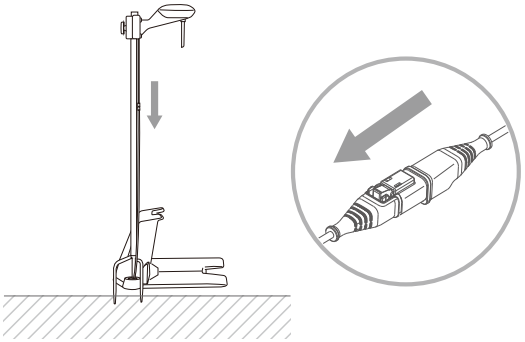

7. Connect the 10 m (approx. 33 feet) power supply extension cord with power plug and insert the power plug into an electrical outlet.

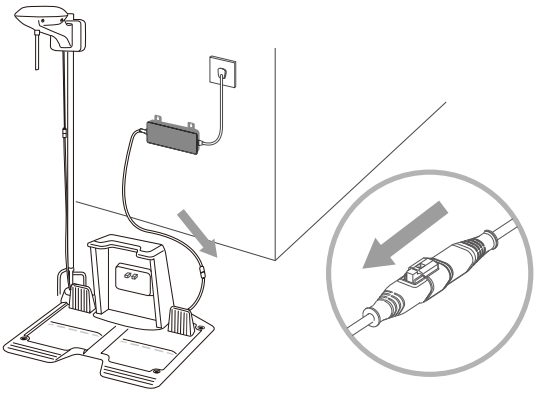

8. Check if the LED on the charging station is green. If it turns green, then this indicates correct operation. If it turns red, please pull out the power plug and repeat.
9. Check the LED on the RTK antenna. It should be flashing green, please wait until the LED on the RTK antenna is constant green (this will take several minutes).

3.4 RTK reference station is installed separately from the charging station & on the roof/wall

It is also possible to site the RTK reference station in a separate location to the charging station.

Correct settings:

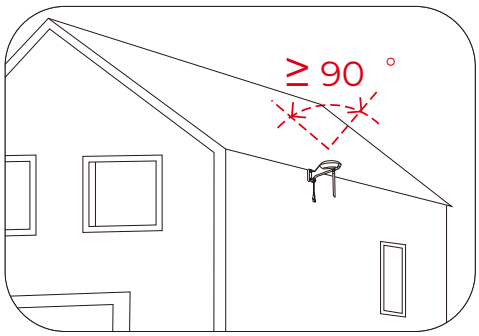

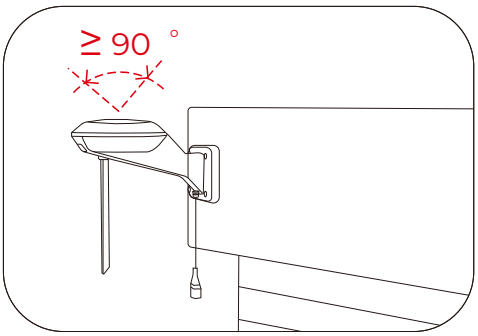

Wrong settings:

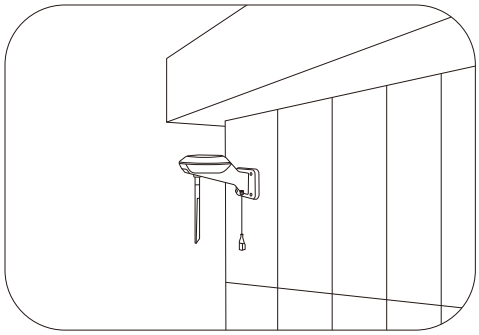

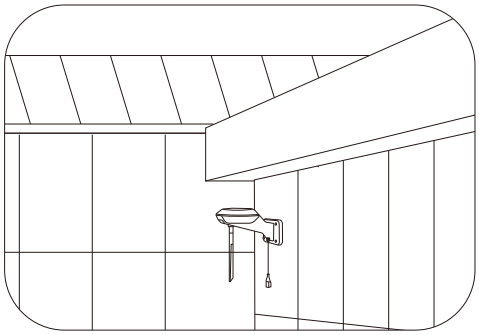

Overview of the installation when it's completed.

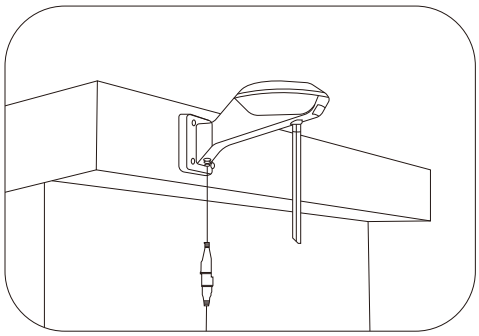

RTK Wall Mount Kit:

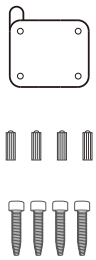

RTK Wall Mount Accessory

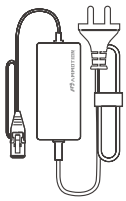

RTK reference station power supply

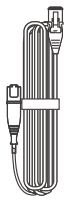

RTK reference station extension cable（10m）

Installation Process:

1. Choose a suitable installation area at a high place of your house.
2. Stick the sticker on the wall indicating the position of the drilling holes and drill the holes（8mm） at the appropriate position.

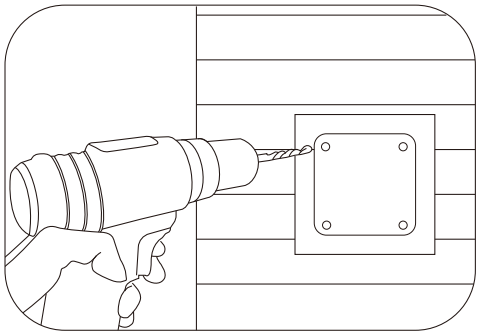

3.Install the expansion screws in the drilled holes.

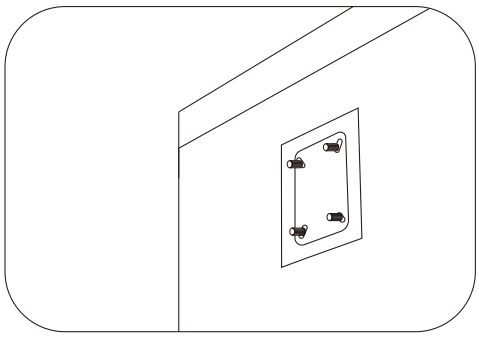

4.Fix the RTK Reference Station on the sticker and tighten the screws.

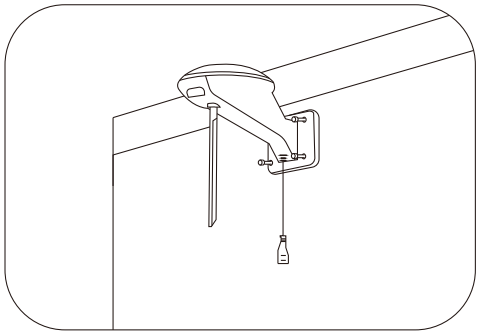

5.Connect the end of the RTK Reference Station extension cable (10m) to the RTK reference station and connect the other end of the RTK Reference Station extension cable (10m) to the RTK power supply and turn on the power.

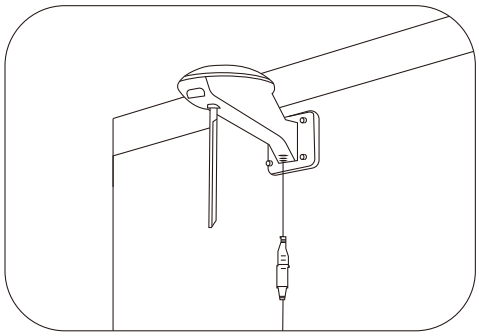

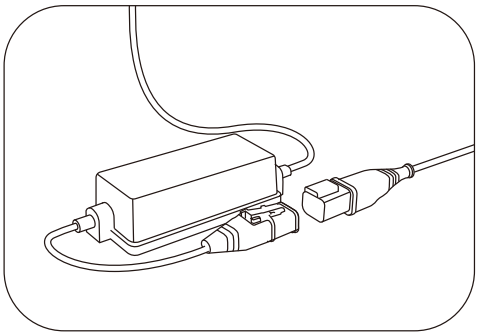

6.The installation is complete.

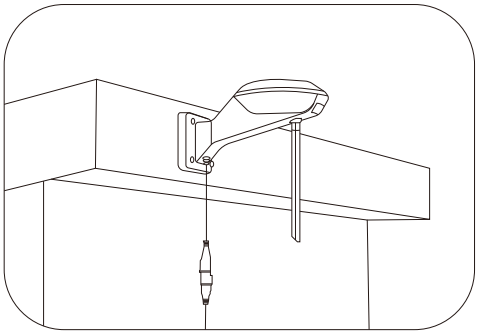

3.5 RTK reference station is installed separately from the charging station & on the roof/wall

Installation Kit：

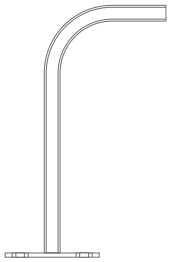

1 L-shaped mounting rod

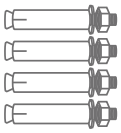

2 Expansion screw*4

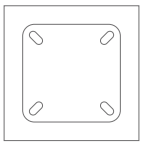

3 Drilling position in dication sticker

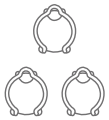

4 Cable buckle*3

It is also possible to site the RTK reference station in a separate location to the charging station.

Correct settings:

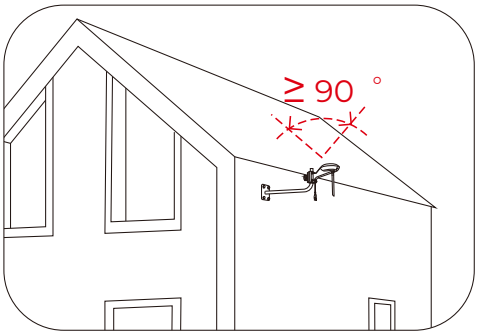

1 Install on wall,in open area.

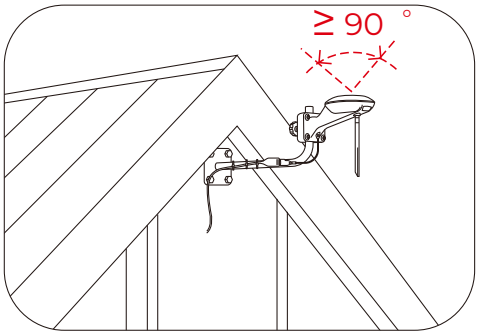

2 Install on roof far from any obstruction that may affect signal.

Wrong settings:

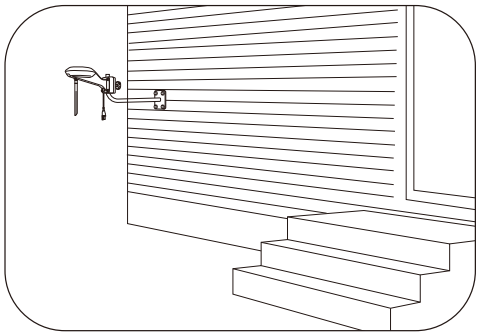

1 Do NOT install on high wall.

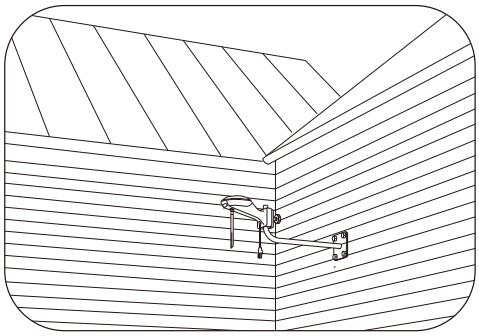

2 Do NOT install antenna surrounded by walls or in covered areas.

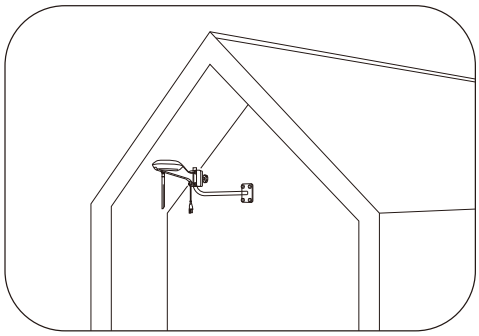

3 Do NOT install under eaves or gutters.

Overview of the installation when it's completed :

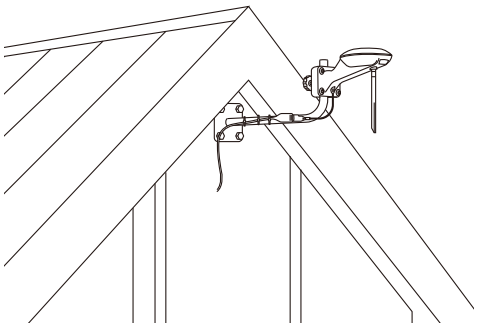

Installation Process:

1.Choose a suitable installation area on the outer wall of your house.
2.Stick the sticker on the wall indicating the position of the drilling hole and drill holes in the appropriate positions.

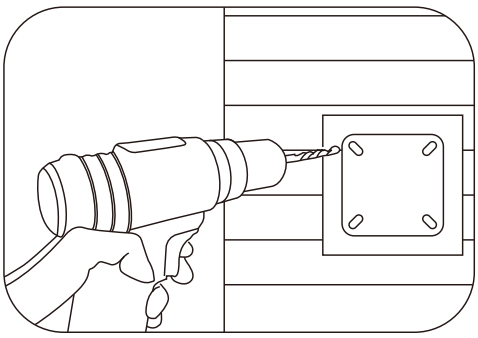

3.Install the expansion screw in the drilled hole.

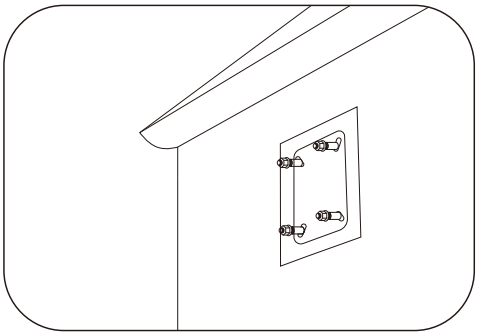

4. Fix the installation rod on the wall with expansion screws and tighten the nuts of the expansion screws with a wrench.

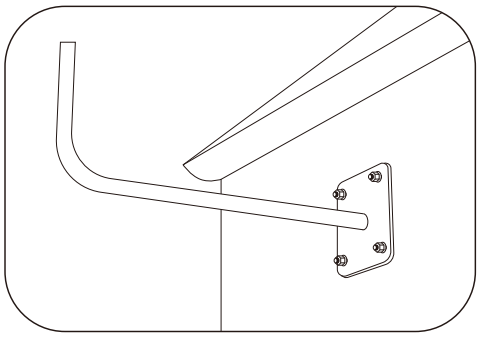

5. Install the RTK reference station on the front end of the L-shaped installation pole (note that the antenna must be installed on the RTK reference station first).

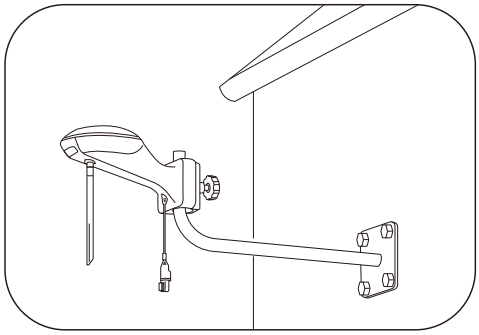

6. Connect the 10m end of the RTK extension cord to the RTK reference station and fix the cord harness along the L-shaped installation rod with a cord tie.

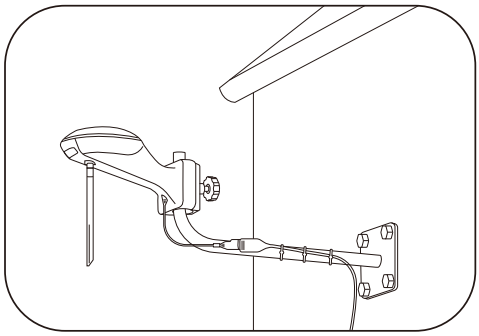

7. Connect the other end of the RTK extension cord 10 m (approx. 33 feet) to the RTK power adapter and turn on the power.

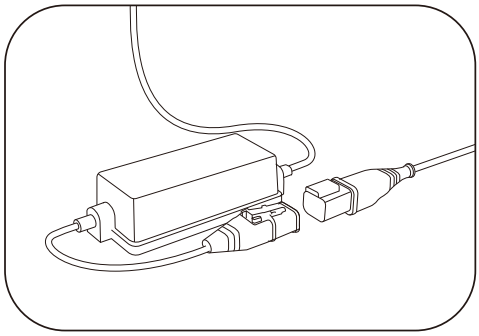

8.The installation is complete.

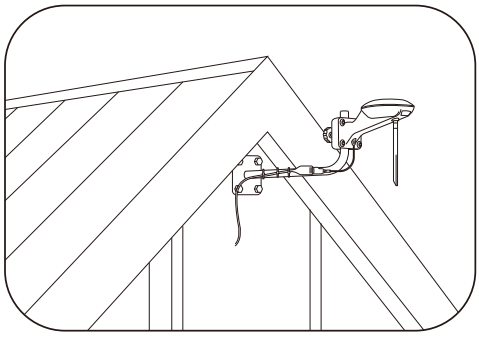

3.6 LUBA garage installation

Fasten the garage cover on the top of the charging station from front to back and tighten the two screws on the back of the garage cover to complete the installation of the garage.

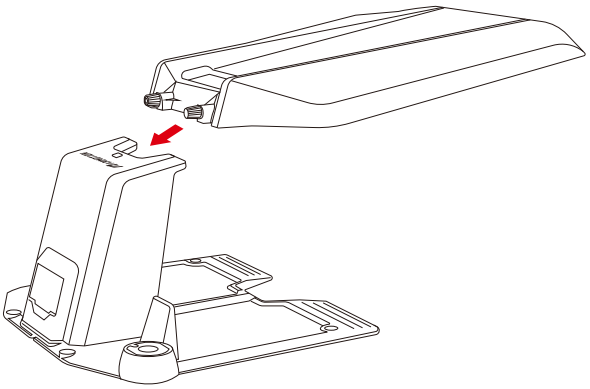

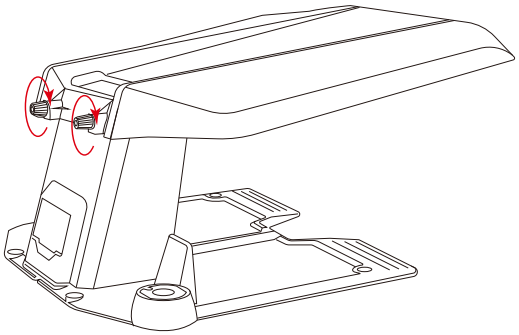

Note:

1.Do not place items on the top of the garage to avoid damage to the garage and affect the vehicle signal.
2.The garage cover can be lifted at an angle of 30°, but it cannot be opened into a vertical state. Do not forcefully lift it upwards.
3.If there is heavy snow during winter in your area, it is recommended to store the mower indoors at this time. If you need to use it, please clear the snow from the top of the garage before starting the mowing task. Also, before opening the garage cover, check whether there is ice on the shaft. If there is ice, please remove it before opening the garage cover.

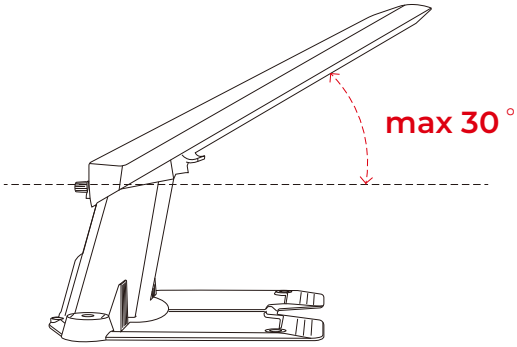

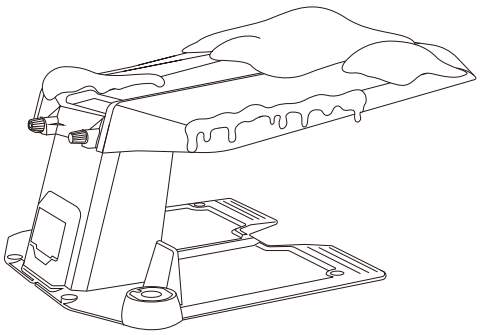

4. Preparation & Activation

4.1 MAMMOTION APP download & Installations

MAMMOTION LUBA is a 4-wheels-differential (4WD) robotic lawn mower. The 4WDenables LUBA to break the limits of mowing jobs.
LUBA Series robot lawnmowers feature RTK GNSS navigation and virtual-mapping systems. These allow users to customize their mowing tasks with different mowing areas and schedules on Mammotion APP. They provide a picture-perfect lawn maintenance solution with a real hands-free experience.

Mammotion App Android Version:
Android App Download link:

Android App Download

Mammotion App iOS Version:
IOS App Download link:

IOS App Download

4.2 MAMMOTION account sign up and login

How to sign up:

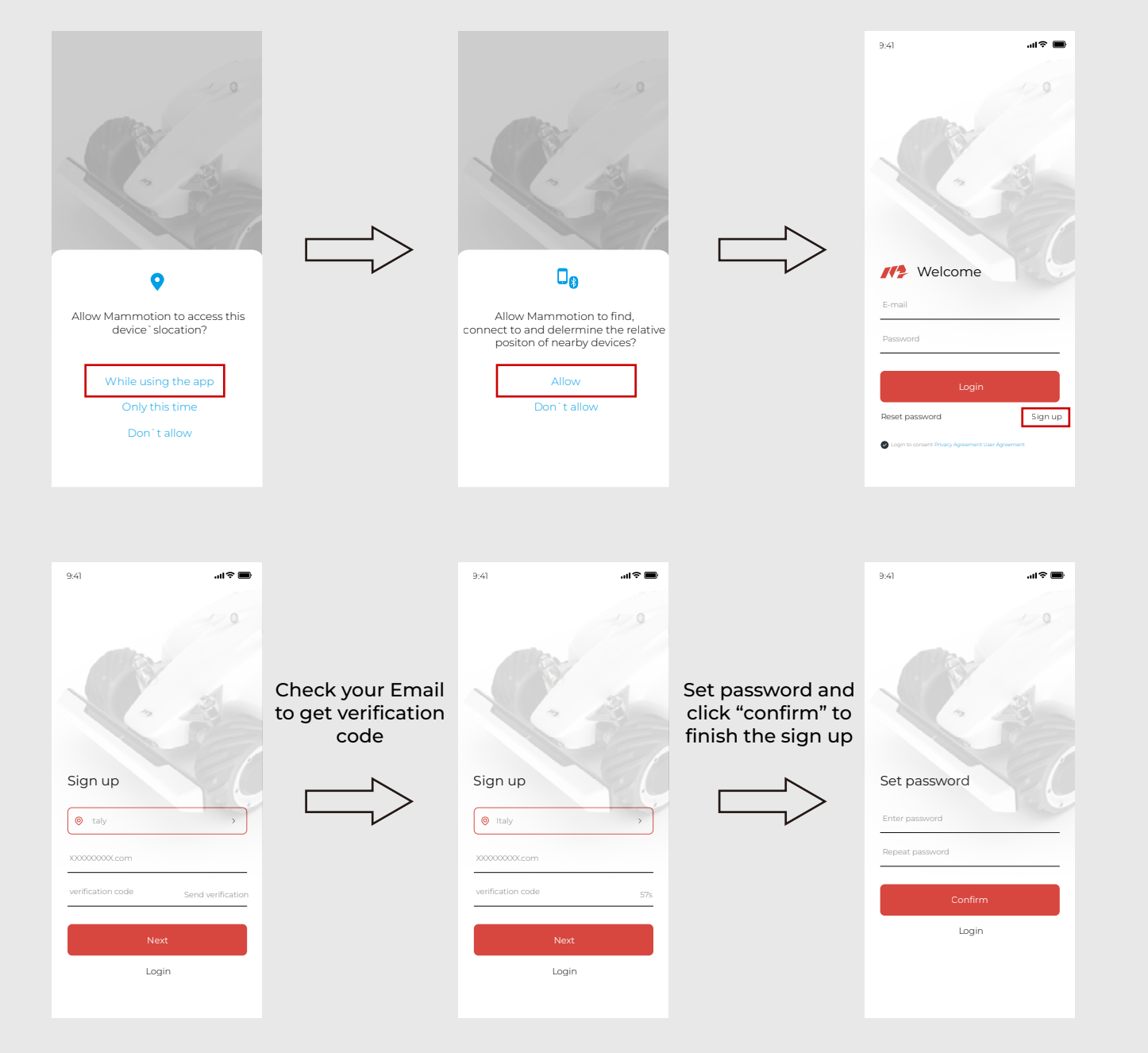

1.Switch on the Position and Bluetooth on your phone. Click Sign up and select the country and input your email address.

2.Then click "Send verification". A verification code will be sent to your email (if you don't receive the verify code, please check your spam folder or check the blacklist of your Email and wait several minutes and retry to click the Code).

3.Input the verifying code (the verify Code is valid for 10min. If this time is exceeded please re-click the "Send verification" button to get a new Code) into the App and click Next to set the password.

4.Click "confirm" to finish the sign up.

How to login:

1.Input your account and password to login.

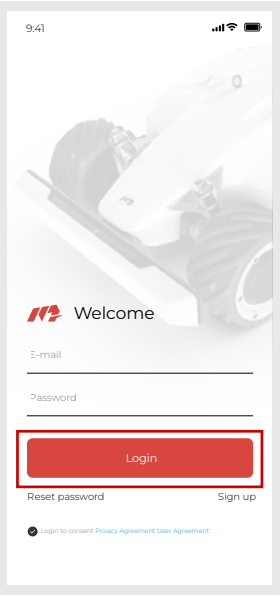

4.3 Add your LUBA to the Mammotion App to continue setup and self-checking：

After users login to the App for the first time, it is necessary to Add your device to it.

Note:

1. Please read the guide on Mammotion App carefully
2. Please make sure the secure key is correctly inserted into LUBA

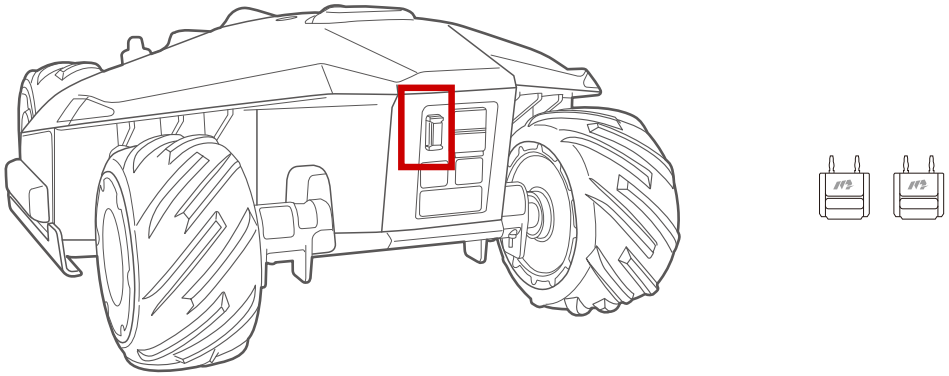

3. Please make sure that your LUBA is powered on (with the LED indicator on the front bumper constant green)
4. Make sure the distance between your phone and LUBA is less than 3 m (approx. 10 feet).
5. Make sure that there is good WIFI or hot spot signal

If it shows “

”, please wait a moment for things to complete
One LUBA can be connected to ONLY ONE Mammotion account. One Mammotion account can add multiple LUBAs. Different phones can use the same Mammotion account. ONLY ONE phone can control ONE LUBA at same time.
The task data and map data are stored in LUBA itself, so when you use different phones with the same LUBA, the map and task data will be synchronized.

Process:

1. Click “+” to start initialization of LUBA

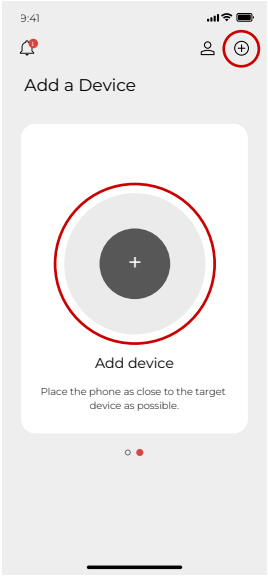

2. Read the guidelines of initialization carefully and make sure these guidelines are followed.

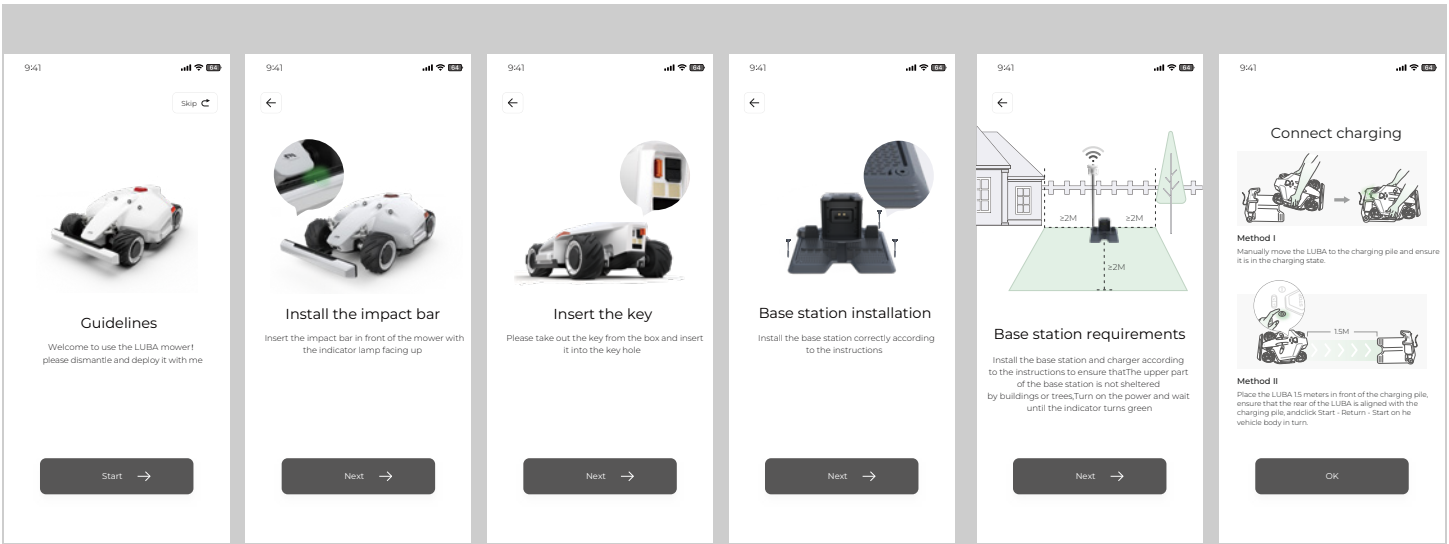

please read the guidlines carefully and follow the guidlines | please incert the front bumper to LUBA with the indicator facing up | please incert secure key to LUBA so that your can switch on LUBA | Set chaarging station at proper place. | Set RTK reference station at proper place. | Set LUBA on thechaarging station

3. Long press(5s) the power button of LUBA and power on LUBA.

4. Add LUBA to your Mammotion account.

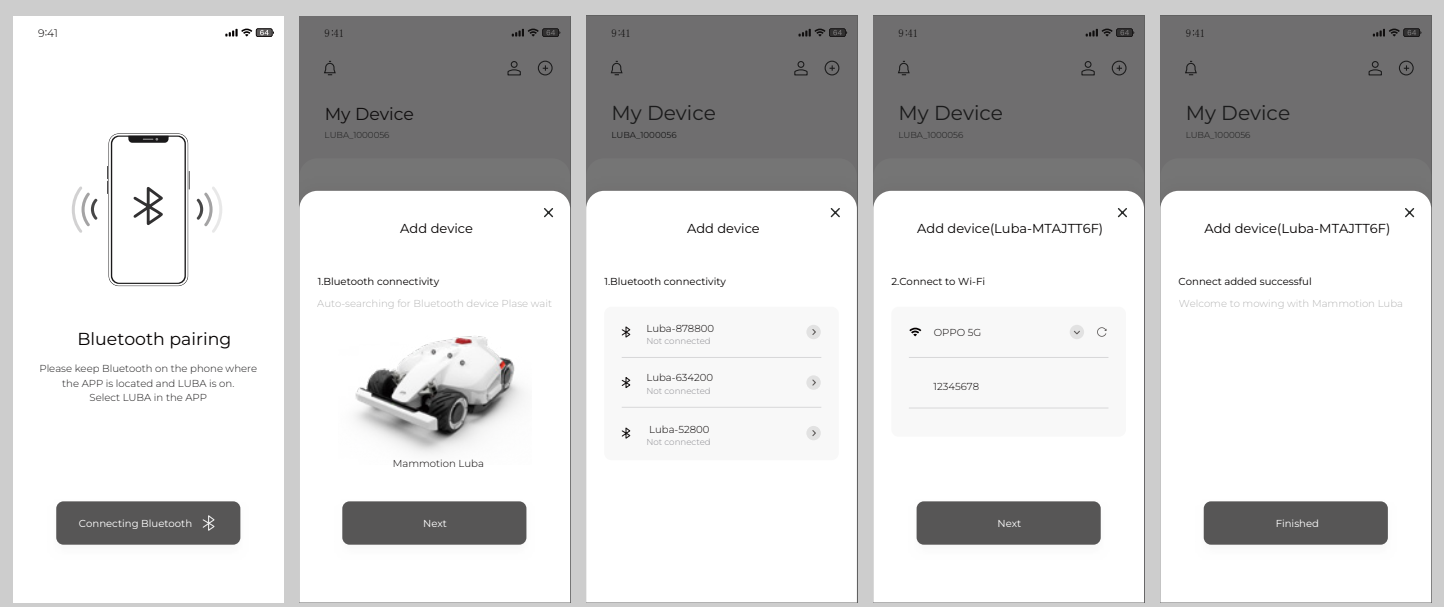

Switch on bluebooth of your phone | Connect LUBA to phone by bluebooth | Register your LUBA to Mammotion via WIFI/hot spot | Add LUBA successful

Activate LUBA: After the Bluetooth connection, it needs to connect LUBA to Wi-Fi & Hot spot for activation.

Note:

The connection is between LUBA and the MAMMOTION Cloud, it has nothing to do with how your phone connects to the Internet, which means you do not have to connect your phone to the same WIFI & hot spot as LUBA. You can also set your phone as a hot spot if your phone has good signal.

The App will search the nearby available Wi-Fi signals. Please note that we highly recommend you select the WIFI & Hot Spot with the best signal quality. Otherwise, the activation may fail.

Select the Wi-Fi & hot spot, enter the password for this and then click Next. Wait until the App shows Device is successfully added. Then click Finished.

Once you add LUBA to your account, it will not unbind automatically. Next time you switch on LUBA using the same account, LUBA will still be there. And once LUBA is added, Internet (WIFI & hot spot) is not necessary for map planning, mission setting and working.

However, if you would like to remotely receive information and check the status of LUBA, we recommend that you cover your whole lawn area with WIFI

5. Self-checking:

After initialization for the 1st time before you use LUBA, please ensure that:
The RTK reference station is in the proper place.
The charging station at the proper place.
LUBA is on the charging station and the charging process is working and stable.
LUBA is switched on.
The positioning status is operational.

The self-checking indications should appear as below:

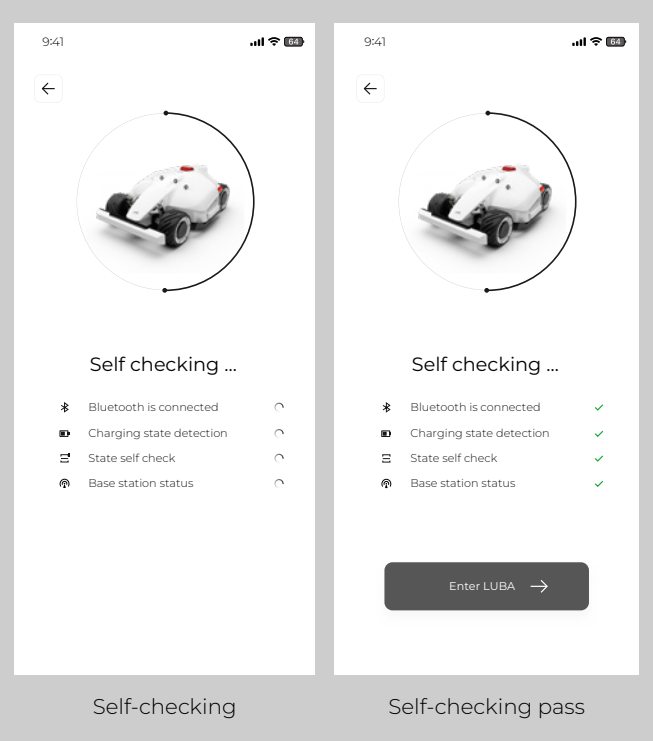

Self-checking | Self-checking pass

Note:

1.If “Bluetooth connection” failed, please check if Bluetooth of your phone is on, and the distance between your phone and LUBA is not too great (should be within 5m);
2.If LUBA is on charging station but not charging (charging failed), please check if the charging station if set in a proper place, and the charging port at back of LUBA is aligned with the charging port on the charging station
3.If positioning status is bad (“RTK Reference station” failed), please check if the RTK reference station is in a proper place, is switched on and is operational (indicated by a constant green light during daytime hours)

4.4 Basic operation & App interface introduction on main page

The main page of the App is as shown below:

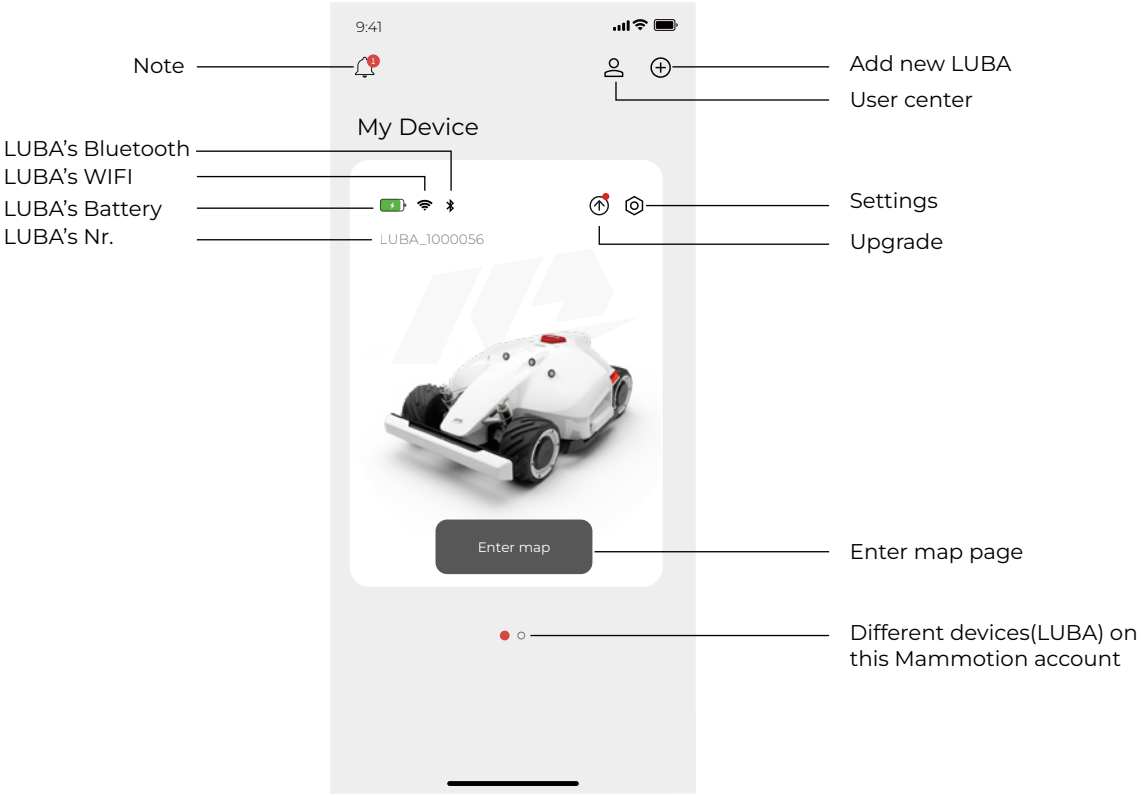

Settings:

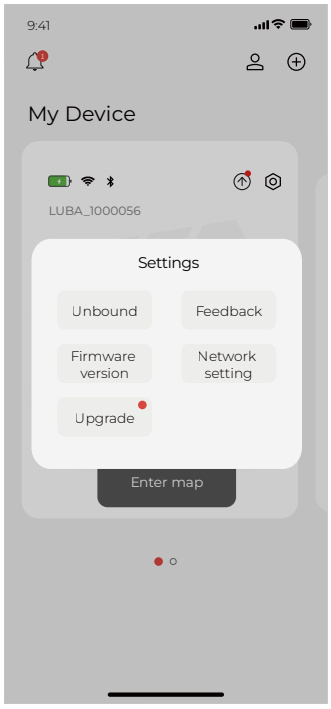

Unbound: Unbound the added LUBA.

Firmware version: Check the version of the Firmware of different parts on LUBA.

Upgrade: Upgrade the Firmware, if there is a red dot, means you have new firmware and can do the upgrade.

Feedback: When you meet issues when you use LUBA, you can here to submit the feedback through our logs on the App.

Network setting: can choose to connect WIFI & Hotspot or disconnect.

Note:

The WIFI & Hotspot connection of LUBA does not affect the normal task and working of LUBA once LUBA is registered and initialized for the first time.

5.Firmware upgrading:

5.1 Preparation:

1.Please make sure that your LUBA is powered on(with the LED on the front bumper green;).(图)
2.Make sure the distance between your phone and LUBA is less than 3 m (approx. 10 feet).
3.Make sure that there is good and stable WIFI or hot spot signal;

4.DO NOT switch off LUBA or disconnect the WIFI & Hotspot connection when upgrading, otherwise the upgrading may fail.

Upgrading Process:

1. Connect LUBA to the WIFI & hot spot by clicking “Network settings”. The WIFI & Hotspot connection is complete when turns to .

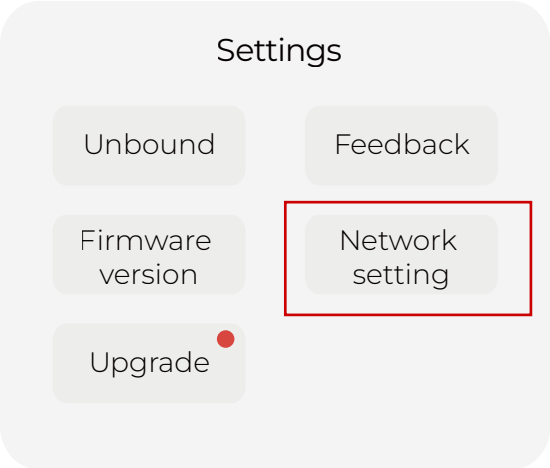

2. To start upgrading: click the “Upgrade” button in the Settings or the symbol to start upgrading.

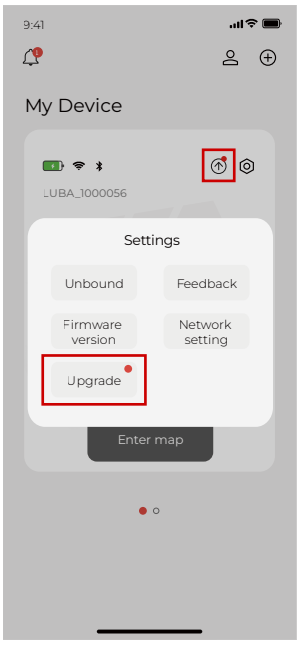

3. The message box will show you what is new in the firmware. Click “One click upgrade”

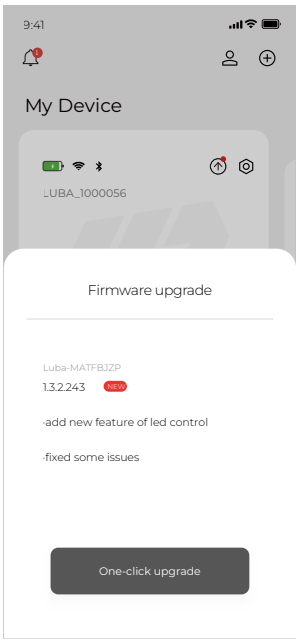

4. Wait until the upgrading is done (make sure the WIFI & Hotspot is available during the upgrade):

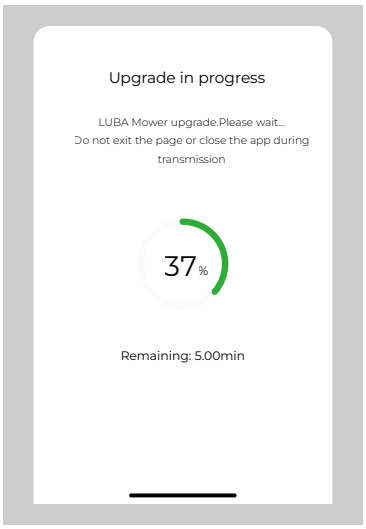

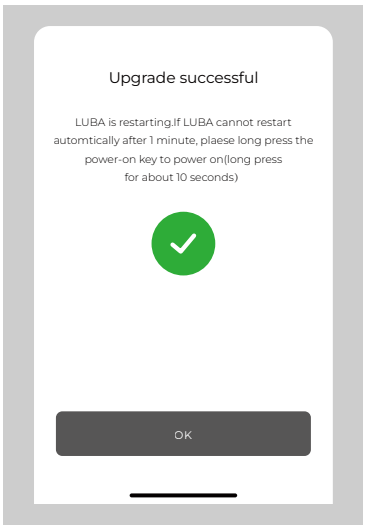

5.When the APP shows that LUBA is successful upgraded, the LUBA will automatically switch off, Please LONG Press (Press about 10s until the LED side lights is on) the power button of LUBA to switch on.

6. If the upgrade failed, please check the WIFI & Hotspot connection and try again.

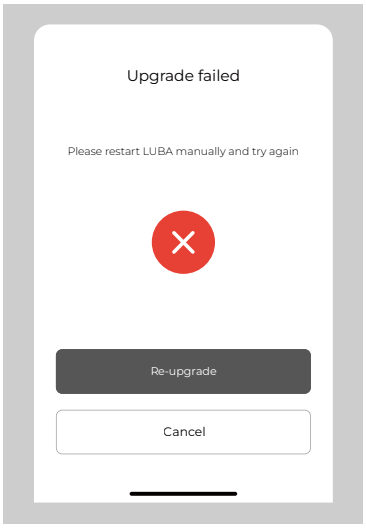

7.Check if the firmware of LUBA and APP have already reached the newest firmware by clicking “setting version”. If yes, then you can start LUBA with the newest firmware now. If no, please contact us to solve the issue.

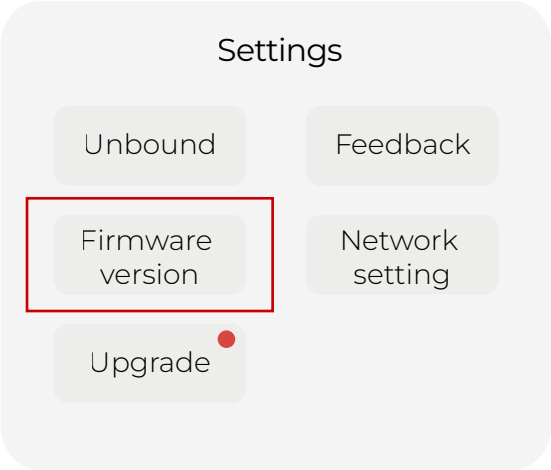

5.2 How to check firmware version and App version:

Check firmware version:

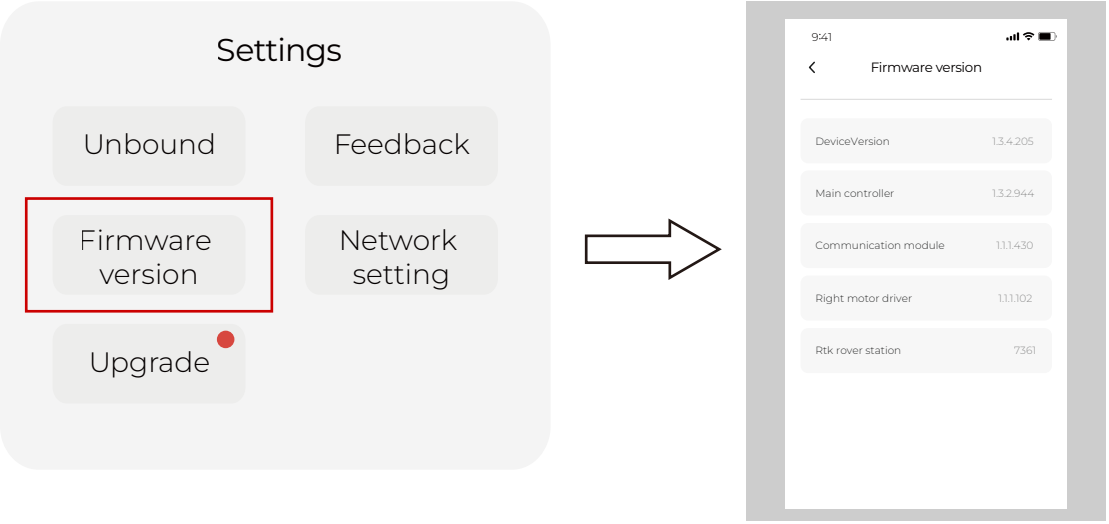

Check App version:

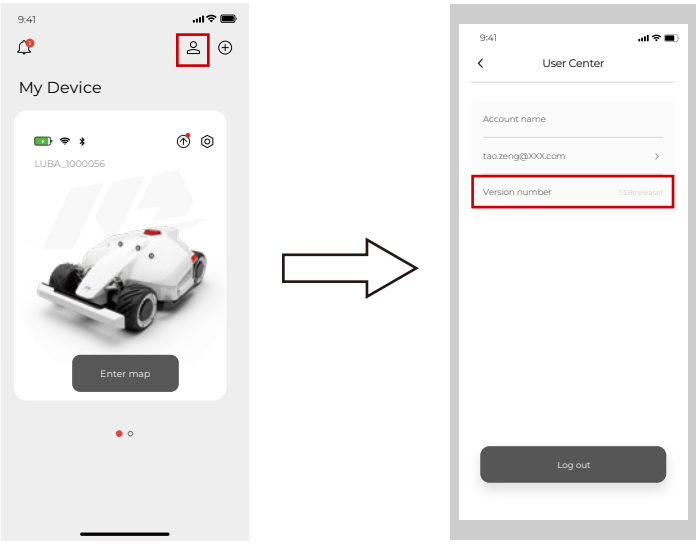

5.3 Reporting Issues & Logging feedback

Important information about how to record feedback:

1. Please describe HOW the issue is affecting things, WHEN and WHERE the issue appears. This will help us a lot to fix the issue.
2. Please take images or video if possible and also upload the images and videos to us.

Feedback process:

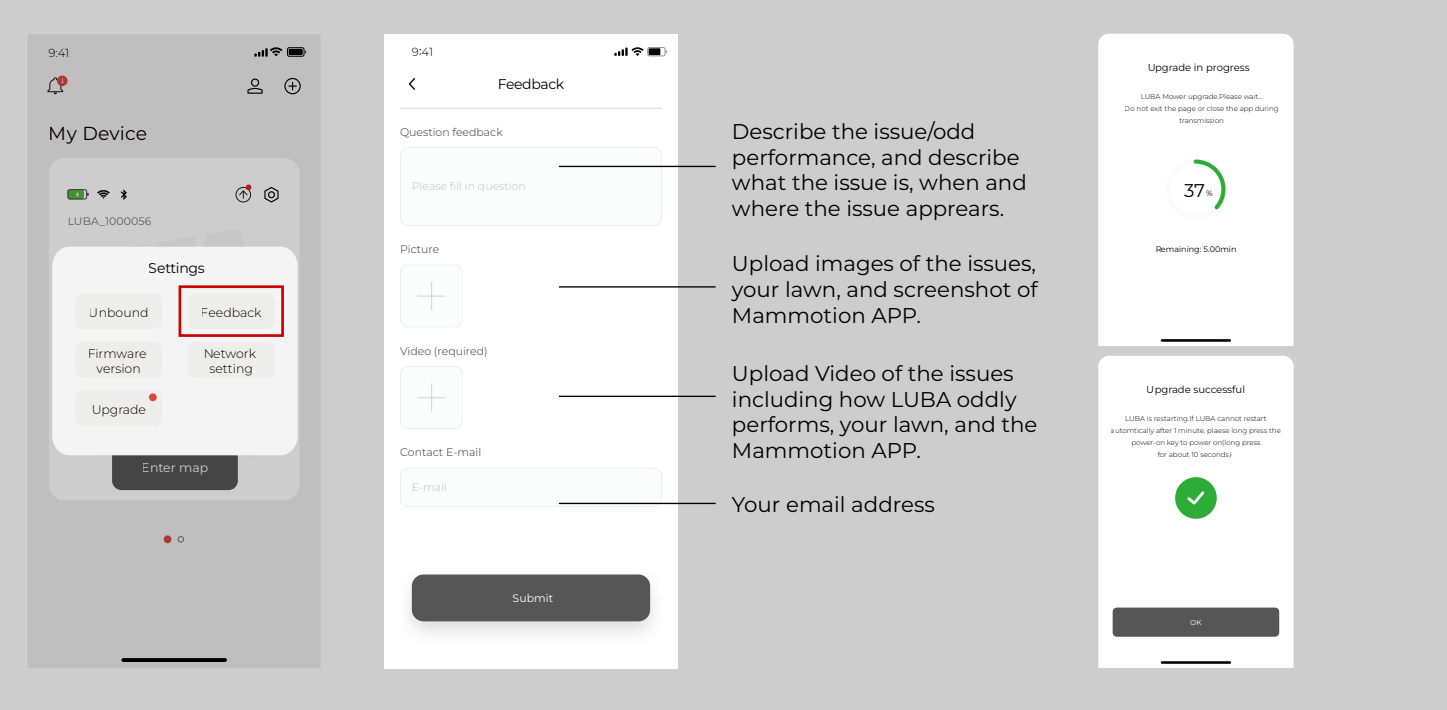

Note:

1.During the feedback process, please make sure that both the Bluetooth and WIFI & Hotspot connection is good. And also ensure that the distance between your phone and LUBA is less than 3 m (approx. 10 feet)

6. Basic operation & App interface introduction on the Map page

Below is the interface of the map & control page:

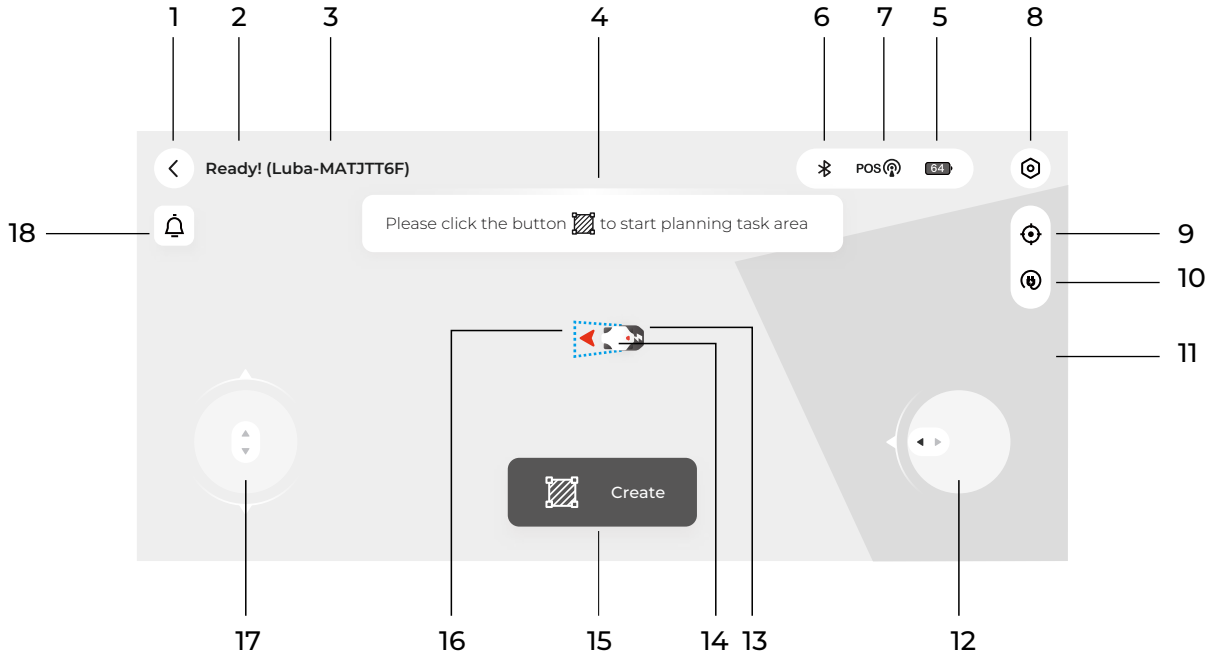

1. Back to previous page: to main page
2. LUBA status. The status are as follows:

STATUS		
charging	connection path planning	paused
returning	initializing	obstacle planning
working	ready	lock
task planning	offline	

3..Device number
4.Guide message box
5.Mower battery power
6.Bluetooth connection status. If Bluetooth is connected successfully, it will be shown as a black icon. If not connected successfully, then the icon is gray.
7.Positioning status: The position status could be “Fine” or “Unavailable”. If “fine” LUBA can work normally, if “unavailable” LUBA could not do the automatic navigation and will not be able to function.

If your LUBA stops working at some point, please first check the positioning status.

Positioning unavailable

Positioning fine

Clicking the “POS” symbol will show more detailed information about positioning status. As shown below:

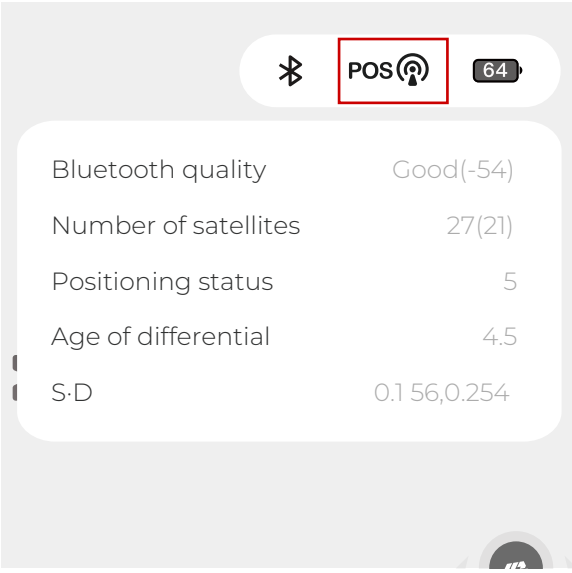

Bluetooth quality: shows the strength of the Bluetooth connection.

Number of satellites: the Number of satellites observed by LUBA. If either of the 2 numbers is less than 20, there will be a risk that the positioning status may be “unavailable”. If you meet this issue, please drive/set LUBA and the task area to a more open-sky area to let LUBA receive more satellite signals from the sky.

Positioning status: “4” if RTK is working fine, other values indicate problems as described in the table below:
Age of differential：Time delay of the RTK reference station data
S.D.：standard deviation of positioning.

	meaning	reference value	reason of out of reference value
Bluetooth quality	The quality o bluetooth connection	Good	Phone too far from LUBA
Number of satellites	the Number of satellites observed by LUBA	>20	LUBA can not gel enough satellite data(please check number of satellites).
Positioning status	Positioning status	4	see the sheet below
Age of differential	Time delay of RTK reference station data	0<Age of differential<20s	1.RTK reference sation is constant Defect(0) 2.The distance from reference station and LUBA is too far.3.there is high concrete wall/ large metal/ very dense tree wall between reference station and LUBA
S.D.	standard deviation of positioning	0<S.D.<0.1	positioning unavailable

Positioning status	meaning	accuracy	reason	to do
0	no positioning		no satellite signal received at all (in the room/ LUBA covered/ defect)	Drive LUBA/set task area to a more open sky area.
1	single point positioning	Several meters	LUBA does not received RTK reference station at all,(please check "age of differential) : 1) RTK reference station defect. 2) LUBA too far from reference station 3) the signal transmit path from reference station and LUBA is nearly fully obstructed/covered	1. check if the LED on RTK reference station is constant green. 2 check the distance from reference station and LUBA 3. check if there if high concrete wall/large/metal/very dense tree wall between reference station and LUBA 4.move reference station to a more opensky area
2&4	float positioning	20cm-1m	1.LUBA can not get enough satellite data (please check "number of satellites") 2. RTK reference station does not get enough satellite data(check the LED on reference station)	1 Set RTK reference station to a open area. 2 Drive LUBA/set task area to a more opensky area.
5	FIX positioning	less than 5cm	Fine positioning status	Good, can use LUBA NOW!

8.Setting:
1.) LUBA's speed when under manual control (can only be set when manually controlling LUBA and not when creating a task)
2.) If rain sensor on or off
3.)Obstacle avoidance logic setting
9.View returns to the center of the map
10.Call back and recharge
11.Background map
12.Manually drive using the steering clockwise/ anti-clockwise button
13.Charging station
14.LUBA symbol, red arrow points to direction
15.Create task. Click here to create a new map with mowing task.
16.Recharging area
17.Manually drive forward/backward button

Preparation:

1.Ensure you have already done the MAMMOTION account sign up, the LUBA activation and added LUBA to your account.
2.Make sure that both the LUBA firmware and APP are of the newest version.
3.You have already installed the charging station and the RTK reference station in a the proper place.
4.Check your lawn, make sure that there are not water-filled holes which can cause damage to the product.
5.Consider the layout of your house, your lawn and all obstacles, and then decide where to set the virtual boundaries of the task area and no go zone(s).

6.Fill in any large holes in the lawn.
7.When LUBA is working, make sure that there are no people, children, pets or other moving things on your lawn.
8.We highly recommend you set any areas with obvious holes, gullies, tree roots or other obstacles as no go zones.
9.LUBA can only be used when the front bumper is attached and the LED indicator on the front bumper is on.

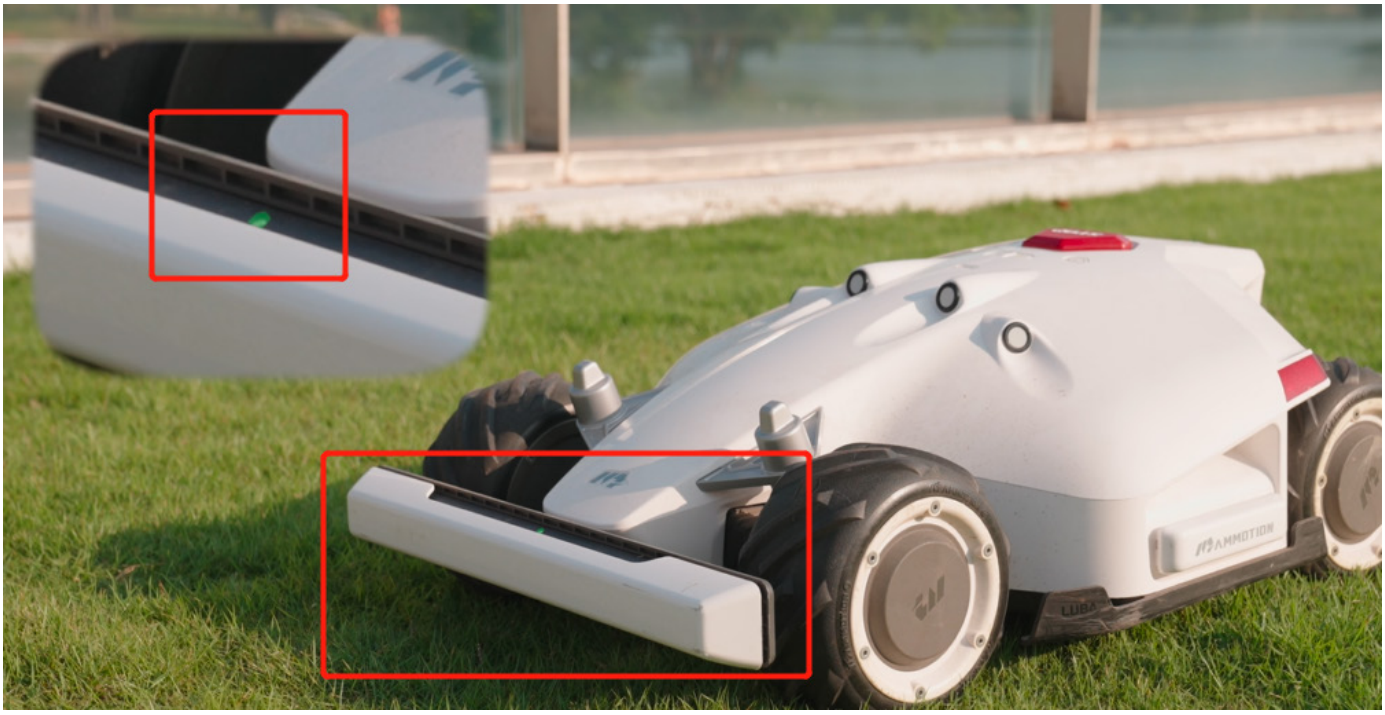

6.1 Map page when creating Task:

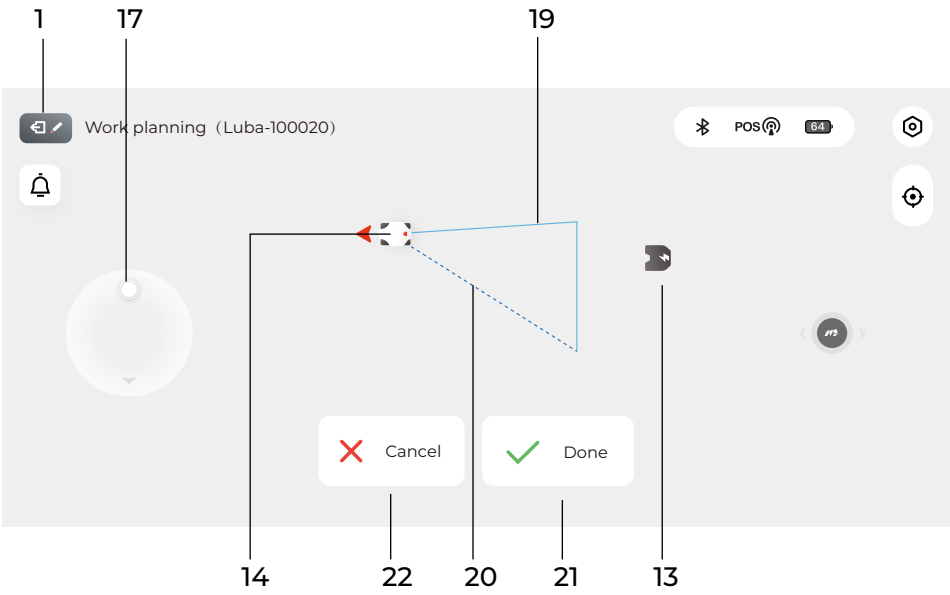

1. Back to previous page (map & control page)
13.Charging station symbol
14.LUBA symbol, red arrow points to the direction of travel
17.Manually drive forward/backward button
19.Boundry of task area (updates as the area is drawn)
20.Direction line from LUBA's current location to the start point.
21. "Done" button, press this button to finish the work planning and close your working area

Note: if “Done” clicked, this means that a task area will be created immediately, one boundary will be from the start point to LUBA’s current location, e.g. if in the image above, the “Done” is clicked, a triangular task area will be created.
Another way to finish task creation is to manually drive LUBA back to the task area start point. Once LUBA reaches the start point or other point on the already existing boundary then task creation will be complete.
We recommend you use this second way to finish creating the task area, or at least click the “done” button when you are near the start point.
22.“Cancel” button, press to cancel task planning.

Note:

When creating a task, the “call back and auto recharge” button is unavailable. You need to cancel or finish creating the task first.

6.2 Task area selected(can start mission or continue edit the task area)

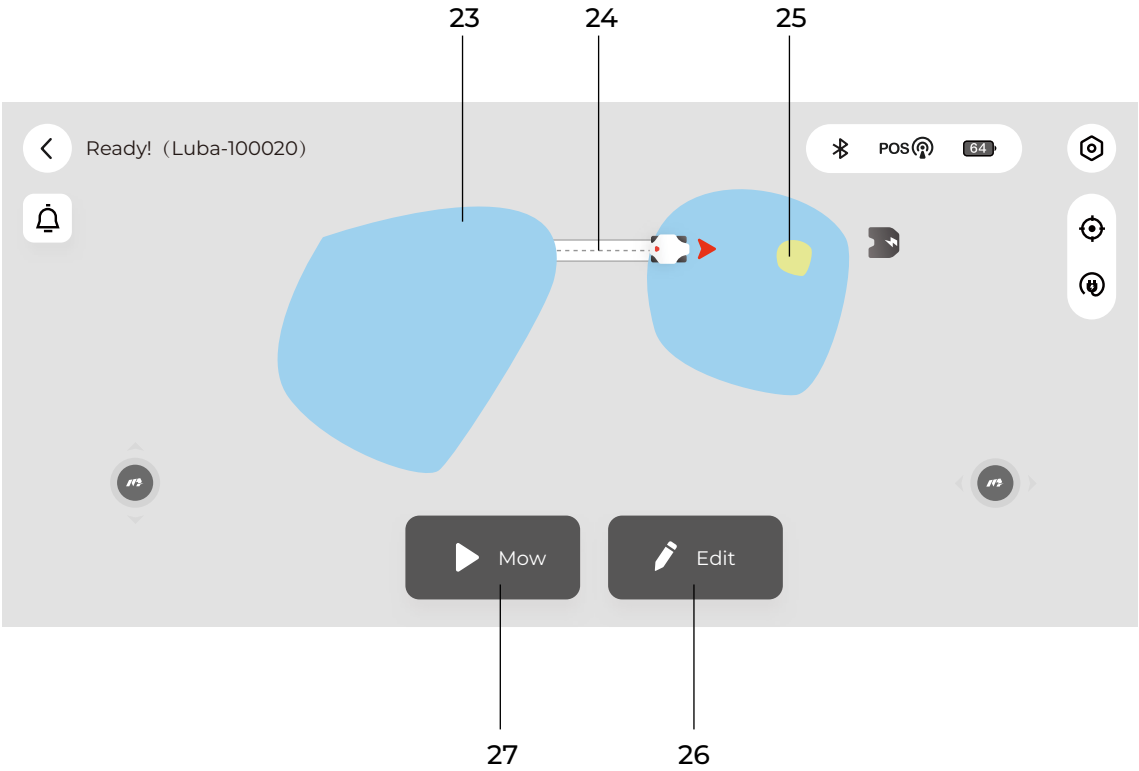

23. Task area(selected)
24. Connection path
25. No go zone
26. Edit the task area (add/delete/change task area/path/no-go zone)
27. Start the task

During the task:

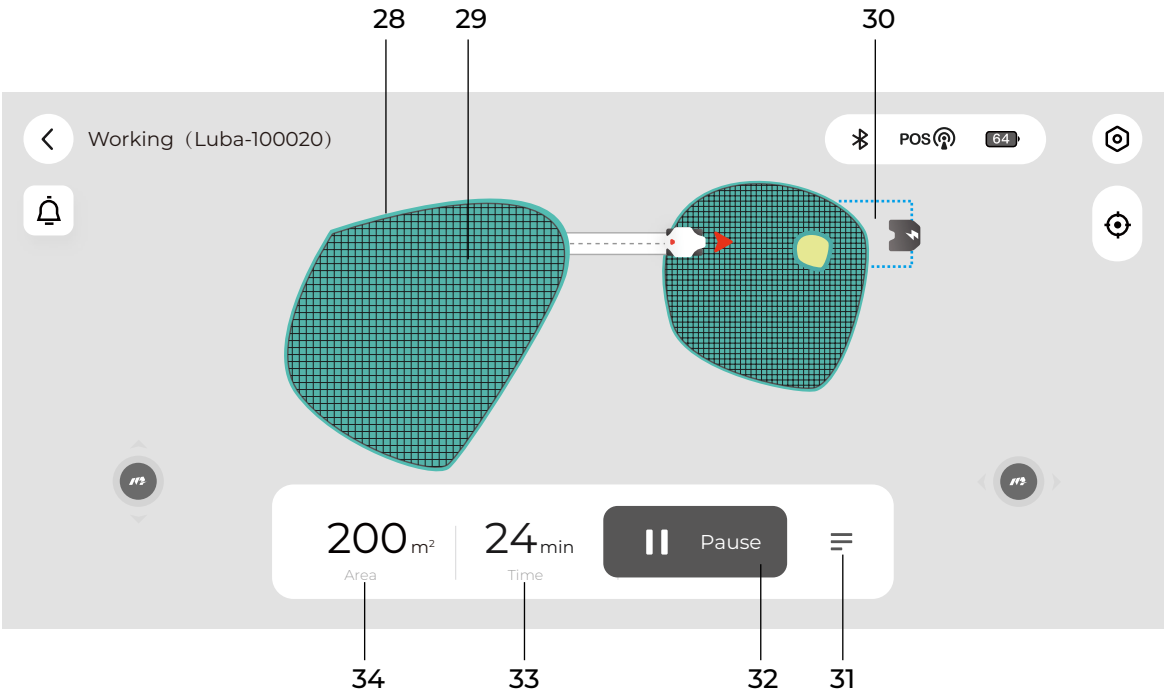

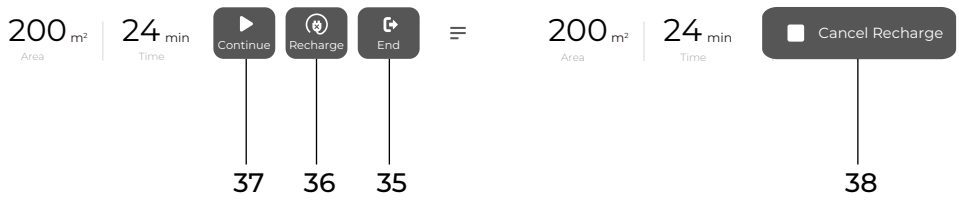

28. Working route (at boundary)
29. Working route
30. Recharging area
31. More commands
32. Pause (when LUBA is working automatically)
33. Estimated task time (charging time is not included)
34. Task area
35. End task (go back to charging station, the task will not continue, when LUBA is 95% charged)
36. Set break point and go back to charging station and charge.
37. Continue working (this “Continue” button only works when the “Pause” button on the App is clicked. If the STOP button on LUBA is pressed, it is necessary to use the buttons on LUBA to unlock and continue.
38. Cancel the recharging progress

7.Create a task

Note:

1.Remove debris, piles of leaves, toys, wires, stones and other obstacles from the grass. Make sure no children and pets are on the lawn.
2.We highly recommend you leave 10-15cm distance if you drive LUBA along the edge of a wall / fence / obstacles / ditches

7.1 Initialization before creating a task:

1.After the “LUBA quick start installation” in Chapter 3 both the RTK reference station and the charging station should be properly installed. (If NOT, please go back to Chapter 2 and 3 and finish the installation)

2.After the “LUBA first setup and self-checking” in Chapter 4.3, LUBA should be powered on, upgraded to the latest version and positioned on the charging station with functional positioning status. (If NOT, please go back to Chapter 2,3 to finish the proper installation of the charging station and the RTK reference station, and Chapter 4 for the initial setup and checking. If LUBA is not already on the charging station, please drive LUBA to 2m from the front of the charging station, with the rear facing the charging pins, and use the App to call back LUBA):
3.The location of charging station and LUBA should be indicated on the map, as shown below, the positioning status should be good, and LUBA’s status should be “Located”

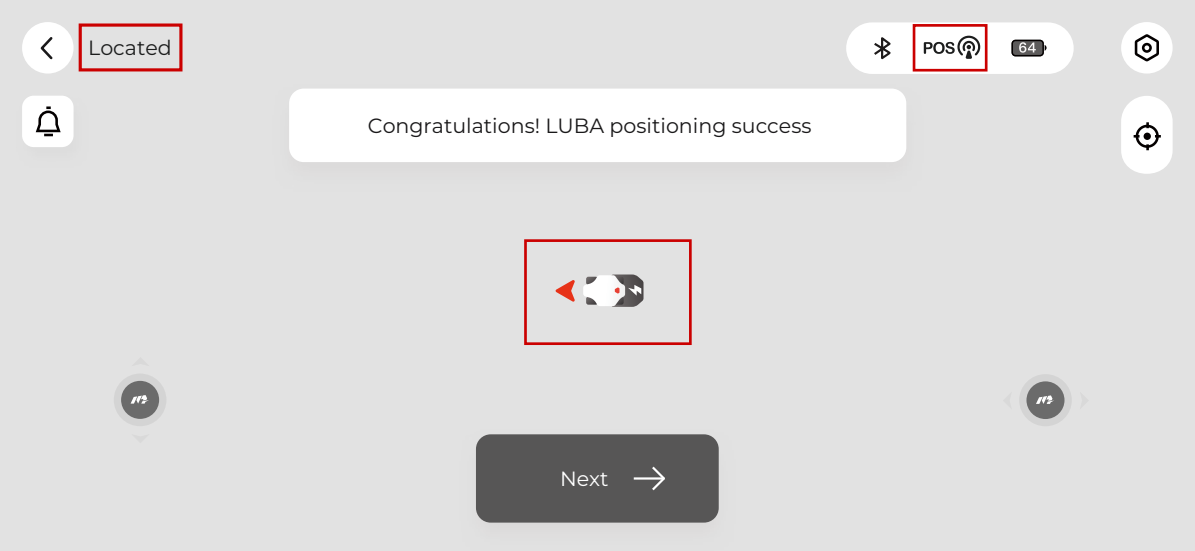

4.Click “Next” to start initialization.

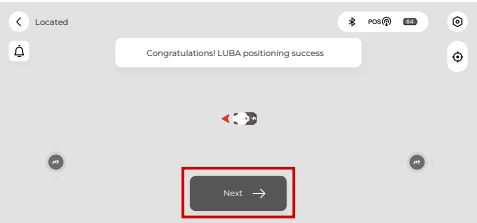

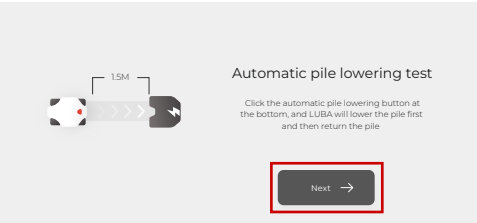

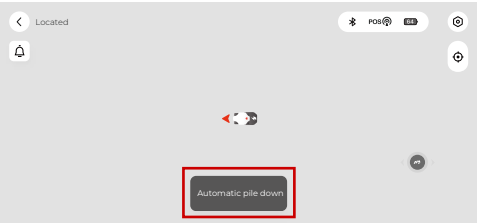

5.After the initialization, LUBA's status turns to "Ready" and you can now start creating a task as shown below.

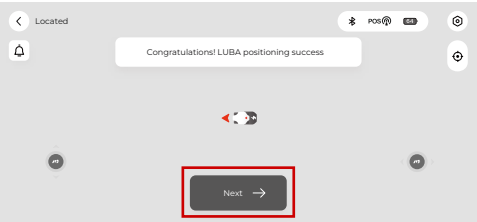

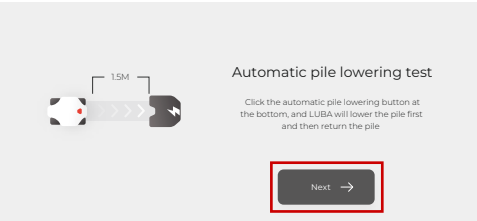

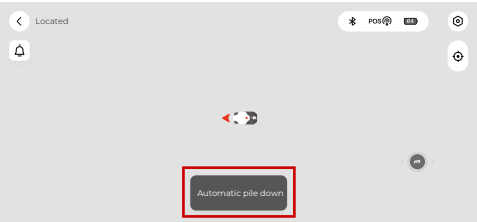

Note:

1. If both the charging station & the RTK reference station are not moved, next time you restart LUBA (even if after a winter break) or add/ change / delete the task area, you do not need to re-do the initialization. As long as LUBA's status is "Ready", it can continue working.

2. However, if you move the charging station & RTK reference station, you should redo the initialization because the coordinate system of LUBA and task area will need to be changed.

How to redo the initialization:

1.Set the RTK reference station/charging station in their proper place.
2.Put LUBA on the charging station and ensure that the positioning status is "Fine"
3.Select Setting -> "Charging station reset"

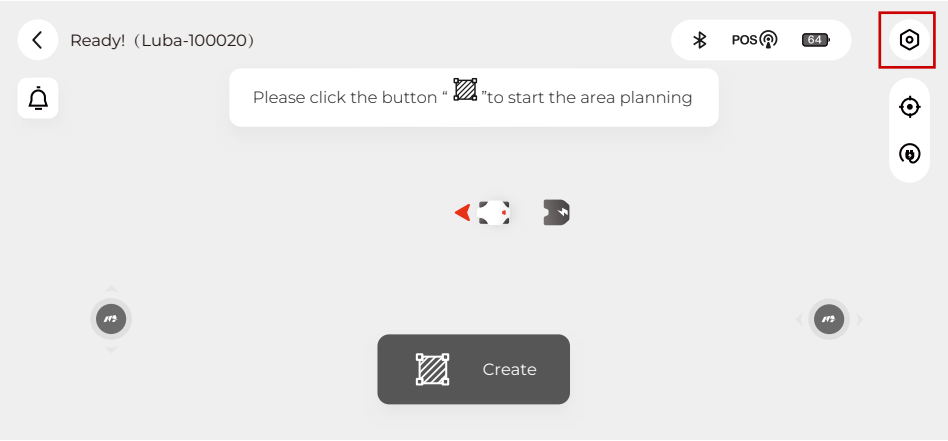

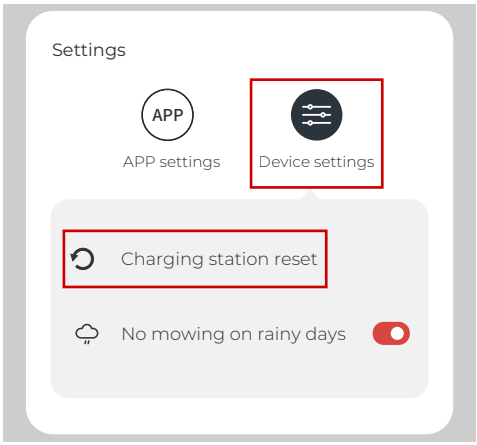

4.Any existing task area(s) and schedules will be deleted because the whole system is changed.

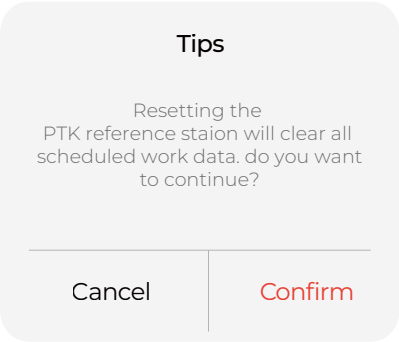

5.As described in Chapter 6.1, go through the initialization until LUBA's status turns to " Ready!"

7.2 Create a task map：

1. click “Create” to start creating task map

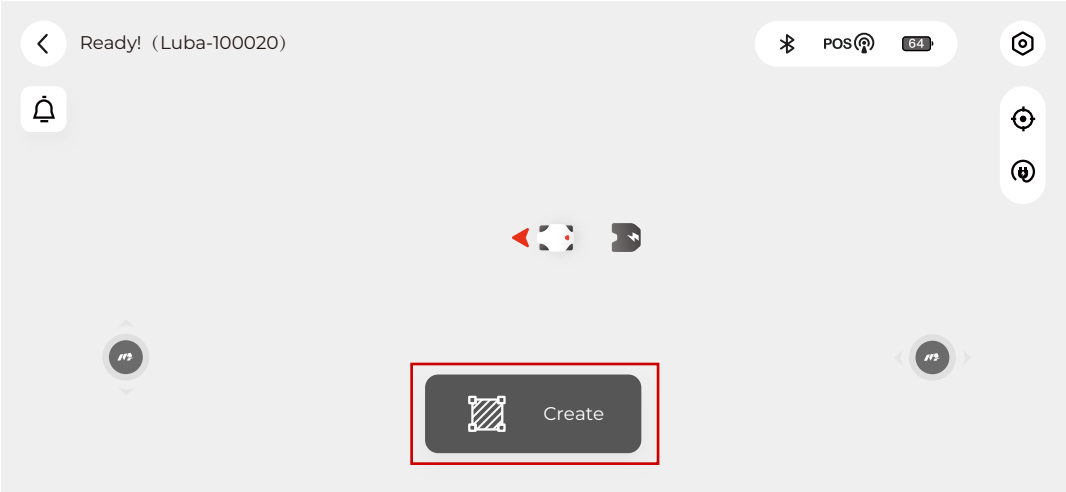

2. Read the guidelines of creating task & working with LUBA

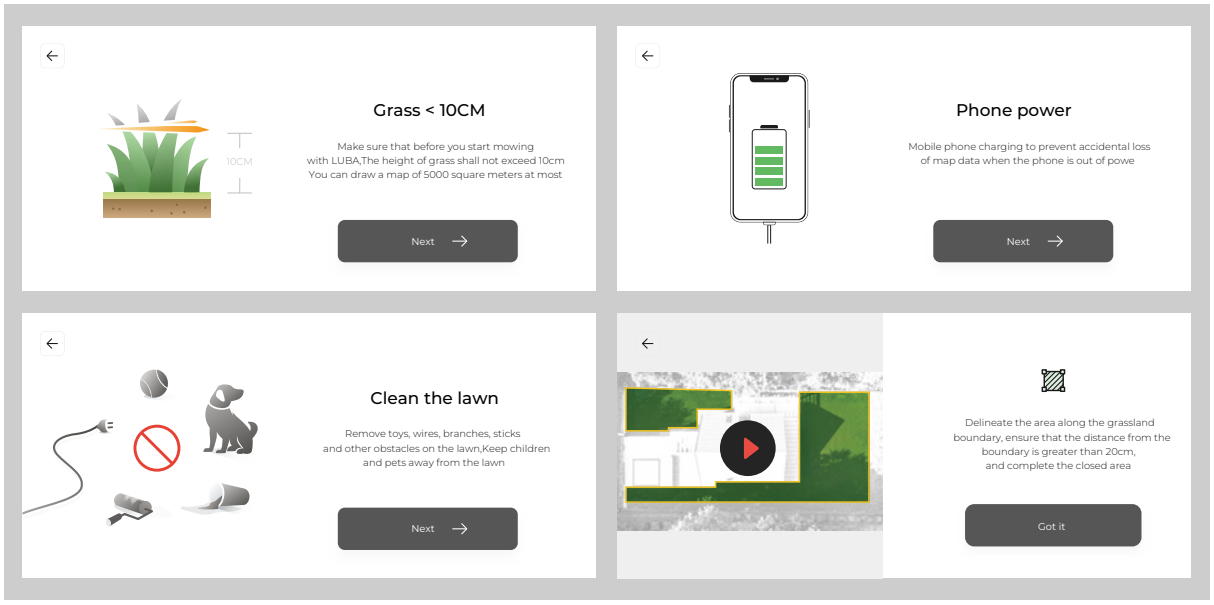

3. Start drawing the task area boundary

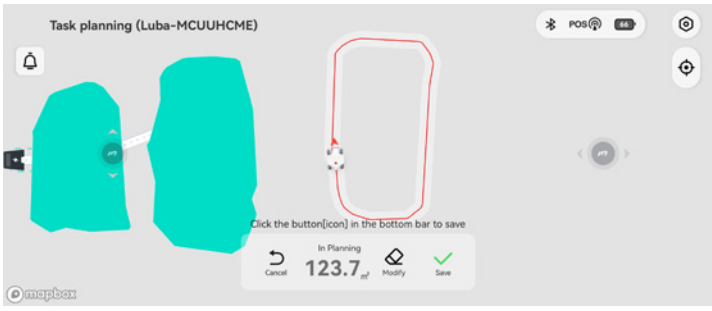

Note:

1) If “Create” clicked, this means that a task area will be created immediately, one boundary will be from the start point to LUBA’s current location, e.g. if in the image above, the “Done” is clicked, a triangular task area will be created.Another way to finish task creation is to manually drive LUBA back to the task area start point. Once LUBA reaches the start point or other point on the already existing boundary then task creation will be complete.We recommend you use this second way to finish creating the task area, or at least click the “done” button when you are near the start point.

2) “Cancel” button, press to cancel task planning.
3)When creating a task, the “call back and auto recharge” button is unavailable. You need to cancel or finish creating the task first
4)We highly recommend you keep a minimum 15 cm (approx.. 6 inches) from wall/fences and other obstacles (like trees) when planning for safety reasons.
5) The user should follow LUBA within 3 m (approx. 10 feet) to ensure a good Bluetooth connection, as well as for safety reasons.

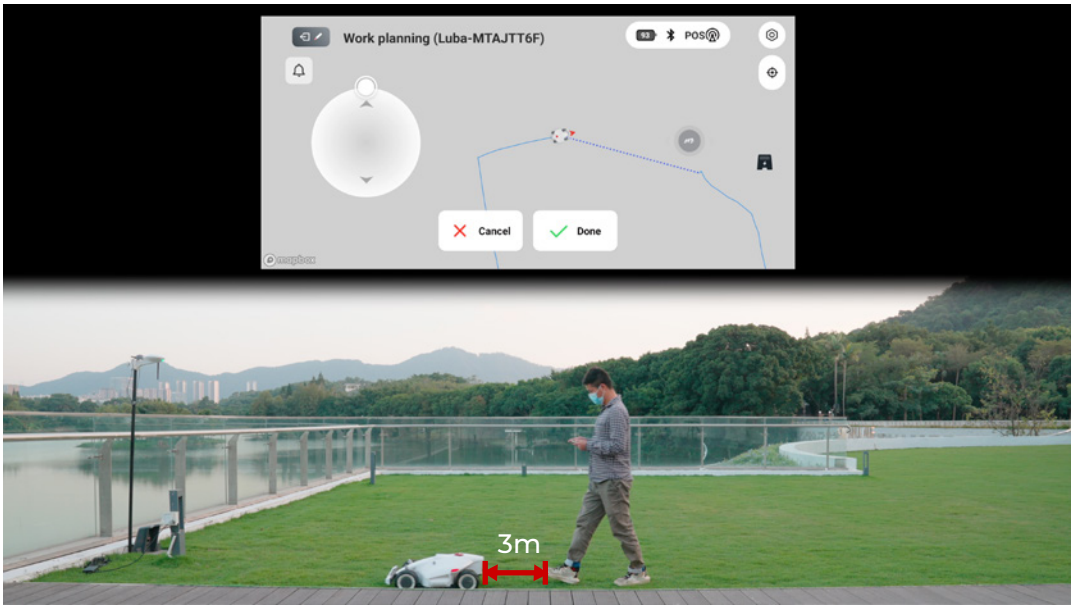

4.Finish the boundary drawing of the task area.

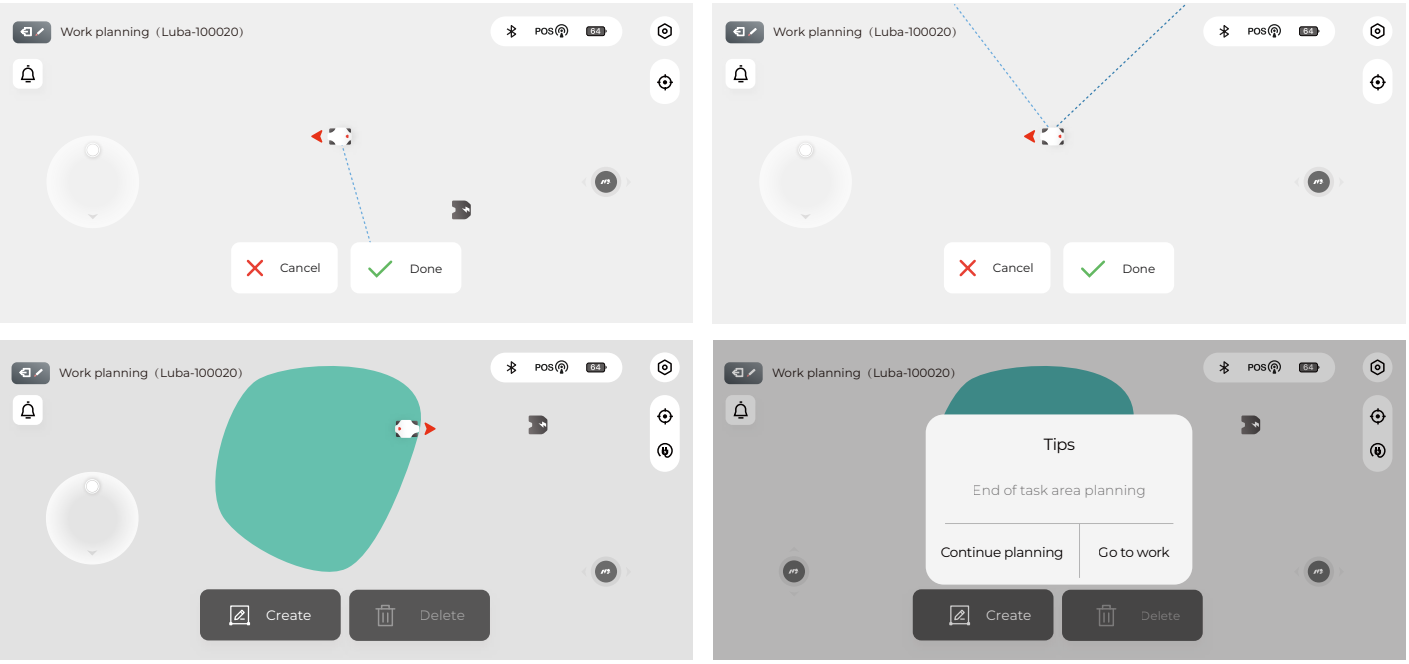

5.You can continue planning (add another task area in the same task, add a no-go zone, add a connection path (channel)

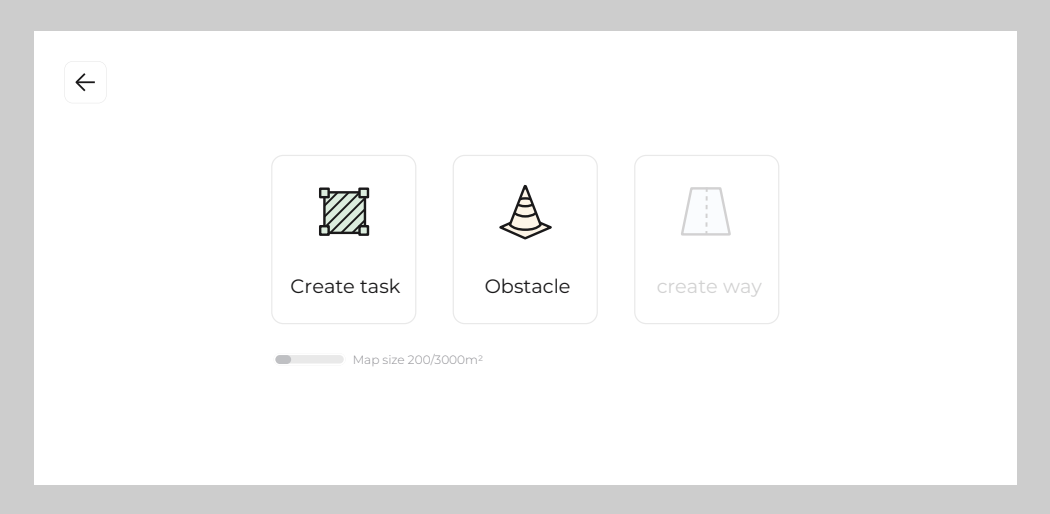

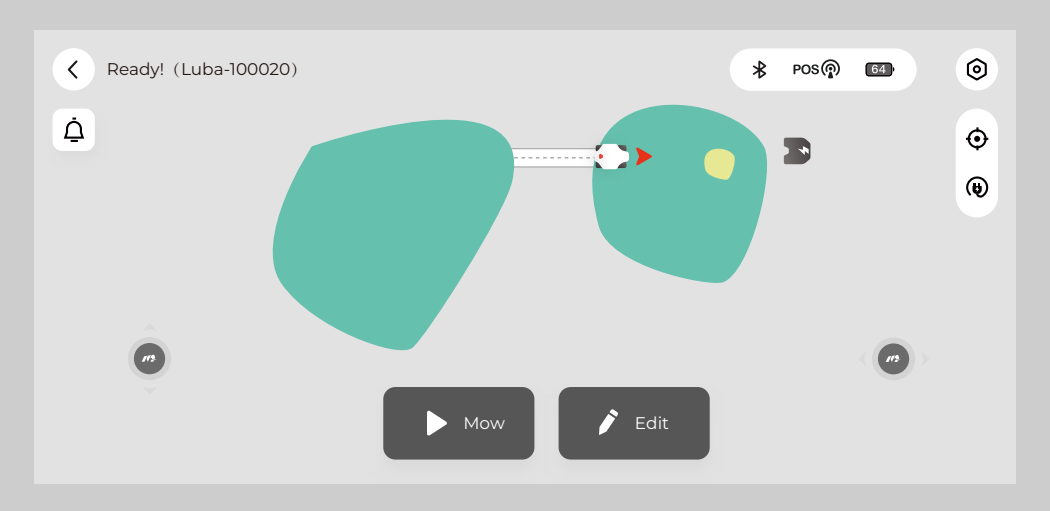

Note:

You need to first drive LUBA into an already existing task area to create a connection path (channel) or a no go zone, because they (or part of them) must be within the task area.
You first need to drive LUBA out of the already existing task area to create a new task area.
If the two task areas overlap then after creation, the overlapping part will just belong to the 1st area.
For any single task, there should be at least one connection path between the different areas
We highly recommend you set pools, flowerbeds, trees, roots, ditches and other potential permanent obstacles/things in the lawn as no-go zones.

6.If the charging station is very close to one of the task areas and the “recharging area” is connected to this task area (as shown below), there does not need to be a connection path between the task area and charging station.

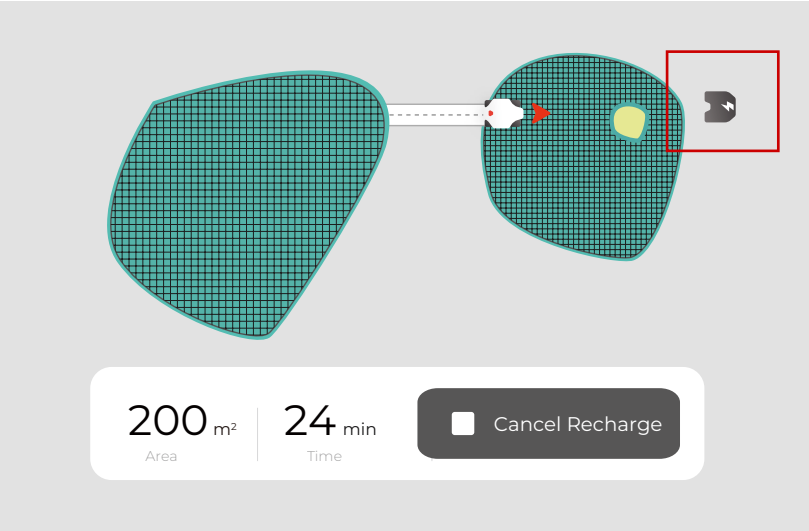

If the dotted “recharging area” is not connected to any of the task area, then a connection path (channel) between them is needed.

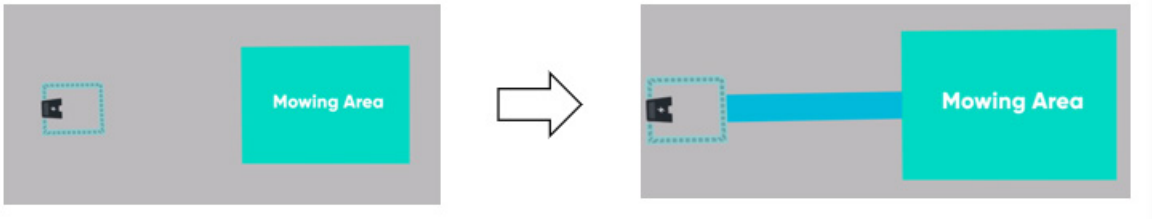

7.Once all task areas, no-go zones, and connection paths are created, the task map is successfully finished. When nothing is selected, the task map is green, as shown below:

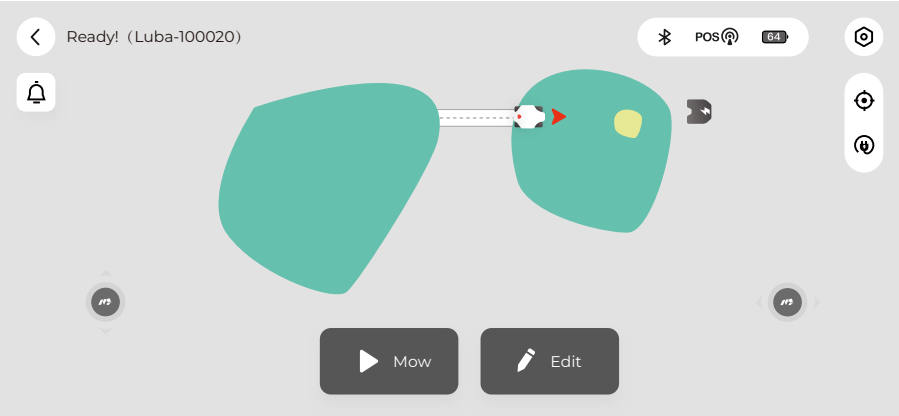

7.3 Edit the task map

1.Click “Edit” to edit the task map. Currently, you can only add areas, no-go zones, connection path to an already existing task map, you cannot delete and change the boundary or path, but we are working on implementing this in a future release.

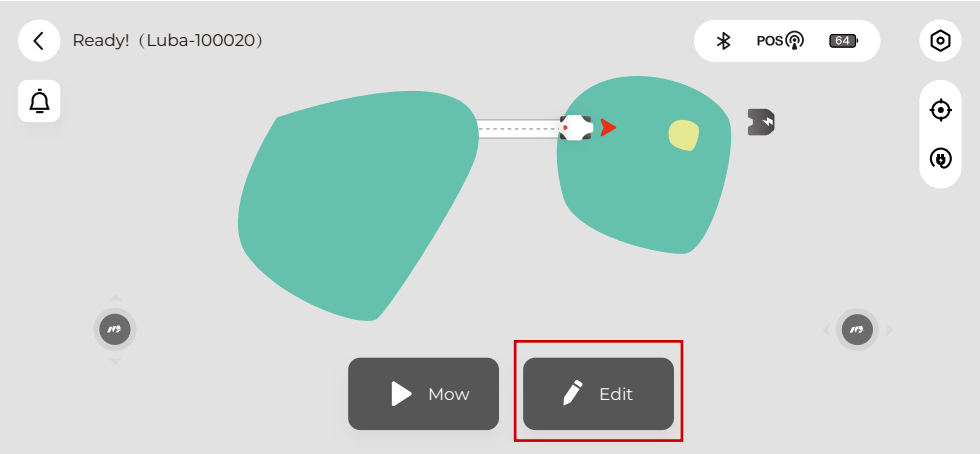

2.However, you can delete the whole task map for now.

Note:

1.Make sure the height of grass in your lawn is max. 10 cm (approx. 4 inches). If the grass height in your lawn is higher than 10 cm (approx 4 inches), please cut the grass to less than 10 cm (approx.. 4 inches) first. This is shown in the guide below.
2.Also remember to clear items from the lawn and keep your pets and children away from LUBA when LUBA is working.

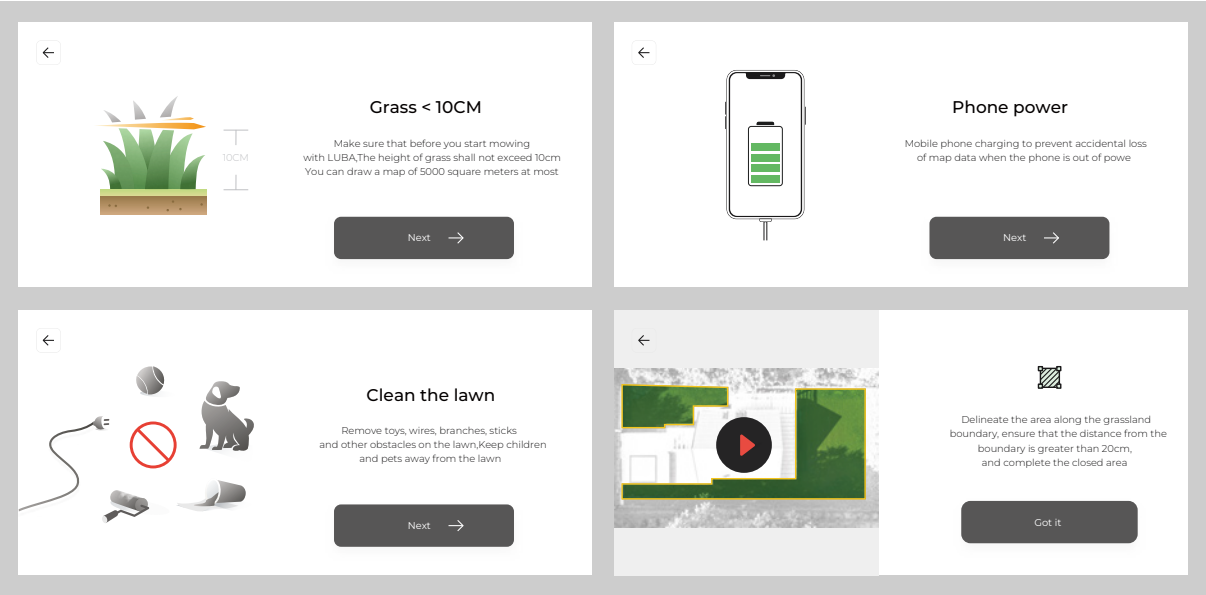

3.If the grass height is greater than 60mm, we recommend you to set the cutting height higher than 40mm, please make sure that each time you carry out mowing, only about 1/3 height of the grass is cut (e.g. if your original grass height is 60mm, set the cutting height of LUBA 40 or 45mm; if your original grass height is 90-100mm, set the cutting height of LUBA to 60mm.)

4.If any unexpected issue occurs, press the STOP button and lock LUBA. The STOP button has the highest priority of any command.

5. If the lift sensor is triggered, LUBA will stop. Please press the grass cutting button and then the start button to unlock LUBA.
6. Please mow your task area no more frequently than once a day. Too frequent mowing may do harm to your lawn.

8.Parameter & Schedule setting and Start Task

8.1 Work Setting interface.

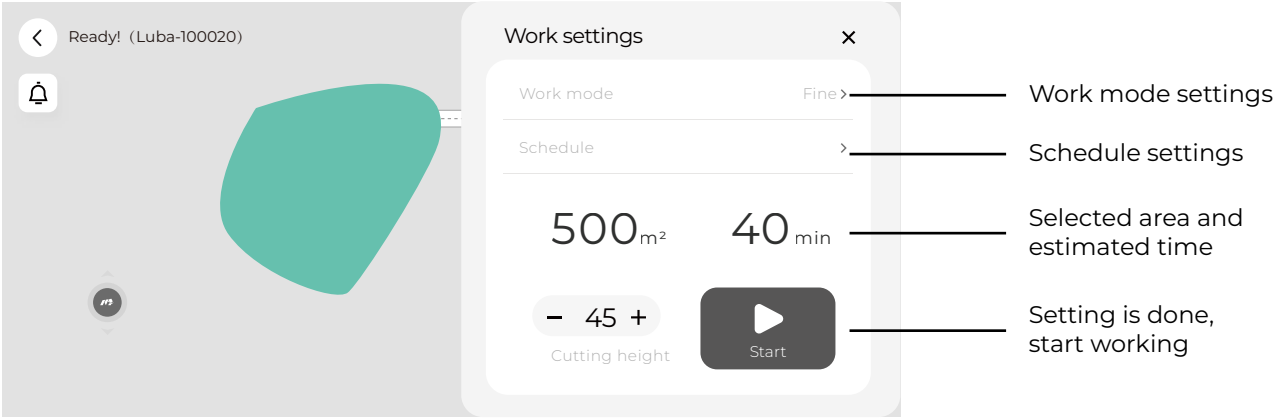

8.2 Work mode settings

1.Once the task area is set, you can click “Mow” to set the working parameters and then start scheduling or mowing.

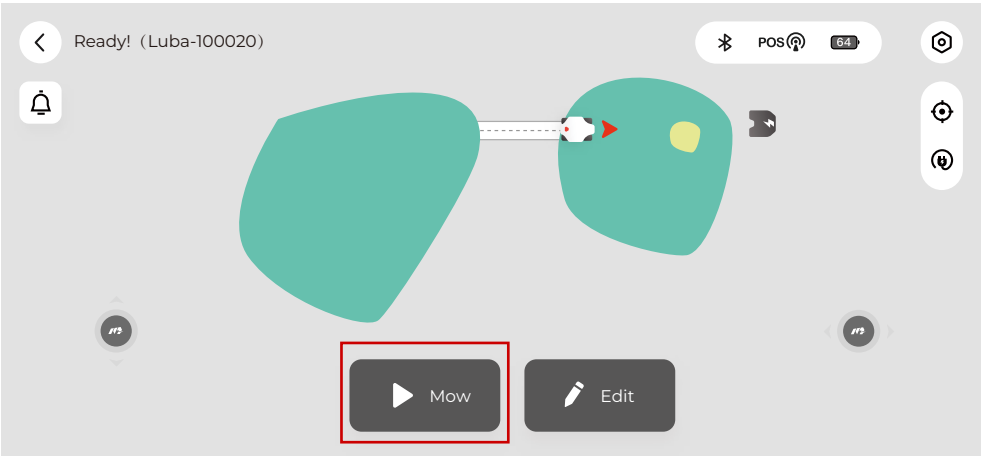

2.When setting the task parameters, you need to select at least one task area of the task map (the area will change from green to blue when selected); if no area is selected then this results in all the areas being loaded together:

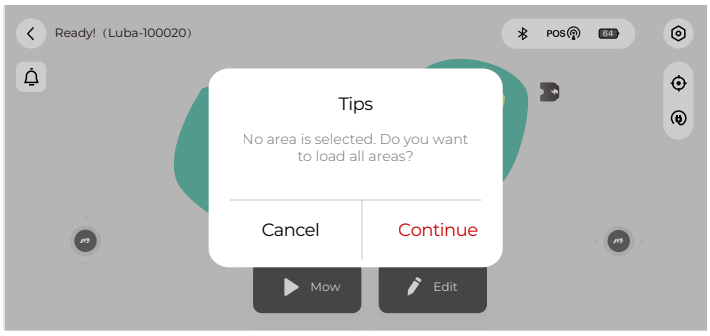

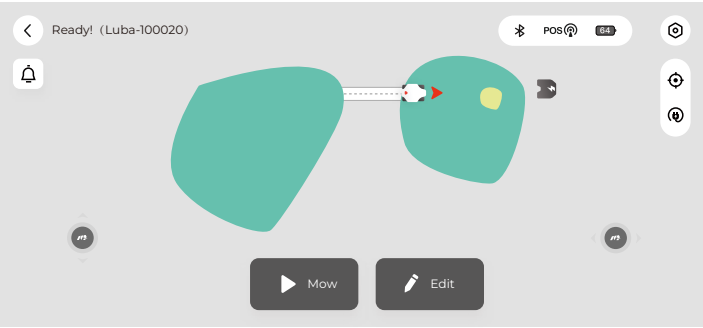

3.The parameter settings menu for the task is as below. There are three pre-defined task modes and also a customized mode which lets customers define each task parameter individually.

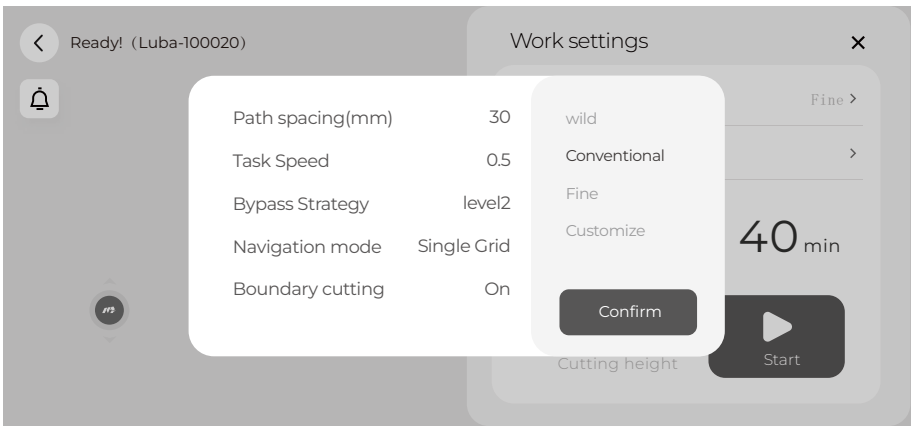

MODE	Description	User case
Wild mode	Only use bumper to detect the obstacle,because too much high grass can disturb the detection of ultrasonic sensor.Single grid mowing path	For lawns not cut for long the height of the grass is normally higher than 12cm;The goal of cutting is just to cut grass down.
Conventional mode	Cut with higher speed than fine mode, and wider path spacing and single grid mowing path(which means more easy to left some grass uncut especially for thick and dense grass).	For normal home lawns,the cutting result is not that fine for lawns with strong and dense grass but with higher effciency than Fine mode
Fine mode	Cut with low speed(0.3m/s) and more narrow path spacing with double grid mowing path.	For normal home lawns. Cut the grass fine but with lower effciency.
Customizes mode	Customer can define every task parameter	For more customized use

Options	Description	recommend value
Path spacing(cm) (the unit on App is wrong)	The distance between 2 adjacent mowing path. Considering our cutting width is 40cm, if we set this to 30cm, the overlap part between2 adjacent mowing path would be 10cm,if no positioning error(which is not possible)	20-30
Task speed	The speed of LUBA when mowing,lower speed gives better result for dense and thick grass, but with lower efficiency.	0.3-0.5
Bypass strategy (the explaination on APP is wrong, is fixing now)	Off: bypasses the obstrucle(not set as nogo zone) once the front bumper is triggered(do not use ultrasonic sensor),Level 1:slow down when ultrasonic sensor detected some-thing.bypasses the obstrucle(not set as nogo zone) once the front bumper is triggered Level 2:bypasses the obstrucle(not set as nogo zone) once detected by ultrasonic sensors.	OFF" is normally in wild mode.Level 1" is normally used when there is some high grass need to be cut in the lawn, or when the lawn is not that flat Level 2" is normally used for flat and well cut lawn.
Navigation mode	Mowing path mode: double grid or single grid	single grid for more efficient cutting.double grid for more detailed cutting
Boundary cutting	Cut 2 or 3 mowing path along the boundary if it is "On”	for more open sky area at boundary, were commend On", but if the lawn is mostly with high walls/ buildings at the boundary, better "off
Path angle	you can change the cutting path in different directions.	

4.After click “ confirm”, the task parameter is set.

8.3 Schedule settings

1.select the area you want to set the schedule

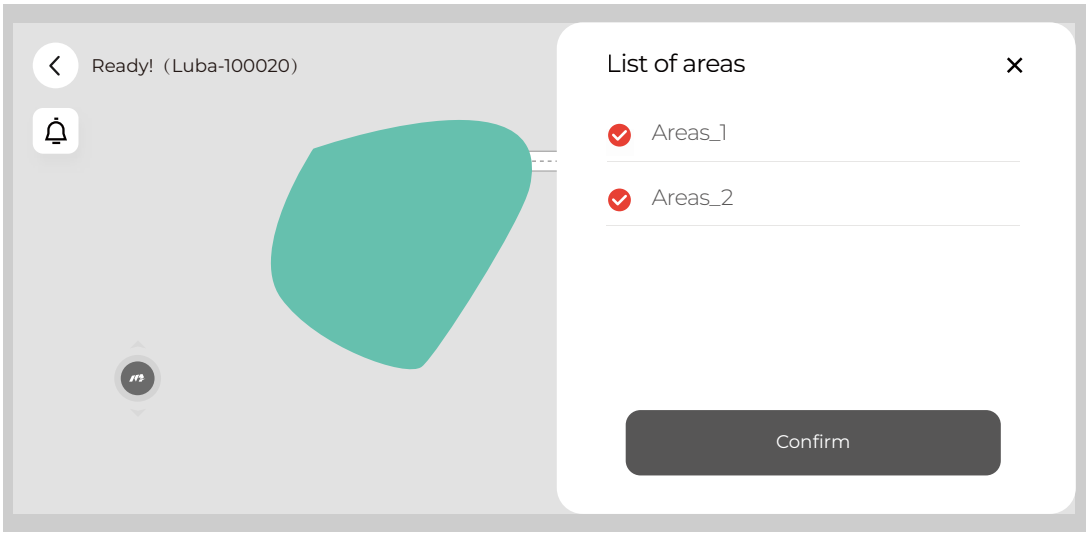

2.set the date in each week and the start time of the selected date you want LUBA to work.

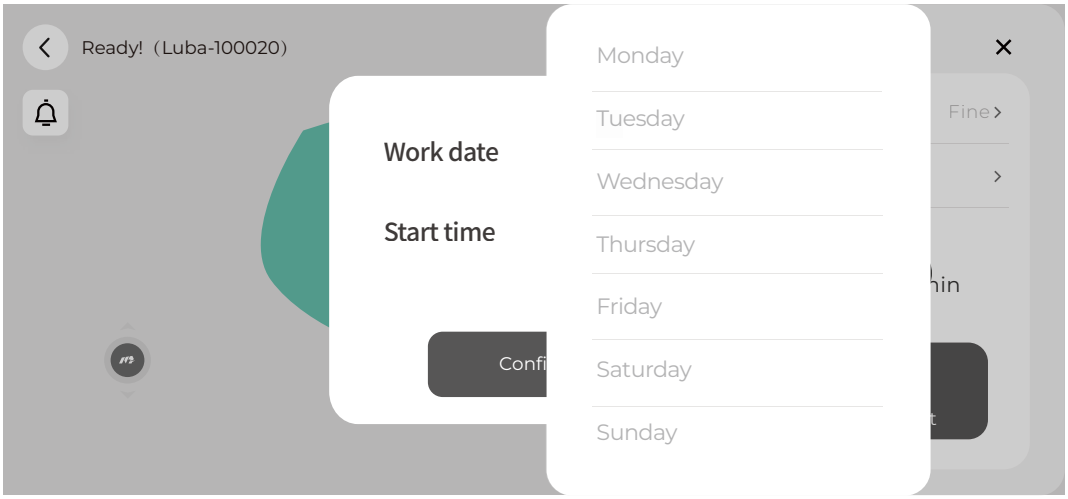

3.For the first time you use LUBA, we highly recommend you to set the cutting height higher than 50mm.

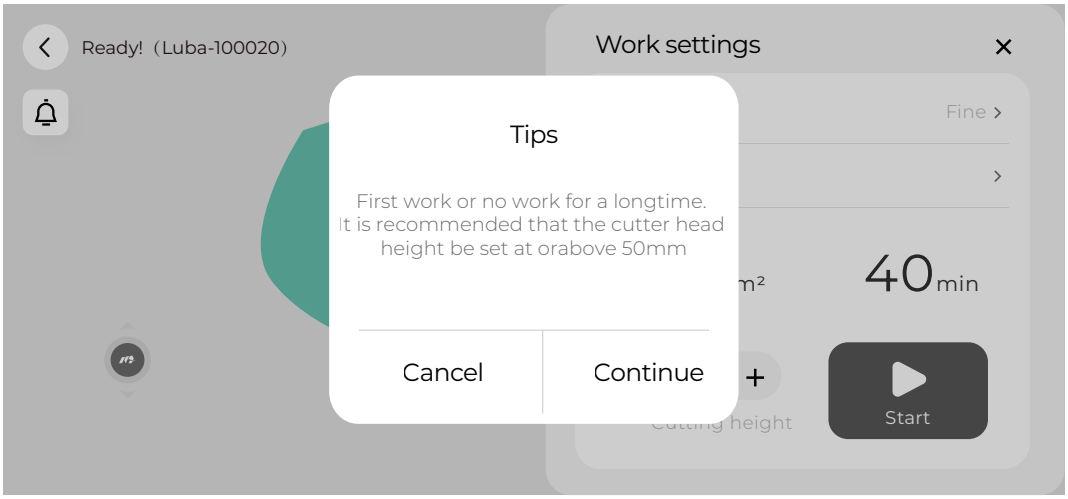

4.The schedule of each task will be shown in the schedule sheet.

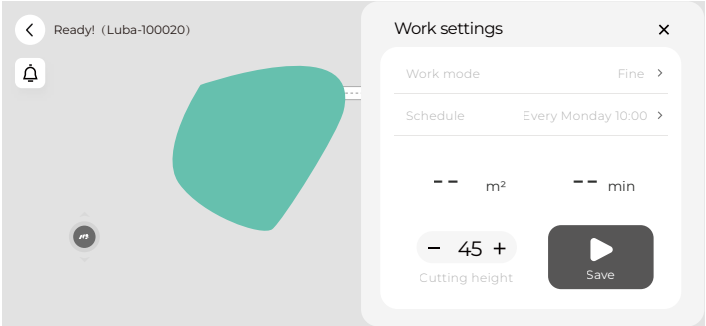

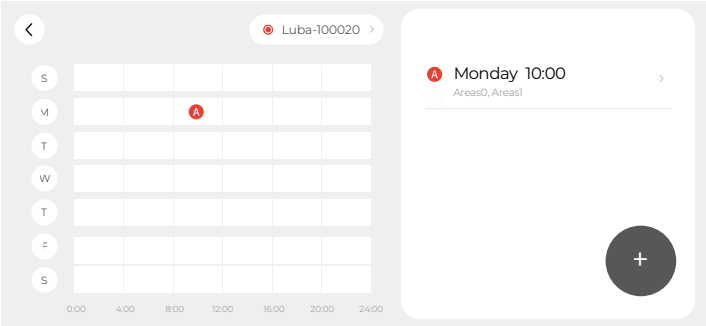

9.Cutting blades replacement

The cutting blades can be replaced when they are damaged or worn out. We recommend you change the blades every six months.

Tools needed： M2.5 Allen Key.

The LUBA MUST BE TURNED OFF when replacing, inspecting, or cleaning the cutting blades.
Make sure the blades are fixed securely and flexibly.

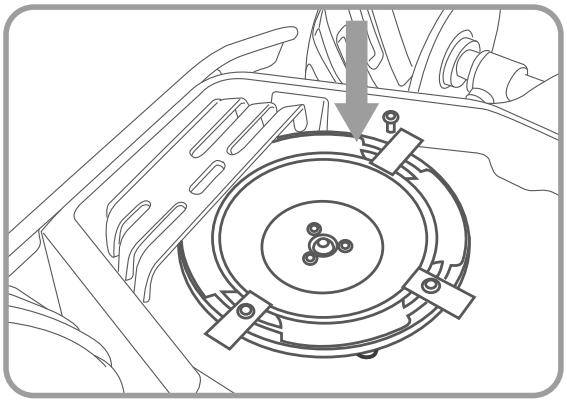

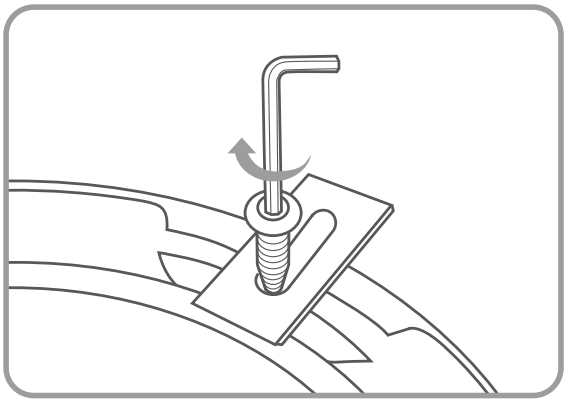

Note:

1.All the cutting blades are recommended to be replaced at the same time when the mowing result does not look as good as the previous performance.
2.The blades are recommended to be replaced every three months or 150hours of mowing. For some thick grass, the cutting blade may need to be replaced more frequently.

10. Specifications:

EN

Specifications	LUBA AWD 5000	LUBA AWD 3000	LUBA AIR 1000
Lawn Size	53,820 ft²	32,292 ft²	10,764 ft²
Engine	All-Wheel Drive(AWD)	All-Wheel Drive(AWD)	All-Wheel Drive(AWD)
Max Climbing Ability	75% Slope	65% Slope	45% Slope
Vertical Obstacle Passing Ability	2 Inches	2 Inches	2 Inches
Cutting Height	1.2-2.6 Inches	1.2-2.6 Inches	1.2-2.6 Inches
Cutting Width	15.75 Inches	15.75 Inches	15.75 Inches
Area Capacity Per Hour, Max	5,382 ft²	3,767 ft²	1,615 ft²
Battery Capacity	10 Ah	10 Ah	4.5 Ah
Typical Charging Time	150 Minutes	150 Minutes	150 Minutes
Mowing Time on One Charge	3 Hours	3 Hours	3 Hours
Charging system	Automatic	Automatic	Automatic
Battery Type	Lithium-ion	Lithium-ion	Lithium-ion
Virtual Boundary	Yes	Yes	Yes
Auto-Navigation	Yes	Yes	Yes
Planned Cuting Route	3 Modes	3 Modes	3 Modes
Max Zone Management	10	6	3
Obstacle Detection and Avoidance	Yes	Yes	Yes
No-go Zone	Yes	Yes	Yes
Rain Sensor	Yes	Yes	Yes
Connectivity	Bluetooth®, Wi-Fi	Bluetooth®, Wi-Fi	Bluetooth®, Wi-Fi
User Interface	Mammotion App	Mammotion App	Mammotion App
Mowing Schedule	Yes	Yes	Yes
Firmware Update	FOTA	FOTA	FOTA
GPS Anti-Theft	Yes	Yes	Yes
Lift Sensor	Yes	Yes	Yes
Tilt Sensor	Yes	Yes	Yes
Waterproof Level	IPX6	IPX6	IPX6
Noise Level	60 dB	60 dB	60 dB

11. Aftersales Policy:

EN

11.1 Cuetomer services flow

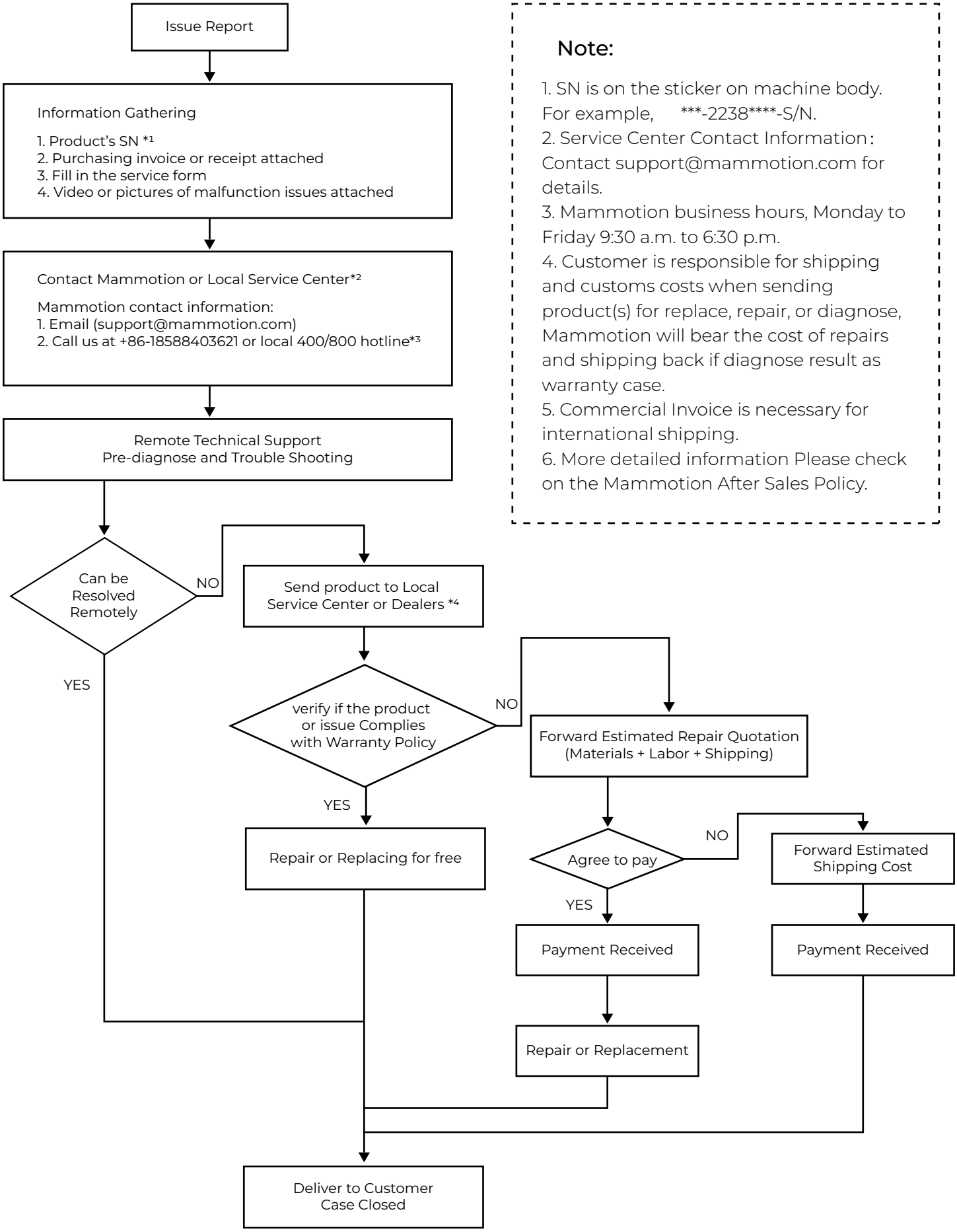

Note:

1. SN is on the sticker on machine body. For example, ***-2238****-S/N.
2. Service Center Contact Information: Contact support@mammotion.com for details.
3. Mammotion business hours, Monday to Friday 9:30 a.m. to 6:30 p.m.
4. Customer is responsible for shipping and customs costs when sending product(s) for replace, repair, or diagnose, Mammotion will bear the cost of repairs and shipping back if diagnose result as warranty case.
5. Commercial Invoice is necessary for international shipping.
6. More detailed information Please check on the Mammotion After Sales Policy.

11.2 Part I - limted Warranty

These MAMMOTION After-Sales Policies (these “Policies”) only apply to MAMMOTION products you purchased from MAMMOTION authorized retailers or MAMMOTION directly for your own use and not for resale.
By using your MAMMOTION product, you agree to be bound by these Policies. If you are not eligible or do not agree to any of the Terms, do not use your MAMMOTION product.
When receiving service, MAMMOTION is responsible for loss or damage to your product only while it is in MAMMOTION's possession or in transit, if MAMMOTION is responsible for transportation.
MAMMOTION is not responsible for loss or disclosure of any data, including confidential information, proprietary information, or personal information, contained in a product.

What Will MAMMOTION Do

MAMMOTION will attempt to diagnose and resolve your problem by telephone, e-mail or online chat. MAMMOTION may direct you to download or install particular software updates. If your problem cannot be resolved over the telephone or through the application of software updates, you may be required to deliver the product to MAMMOTION for further examination or to MAMMOTION’s locally appointed service centers.

What This Limited Warranty Does NOT Cover

All the damages caused by misuse or not following the user manual and below：
1) Third party claims against you for damages
2) Loss, damage or disclosure of your data
3) Special, incidental, punitive, indirect or consequential damages, including but not limited to lost profits, business revenue, goodwill or anticipated savings. In no case should the total liability of MAMMOTION, its affiliates, suppliers, resellers, or service providers for damages from any cause exceed the amount of actual direct damages, not to exceed the amount paid for the product.

Product and Part Replacement

When after-sales service involves the replacement of a product or part, the replaced product or part becomes MAMMOTION’s property and the replacement product or part becomes your property. Only unaltered MAMMOTION products and parts are eligible for replacement.
Replacement products or parts provided by MAMMOTION may not be new, but it will be in good working order and at least functionally equivalent to the original product or part’s warranty.
A replacement product or part shall be covered for the time remaining in the original product’s warranty.

11.3 Part II – Warranty

Under this Limited Warranty, MAMMOTION warrants that each MAMMOTION product that you purchase will be free from material and workmanship defects under normal use in accordance with MAMMOTION’s published product materials during the warranty period. MAMMOTION’s published product materials include, but are not limited to user manuals, quick start guide, maintenance, specifications, disclaim, and in-app notifications. The warranty period varies for different products and parts. Please check in below table to verify the duration of the warranty for your particular product or parts.

1.The warranty period for a product starts on the day such products are delivered.
2.If you cannot provide an invoice or other valid proof of purchase, then the warranty period will begin 90 days after the production date shown on the product, unless otherwise agreed upon between you and MAMMOTION.
3.MAMMOTION will need users to arrange the shipment by themselves if users would like to send the products to local service center or MAMMOTION factory for further diagnosis. MAMMOTION will repair or replace and send back to users at no cost if the problem falls under this Limited Warranty. If not, MAMMOTION or designated service center may charge a fee accordingly.
4.MAMMOTION guarantees that, subject to the following conditions, Warranty Repair Service can be requested. Please contact MAMMOTION or your authorized MAMMOTION dealer for more details. You will be required to fill out a repair form or RMA (Return Material Approval), which should be sent to us along with the to-be-repaired unit.
5.DOA (dead-on-arrival, defective-on-arrival, and/or damaged-on-arrival), refers to goods that are defective on arrival. After receiving goods from MAMMOTION, or the authorized dealer, if the product appears to be damaged or has performance failure(s), please contact MAMMOTION or your authorized MAMMOTION dealer to identify and confirm if a replacement is needed.
6.Replacement applies to DOA cases. It should be requested within 7 calendar days of receiving the goods. The replacement will be completed within 30 calendar days upon receipt of the completed goods, including all original accessories, attachments and packaging.
RMA (Return Material Approval), please fill out the form provided by MAMMOTION, Scan and Email to support@mammotion.com.

What to do Before Obtaining After-sales Service

1.Follow the procedures specified by MAMMOTION as shown in the “MAMMOTION General Customer Services Flow” part. Backup all data contained on your product by yourself.
2.Except for drive logs, remove all data, including confidential information, proprietary information, and personal information from the product. Or, if you are unable to remove any such information, modify the information to prevent its access by other party so that it is not personal data under applicable law. MAMMOTION shall not be responsible for the loss or disclosure of any data, including confidential information, proprietary information, or personal information, on a product returned or accessed for warranty service.
3.Provide MAMMOTION with all system passwords, if necessary. Provide MAMMOTION with sufficient and safe access to your product, so MAMMOTION can provide service as needed.
4.Remove all additional parts, alterations, and attachments not covered under warranty.
5.Ensure that the product or part is free of any legal restrictions that prevent its replacement.
If you are not the owner of a product or part, obtain authorization from the owner for MAMMOTION to provide warranty service.

12.How to Obtain Warranty Service

If a product does not function as warranted during the warranty period, you may obtain after-sales service by contacting MAMMOTION’s local dealer or through support@mammotion.com. You will need to provide valid proof of purchase, receipt or order number (for MAMMOTION Direct Sales) along with the serial number of your products for the warranty service. Charges may apply for services not covered by this Limited Warranty. Please contact MAMMOTION for information specific to your location.
Please note that the warranty service is only available in the respective MAMMOTION service regions where you purchased your MAMMOTION product.

Table for parts warranty:

Model	LUBA	
Component		Limited warranty period
Main body		2 years
Battery		2 years
Accessories	Charging station &RTK antenna	1 years
Wearing parts	Tire	No warranty
	Decoration/Appearance parts	No warranty
	Cutting blade	No warranty

*MAMMOTION reserves the rights of interpretation for this Limited Warranty and may not be able to notify each user when updates happen. Refer to the official website for any details and updates.

Your Other Rights
This Limited Warranty provides you with extra and specific legal rights. You may have other rights according to the applicable laws of your state or jurisdiction. You may also have other rights under a written agreement with MAMMOTION. Nothing in this Limited Warranty affects your statutory rights, including the rights of consumers under laws or regulations governing the sale of consumer products that cannot be waived or limited by agreement.

13.Maintenance Guide

In order to have your LUBA in a good condition at all time, please clean your LUBA each time after mowing. The cleaning process in MAMMOTION user manual instructs you to get rid of the clippings, twigs, leaves or dust and keep the mower in good condition.

1.Motors and cutting blades maintenance (After Every Mowing task)

1.1 Turn off the mower and flip it over on a relatively soft surface ground. Then find a tool to clean the clippings, twigs or leaves from the bottom of mower. Make sure the cutting blade disks are clean and will not get stuck.
1.2 If the mower is to be stored for a long time, it will be better to add anti-rust oil on the cutting blades after cleaning.
1.3 Keep the hub motors shaft dry and clean for long-term storage.
1.4 The cutting blades are recommended to be replaced every 3 months or 150hours mowing.

2.Battery Maintenance

2.1 Keep 50% to 60% battery level before long term storage.
2.2 Charge to full once every 90 days.
2.3 Clean and make sure the charging ports on the mower are dry and clean after very mowing task.

3.Appearance maintenance (After Every Mowing task)

1.1 Clean the cover and the wheels with fresh water and make sure there are no clippings or dust covering on it.
1.2 When there is damage on it, please replace the broken parts as possible.

4.Replace Blades

1.1 If the mower is used on a regular basis, it is recommended to replace the blades and screws every 50-100 hrs to ensure safety and better mowing results. Replace all blades and their screws at the same time for a safe cutting system.
1.2 Wear heavy gloves when you inspect or replace the blade.
1.3 Only use the right type of screws and original blades as approved by Mammotion.
1.4 DO NOT reuse the screws. Doing so can cause serious injury.

14.Disclaimer

We provide customers with after-sale services, excluding the following circumstances:
1.Crashes damage caused by non-manufacturing factors, including but not limited to, user errors.
2.Damage caused by unauthorized modification, disassembly, or shell opening not in accordance with official instructions or manuals.
3.Damage caused by improper installation, incorrect use, or operation not in accordance with official instructions or manuals.
4.Damage caused by a non-authorized service provider.
5.Damage caused by unauthorized modification of circuits and/or mismatch or misuse of the battery and charger.
6.Damage caused by users who do not follow instructions and manual recommendations.

7.Damage caused by operation in bad lawn conditions (i.e. large areas of puddle without setting no-go-zones, a lot of stones covering on it, etc.)
8.Damage caused by operating the product in an environment with electromagnetic interference (i.e., in mining areas or close to radio transmission towers, high-voltage wires, substations, etc.).
9.Damage caused by operating the product in an environment suffering from interference from other wireless devices (i.e. transmitter, video-downlink, Wi-Fi signals, etc.).
10.Damage caused by reliability or compatibility issues when using unauthorized third-party parts.
11.Damage caused by operating the unit with a low-charged or defective battery.
12.Loss of, or damage to, your data by a product.
13.Any software program, whether provided with the product or installed subsequently.
14.Failure of, or damage caused by, any third-party products, including those that MAMMOTION may provide or integrate into the MAMMOTION product at your request.
15.Damage resulting from any non-MAMMOTION technical or other support, such as assistance with “how-to” questions or inaccurate product set-up, installation, and firmware upgrade.
16.Damage caused by operating the MOWER in the sensitive zone (military, natural resource protection zoning, etc.)
17.Damage caused by unpredictable factors (cars, wild animal attacks, flood, etc.)
18.Products or parts with an altered identification label or from which the identification label has been removed.
For more information, please check our website for tuition videos, or read FAQ in MAMMOTION APP/Help/FAQ.
https://MAMMOTION.com/
This content is subject to change without prior notice.

FCC Warning

This device complies with part 15 of the FCC rules. Operation is subject to the following two conditions: (1) this device may not cause harmful interference, and (2) this device must accept any inte rference received, including interference that may cause undesired operation.

Changes or modifications not expressly approved by the party responsible for compliance could void the user's authority to operate the equipment.

NOTE: This equipment has been tested and found to comply with the limits for a Class B digital device, pursuant to part 15 of the FCC Rules. These limits are designed to provide reasonable protection against harmful interference in a residential installation. This equipment generates uses and can radiate radio frequency energy and, if not installed and used in accordance with the instructions, may cause harmful interference to radio communications. However, there is no guarantee that interference will not occur in a particular installation. If this equipment does cause harmful interferenceto radio or television reception, which can be determined by turning the equipment off and on, the user is encouraged to try to correct the interference by one or more of the following measures:

- Reorient or relocate the receiving antenna.
- Increase the separation between the equipment and receiver.
- Connect the equipment into an outlet on a circuit different from that to which the receiver is connected.
- Consult the dealer or an experienced radio/TV technician for help.

Radiation Exposure Statement

This equipment complies with FCC radiation exposure limits set forth for an uncontrolled environment. This equipment should be installed and operated with minimum distance 20cm between the radiator and your body.

ISED Statement

- English: This device complies with Industry Canada license - exempt RSS standard(s). Operation is subject to the following two conditions: (1) This device may not cause interference, and (2) This device must accept any interference, including interference that may cause undesired operation of the device.

The digital apparatus complies with Canadian CAN ICES - 3 (B)/NMB - 3(B).

- French: Le présentappareilestconforme aux CNR d'Industrie Canada applicables aux appareils radio exempts de licence. L'exploitationestautorisée aux deux conditions suivantes: (1) l'appareil ne doit pas produire de brouillage, et (2) l'utilisateur de l'appareildoit accepter tout brouillageradioélectriquesubi, mêmesi le brouillageest susceptible d'encompromettre le fonctionnement.

l'appareil numérique du ciem conforme canadien peut - 3 (b) / nmb - 3 (b).

This device meets the exemption from the routine evaluation limits in section 2.5 of RSS 102 and compliance with RSS 102 RF exposure, users can obtain Canadian information on RF exposure and compliance.

cet appareil est conforme à l'exemption des limites d'évaluation courante dans la section 2.5 du cnr - 102 et conformité avec rss 102 de l'exposition aux rf, les utilisateurs peuvent obtenir des données canadiennes sur l'exposition aux champs rf et la conformité.