KRUISEE 角见

KR S50

SPECIFICATION MANUAL

Facilitate the pan robot industry to march towards the new era of intelligence

1.Please note that changes or modifications not expressly approved by the party responsible for compliance could void the user’ s authority to operate the equipment.
2.This equipment has been tested and found to comply with the limits for a Class B digital device, pursuant to part 15 of the FCC Rules. These limits are designed to provide reasonable protection against harmful interference in a residential installation. This equipment generates, uses and can radiate radiofrequency energy and, if not installed and used in accordance with the instructions, may cause harmful interference to radio communications. However, there is no guarantee that interference will not occur in a particular installation. If this equipment does cause harmful interference to radio or television reception, which can be determined by turning the equipment off and on, the user is encouraged to try to correct the interference by one or more of the following measures:
—Reorient or relocate the receiving antenna.
—Increase the separation between the equipment and receiver.
—Connect the equipment into an outlet on a circuit different from that to which the receiver is connected.
—Consult the dealer or an experienced radio/TV technician for help

KRUISEE 角见

Facilitate the pan robot industry to march towards
the new era of intelligence

www.kruisee.cn

All data sources in this manual comes from: Ecovacs Laboratory

CONTENTS

PRODUCT INTRODUCTION 01

Product overview 01

Product features 01

Application scenario 02

SPECIFICATION PARAMETERS 03

HARDWARE CHARACTERISTICS 04

Operating principle 04

Optical properties 04

Communication and interface 04

DEVELOPMENT TOOLS AND SUPPORT 05

OUTLINE STRUCTURE AND INSTALLATION DIMENSIONS 07

PRODUCT INTRODUCTION

Product overview

KR S50 Lidar is a single-point scanning product designed based on the TOF principle. It can output 14.4K~28.8K point cloud data per second, and can realize 50-meters ranging. It adopts 905nm infrared laser, with self-developed signal processing algorithm and can meet the needs of various application scenarios. Equipped with integrated interface and Ethernet for point cloud data transmission, the product is dustproof and waterproof up to IP65 level. The product has a compact design which makes it easy to integrate, and provides a complete integrated development interface, enabling a wide range of application scenarios such as commercial robots, multimedia interaction, and AIOT.

This product is developed based on the principle of pulse TOF ranging, and is equipped with related optics, electronics, and algorithm design to achieve high frequency, high-precision and long-distance measurement. While measuring the distance, the mechanical structure rotates 360 degrees to continuously obtain angle information, thus realizing 360 degree scanning ranging and outputting point cloud data of the scanned environment.

Output
14.4K/28.8K
point cloud data per second

Meet customer’s
50m
measurement requirements

905nm
infrared laser

Product features

- IP65 class dustproof and waterproof
- 360-degree sweep
  10-20Hz optional scan frequency
- High-speed ranging
  Ranging frequency 14.4~28.8 kHz
- High ranging stability and accuracy
- Strong resistance to ambient light interference
- Optical and magnetic fusion technology
  Wireless communication
- Industrial brushless motor
- Laser power meets Class I laser safety standards

Application scenario

Commercial robot navigation and obstacle avoidance

Digital multimedia interaction

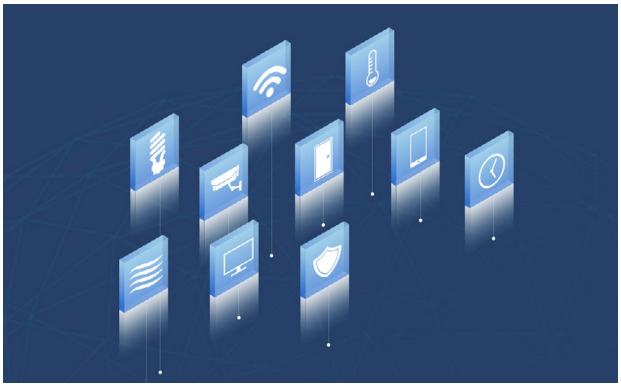

AIOT

SPECIFICATION PARAMETERS

S50-Product specifications

Item	Spec	Unit
Ranging Scope	Min:0.1 Max:50 (80% Reflectivity)	m
Distance Accuracy	±3	cm
Distance Standard Deviation	<1	cm
Sampling Frequency	14.4~28.8（Optional）	kHz
Scanning Frequency	10~20（Optional）	Hz
Angular Resolution	0.25	Degree
Direction of Rotation	Counter-clockwise	/
Angle Range	360	Degree
Operating Voltage	12±5%	V（DC）
Operating Current	Current ≤ 350	mA
Module Power Consumption	Power consumption ≤ 5	W
Starting Current	2	A
Light Source	Semiconductor laser diode	/
Laser Wavelength	895-915 center 905	nm
Laser Safety Level	IEC60825-1 Class1	/
Ambient Light Suppression	100000	Lux
Operating Temperature	-20~+50	° C
Dustproof and Waterproof Level	IP65	/
Service Life	20000	h
Supply Voltage	12±0.5	V
Interface	100M Ethernet / serial port Baud rate 2M	/
Dimension	Φ61*65	mm

HARDWARE CHARACTERISTICS

Operating principle

Optical properties

Equipped with high-power infrared point pulsed lasers, it meets FDA Class I laser safety standards.

The TOF lidar spot is a horizontally placed ellipse. The vertical divergence angle is 12mrad, and the horizontal divergence angle is 0.5mrad.
The spot size at any distance can be represented by divergence angle * distance + initial spot. For example, the light spot at 10 meters:
Vertical direction at 10 meters: (10*12)/10+1.5 =13.5cm
Horizontal direction at 10 meters: (10*0.5)/10+1.5 = 2 cm

Vertical divergence angle
12mrad

Horizontal divergence angle
0.5mrad

Communication and interface

Ethernet interfaces are adopted, and the lead definitions and signal level requirements of the interfaces are as follows:

The Ethernet interface uses a 100Mb bandwidth network port as a communication interface, which can realize real-time and high-speed transmission of large amounts of data. Network related parameters can be configured through GUI software. The default parameters of the network are as follows:

Project	Unit	Typical value
Bandwidth	bps	100M
Operation mode	/	UDP
IP	/	169.254.119.3
Subnet mask	/	255.255.255.0

Project	Unit	Typical value
	/	169.254.119.1
Gateway address	Radar port	3000
Port	Host port	2000

Serial port: Baud rate: 2M Data bits: 8 Stop bits: 1 No parity bit

DEVELOPMENT TOOLS AND SUPPORT

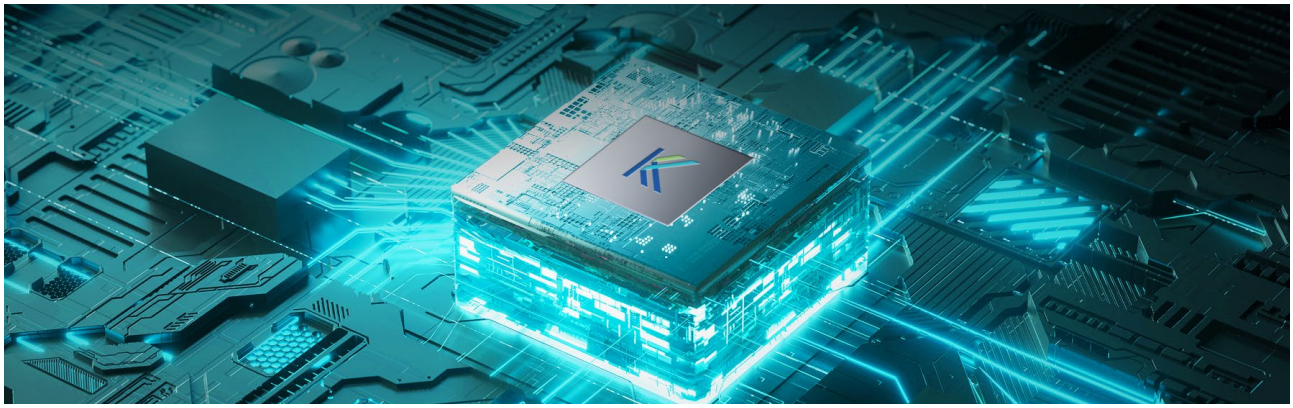

KR S50 series lidar provides SDK suite based on ROS platform and GUI software under Windows platform. The GUI software can process and display lidar point cloud data in real time. It can also demonstrate the radar’s real-time status such as current speed, packet loss rate, usage time and so on. The network IP address, gateway, subnet mask and port can also be modified through the GUI.

1.Before using the GUI, it is necessary to configure the PC IP address and the radar IP in the same network segment, and fill in the corresponding network parameters into the GUI software.

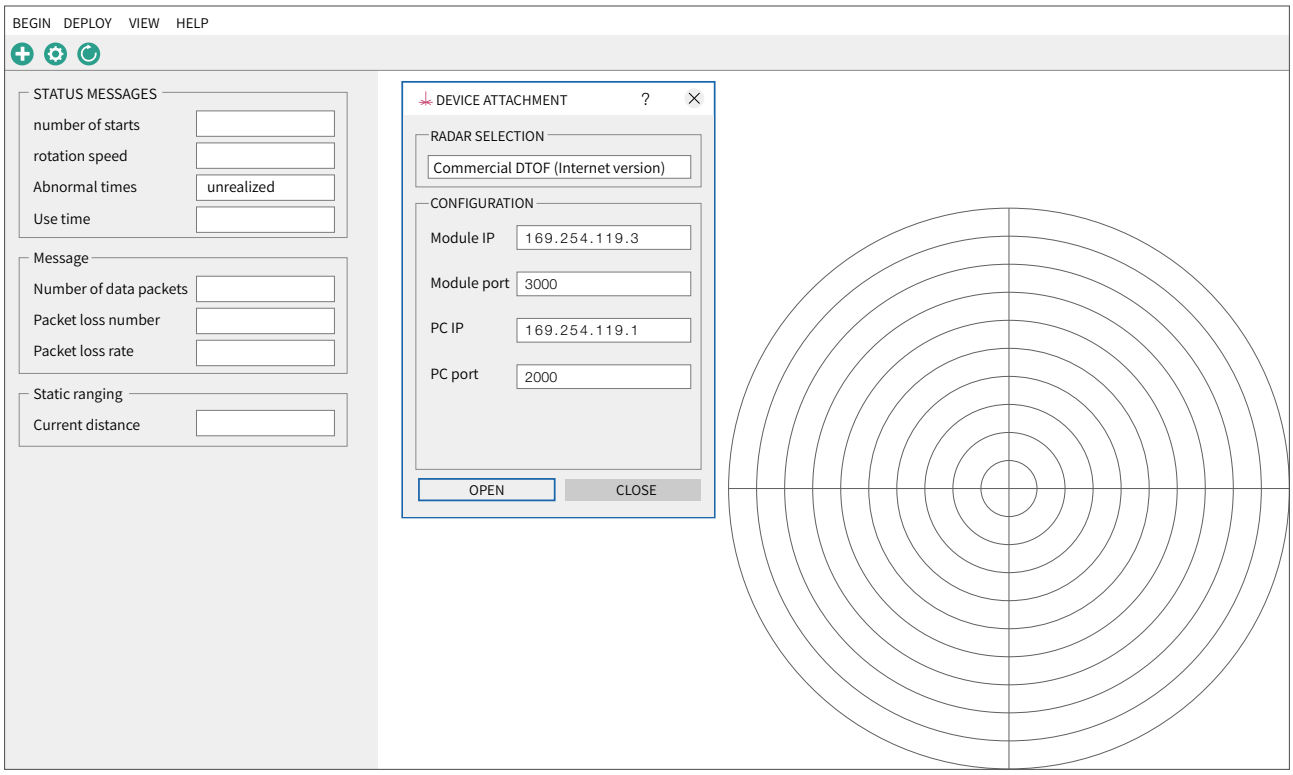

2.When connected to the device, point cloud data and radar status can be displayed in real time.

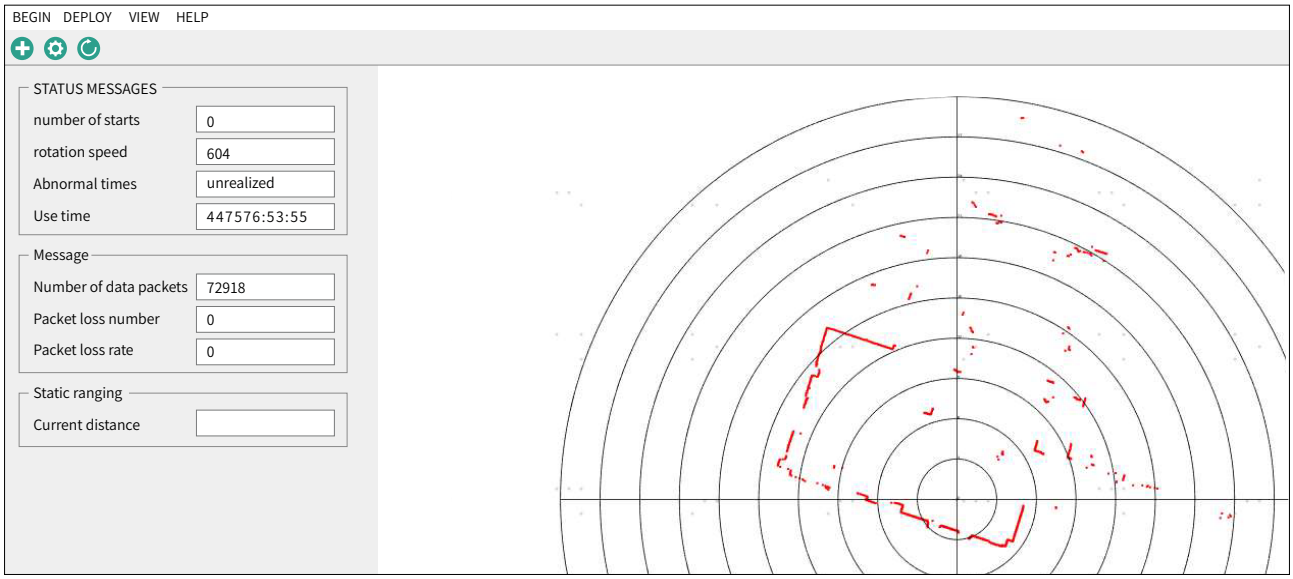

3.The 'dToF Configuration Setting' in the 'Configuration' option in the options bar provides a window to modify network related information.

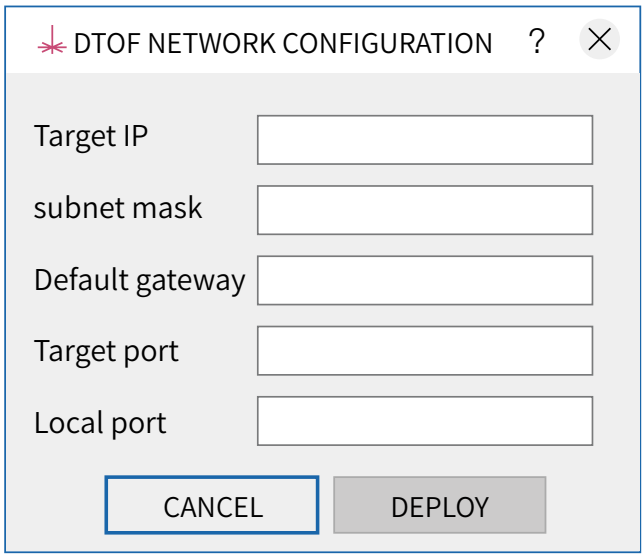

APPEARANCE, STRUCTURE AND INSTALLATION SIZE

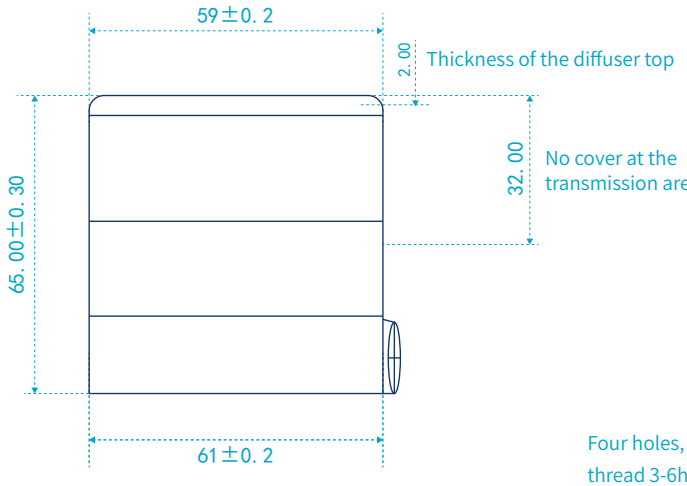

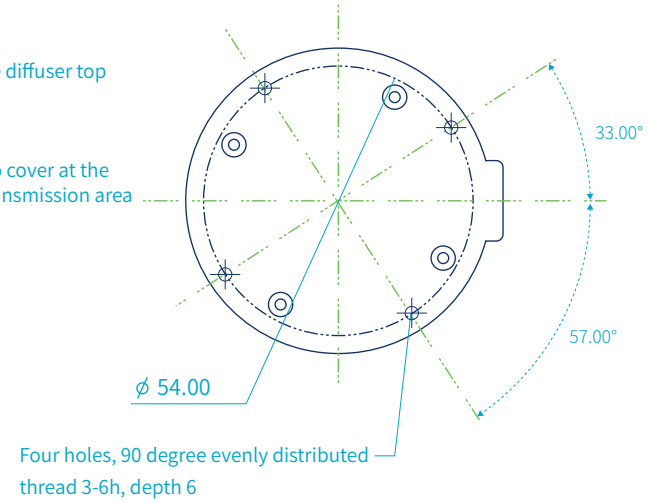

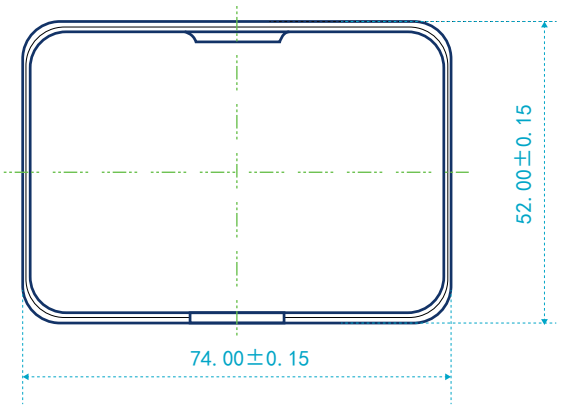

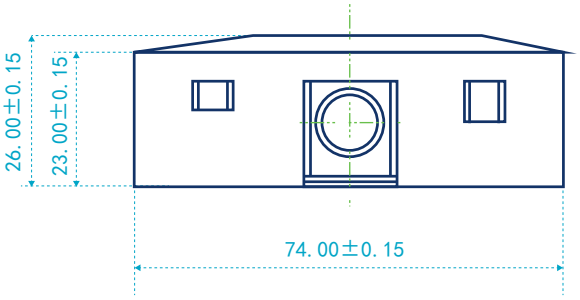

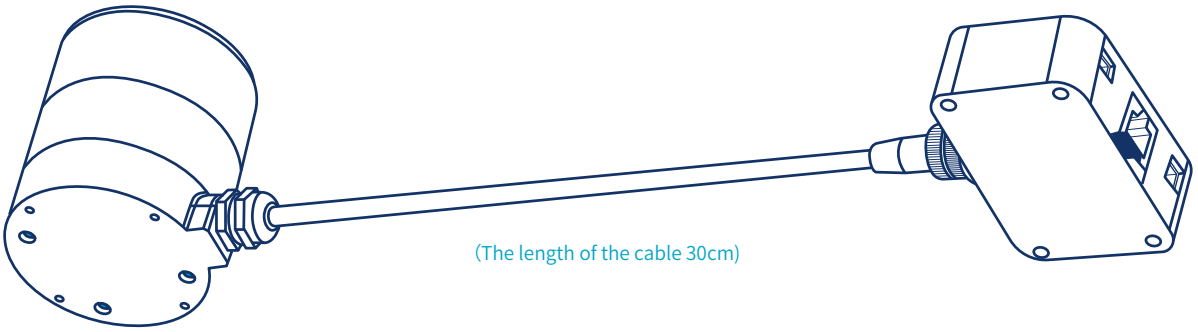

KRUISEE 角见

Address: 5th&6th Flood,Building C2,Hongfeng Science and Technology Park ,Economic&Technological Development Zone,Nanjing,Jiangsu,China

Contact: 18702113700 (Mr. Wang)

Email: sales.info@kruisee.com

Web:www.kruisee.cn