Model.URSB005

Kardio T2S

Spin Bike

USER MANUAL

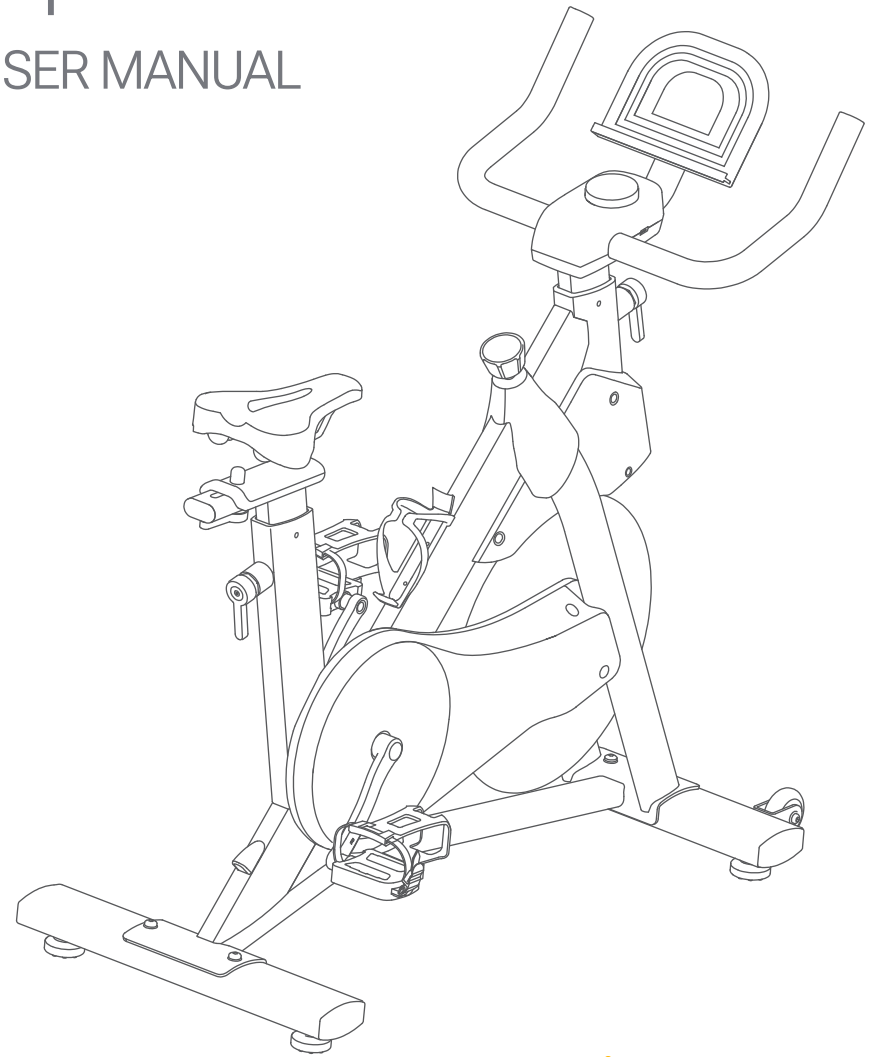

IMPORTANT: Read all instructions carefully before using this product. Retain this owner's manual for future reference. The specifications of this product may vary from this photo, subject to change without notice.

Manufacturer: Shenzhen Yile Dynamic Technology Co., LTD.
Address:131, Shahe Xili, 2-2 Xili North Road, Licheng Community, Xili Street,Nanshan District, Shenzhen City, China

MADE IN CHINA

Version: 1.0

UREVO SPORTS

TABLE OF CONTENTS

01 Customer Serivce

02 Important Safety Guidelines

03 Specifications

04 Parts List

05 Accessories & Tools

06 Assembly

07 Before You Start

08 Operation

09 Trouble Shooting

10 Warranty

1 / CUSTOMER SERIVCE

IMPORTANT: FOR UREVO ONLY

For damaged or defective product, questions, replacement parts or any other service support, please contact our customer service department by the below methods:

Services@urevosports.com

Response Time: 24-48 hours
Emailing us with the Order ID will be the best method to receive a response during peak business hours.

Website: www.urevosports.com

PLEASE DO NOT RETURN THIS PRODUCT WITHOUT ASKING OUR CUSTOMER SERVICE.

2 / IMPORTANT SAFETY GUIDELINES

Read all instructions before using this appliance.

DANGER - To reduce the risk of electric shock: Always unplug this appliance from the electrical outlet immediately after using and before cleaning

WARNING - To reduce the risk of burns, fire, electric shock, or injury to persons:

1 An appliance should never be left-unattended plugged in. Unplug from outlet when not in use, and before putting on or taking off parts.

2 Do not operate under blanket or pillow. Excessive heating can occur and cause fire, electric shock, or injury to persons.

3 Close supervision is necessary when this appliance is used by, on, or near children, invalids, or disabled persons.

4 Use this appliance only for its intended use as described in this manual. Do not use attachments not recommended by the manufacturer.

5 Never operate this appliance if it has a damaged cord or plug, if it is not working properly, if it has been dropped or damaged, or dropped into water. Return the appliance to a service center for examination and repair.

6 Keep the cord away from heated surfaces.

7 Never drop or insert any object into any opening.

8 Do not use outdoors.

9 Do not operate where aerosol (spray) products are being used or where oxygen is being administered.

10 To disconnect, turn all controls to the position, then remove plug form outlet.

11 The appliance is only to be used with the power supply unit provided with the appliance.

12 This appliance is not intended for use by persons with reduces physical, sensory or mental capabilities, or lack of experience and knowledge, unless they have been given supervision or instruction concerning use of the appliance by a person responsible for their safety. Keep children under the age of 13 away from this machine.

13 **Caution** - To reduce the risk of injury from moving parts - Unplug before servicing.

14 **Warning** - To reduce the risk of Electric shock - Unplug before cleaning or servicing.

15 **Warning** - Risk of personal injury - Keep children under the age of 13 away from machine.

16 **Warning**—This stationary training equipment is not suitable for high accuracy purposes.

SAVE THESE INSTRUCTIONS

FCC STATEMENT:

Operation is subject to the following two conditions:

(1) This device may not cause harmful interference, and

(2) This device must accept any interference received, including interference that may cause undesired operation.

Any Changes or modifications not expressly approved by the party responsible for compliance could void the user's authority to operate the equipment.

This equipment should be installed and operated with minimum distance 20cm between the radiator& your body.

Note: This equipment has been tested and found to comply with the limits for a Class B digital device, pursuant to part 15 of the FCC Rules. These limits are designed to provide reasonable protection against harmful interference in a residential installation. This equipment generates, uses and can radiate radio frequency energy and, if not installed and used in accordance with the instructions, may cause harmful interference to radio communications. However, there is no guarantee that interference will not occur in a particular installation. If this equipment does cause harmful interference to radio or television reception, which can be determined by turning the equipment off and on, the user is encouraged to try to correct the interference by one or more of the following measures:

- Reorient or relocate the receiving antenna.
- Increase the separation between the equipment and receiver.
- Connect the equipment into an outlet on a circuit different from that to which the receiver is connected.
- Consult the dealer or an experienced radio/TV technician for help.

Before Assembly

Select the area where you are going to set up and operate your machine. For safe operation, the location must be on a hard, level surface. Allow a workout area of a minimum 92.7" X 67 .1" (2.4m X 1.7m).

Basic Assembly Tips

Follow these basic points when you assemble your machine:

1. Read and understand the "IMPORTANT SAFETY GUIDELINES" before assembly.
2. Collect all the pieces necessary for each assembly step.
3. Using the recommended wrenches, turn the bolts and nuts.
4. The assembly requires 2 people.

3 / SPECIFICATIONS

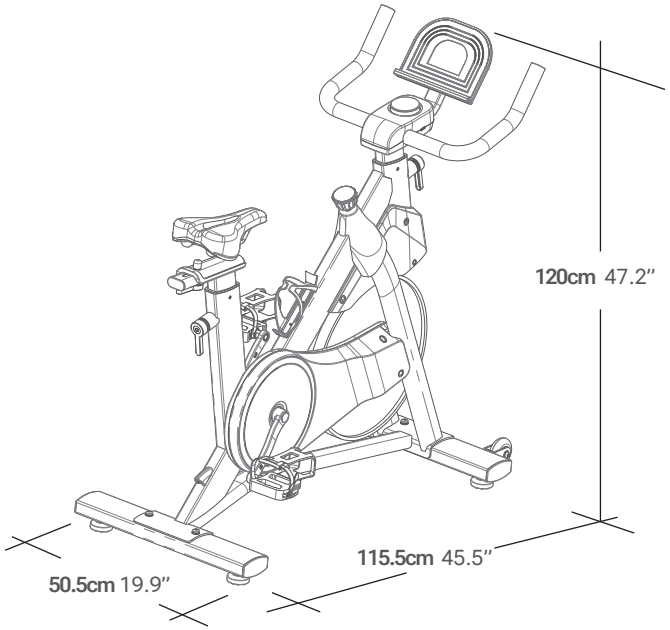

Maximum User Weight:
330 lbs. (150kg)

External power supply (AC Adaptor) : 9V DC, 1A

Product Specification

Product name	Kardio T2S spin bike
Model NO	URSB005
Resistance mechanism	Magnetic resistance
Connection field	Bluetooth® 5.0
Drive system	Belt
User Height range recommendation	4'11"- 6'5"
Maximum User weight	330lbs
Power supply unit (Adaptor)	
Input	100-240V AC,50/60Hz,0.6A
Output	9V DC 1A

4 / PARTS LIST

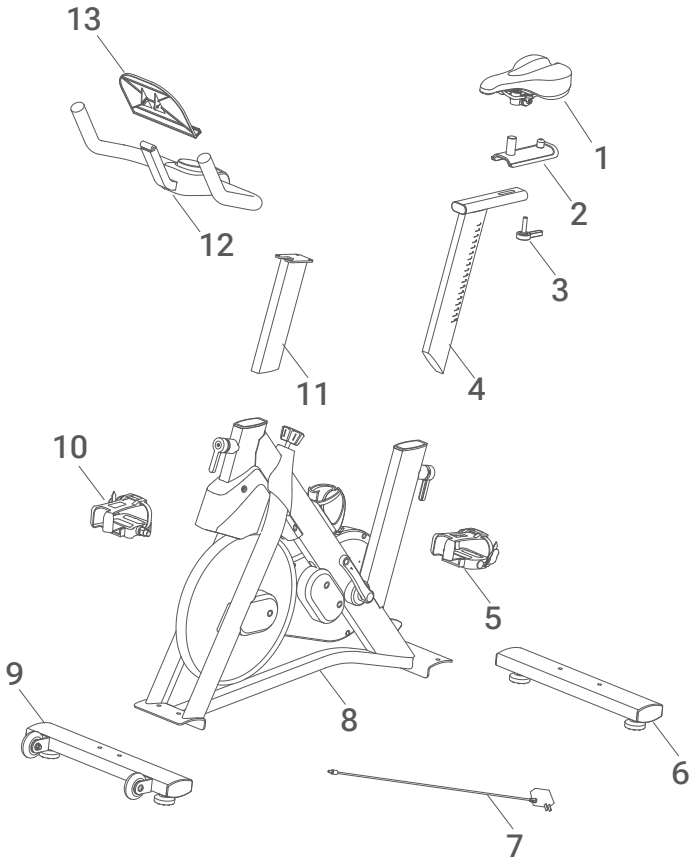

Item	Qty	Description	Item	Qty	Description
1	1	Seat	8	1	Frame
2	1	Seat slide lever	9	1	Stabilizer, Front
3	1	Seat Adjustment Lever	10	1	Petal, Right
4	1	Seat post	11	1	Handlebar Post
5	1	Petal, Left	12	1	Handlebar
6	1	Stabilizer, Rear	13	1	Tablet Holder
7	1	AC Adaptor			

5 / ACCESSORIES & TOOLS

Accessories

A

Screw M6*15 X 2
Washer Φ6 X 2
Standard Elastic Washer X 2

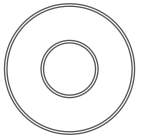

Big Washer Φ10 1pc

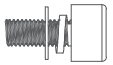

B

Bolt M6*15 X 4
Washer Φ6 X 4
Standard Elastic Washer X 4

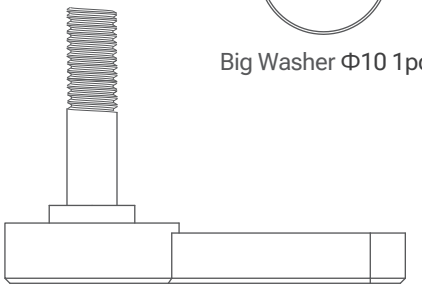

Seat Adjustment Lever

Tools

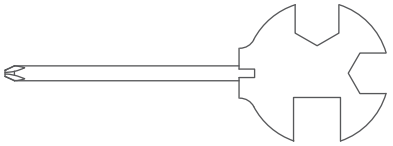

Allen Wrench x 1

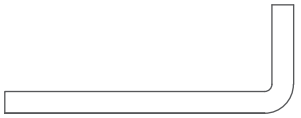

Hex Tool x 1

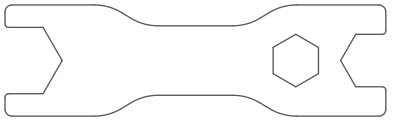

Flat Wrench x 1

6 / ASSEMBLY

Before Assembly

1. Dismantle screws in terms of spring and flat washers with hex tool.
2. Discard the removed stabilized tubes, keep rest of bolts in terms of spring and flat washers.

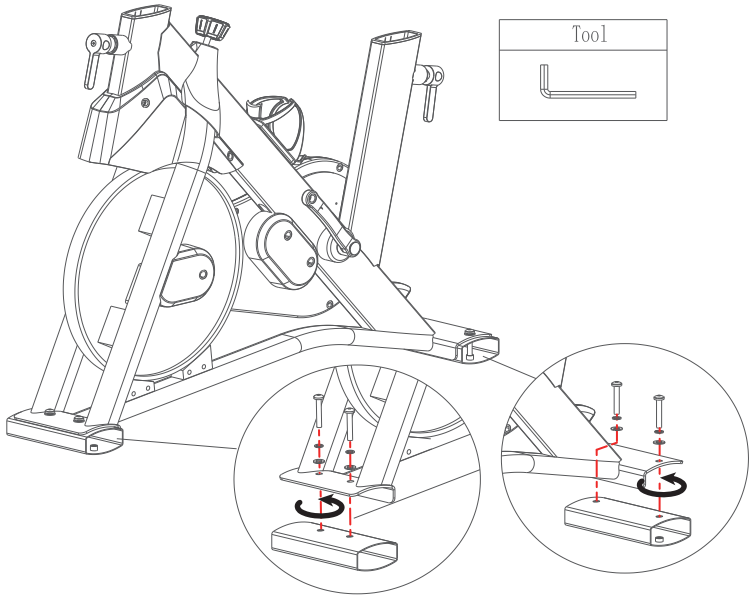

3. Snipped the nylon ties and wrapped wooden wedges(Refer to arrow G).
4. Take out 4pcs wooden blocks (Refer to arrow H), which used for relieve Fly wheel wobble during transportation.

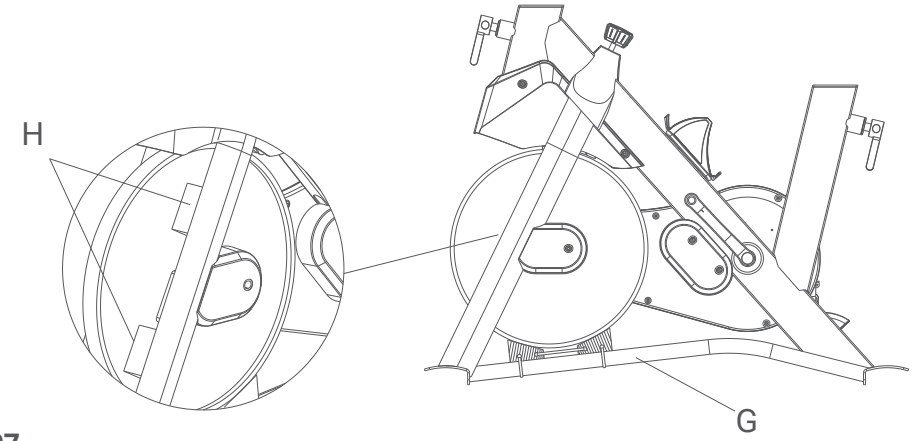

Step 1:

Attach stabilizers (Rear and Front) to Frame.

Tools : Hex tool **Hardware :** Dismantled bolts in terms of spring and flat washers

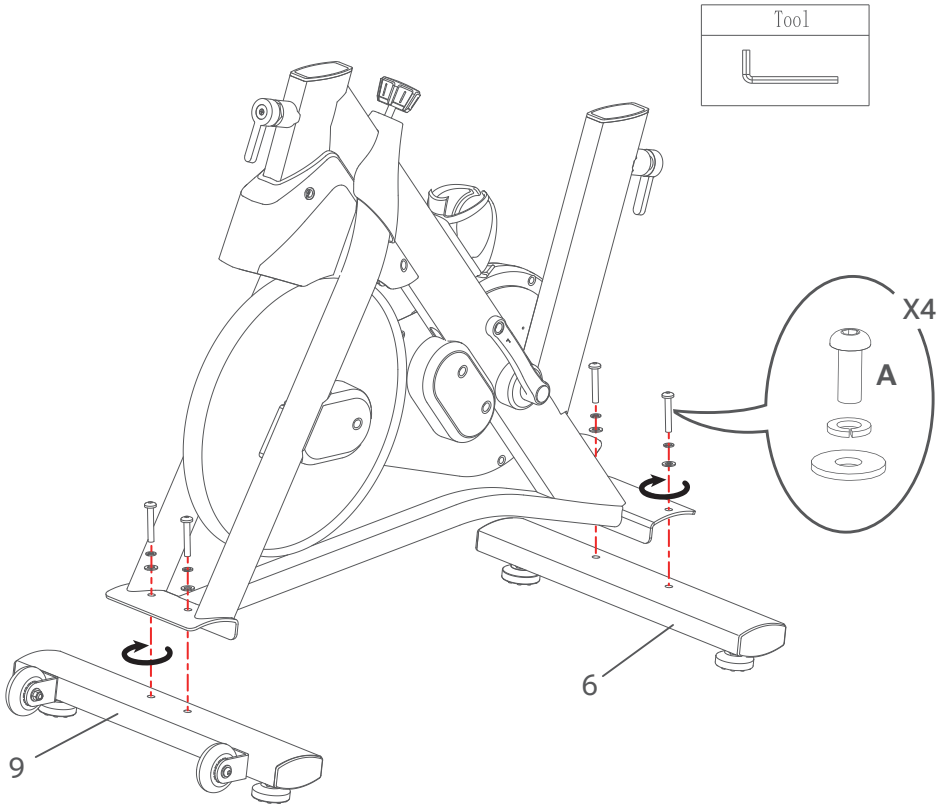

Step 2:

Attach Petals (Right and Left) to Frame Assembly.
Tools : Allen Wrench
Flat Wrench

If the threads strip due to improper installation or incoming Petals defective , the Petals can disengage from the bike and /or break while under usage , which can causes in serious injury to user.

NOTICE :
Left petal is reverse- threaded and the Petals have labeled " L " OR " R" for distinguish.
The petal MUST be manual installed straight into Crank arms and ensure threads are aligned correctly.

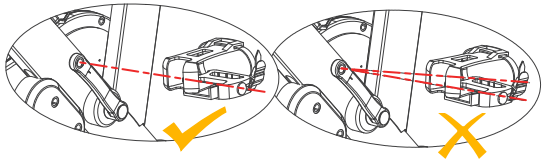

First remove the nuts from the petals with Allen wrench.
Insert petals to crank arm and confirm that the Pedal is fully tightened with assigned tools, please attention the screwing direction under figure.
Repeat with the other Pedal.

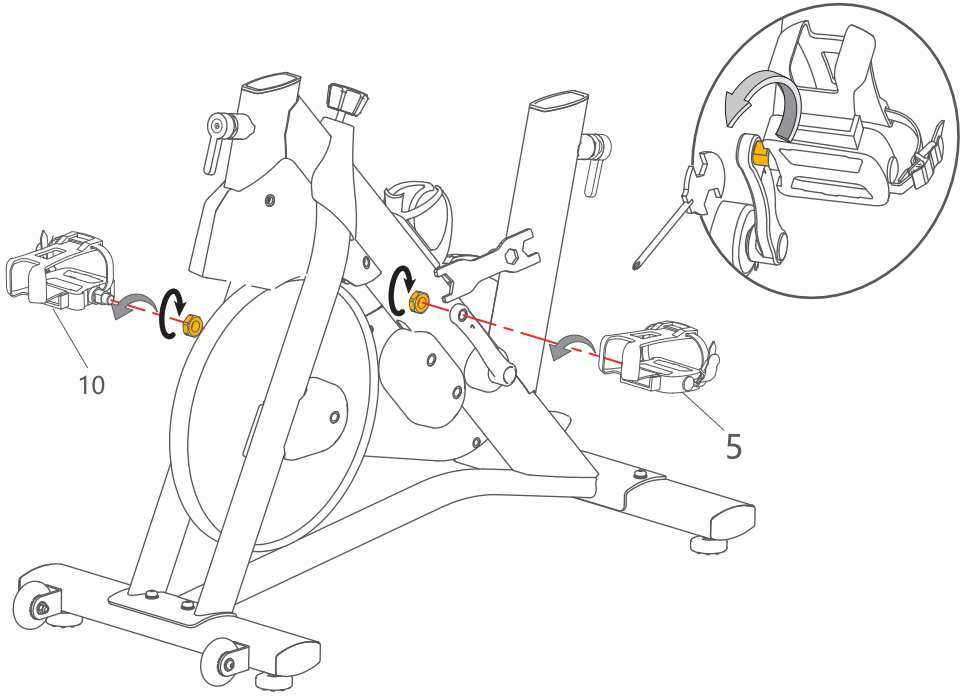

Step 3:

① Install Seat on Seat Slider.
Attach Seat Assembly to Seat Post.

Tools: Allen Wrench
Hardware: Seat; Seat Slide Lever; Seat Post; Seat Adjustment Lever;

NOTICE:
- Insert Seat on Seat Slider vertically, then Fix tightly with Allen wrench.
- Place Seat Assembly on Seat Post vertically, make sure Seat Slide Lever align with hole of Seat Slider before fix tightly.

If Nut loosen or slipped, the Seat can be vibrated or disengaged while under usage, which causes in serious injury or accident to user.

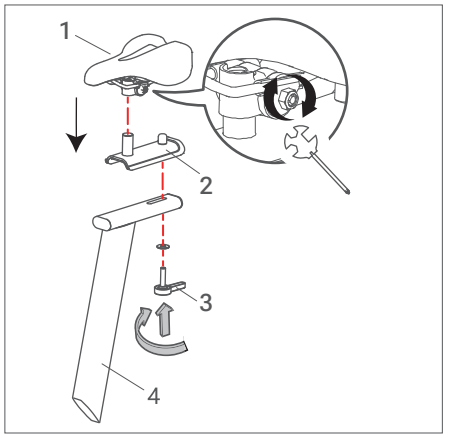

② Attach Seat Post to Frame Assembly.

NOTICE :
Insert Seat Post vertically, make sure Seat Post align with hole of Frame Assembly.

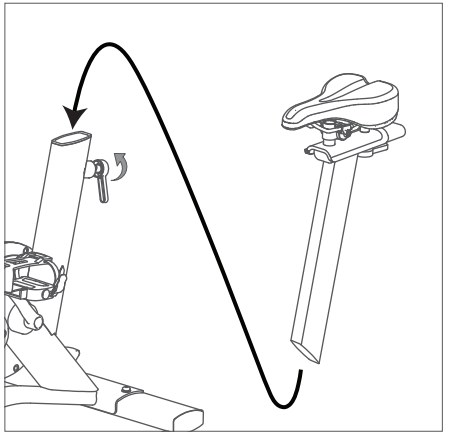

③ Attach Handlebar Post to Frame Assembly.

NOTICE :
Don't break or twist cable while Untie connector. Then pass data log-cable through Handlebar Post by hand and tighten Handlebar Adjust Lever.

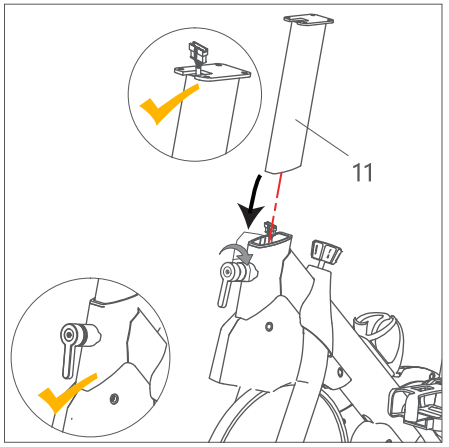

Step 4:

① Attach Handlebar to Handlebar Post.
Tools: Hex Tool
Hardware: Bolt 4pcs **(B)**; Spring Washer 4pcs; Washer 4pcs

NOTICE :
Data log connectors are engaged properly before insert Handlebar into Handlebar Post, then tight fix screws with Hex Tool.

⚠ ***If data log connector has not jointed correctly ,the embedded console can't be power on or data transmit interrupted while under usage .***

② Attach Tablet Holder to Handlebar.
Tools: Allen Wrench
Hardware: Screw 2pcs **(A)**; Spring Washer 2pcs; Washer 2pcs

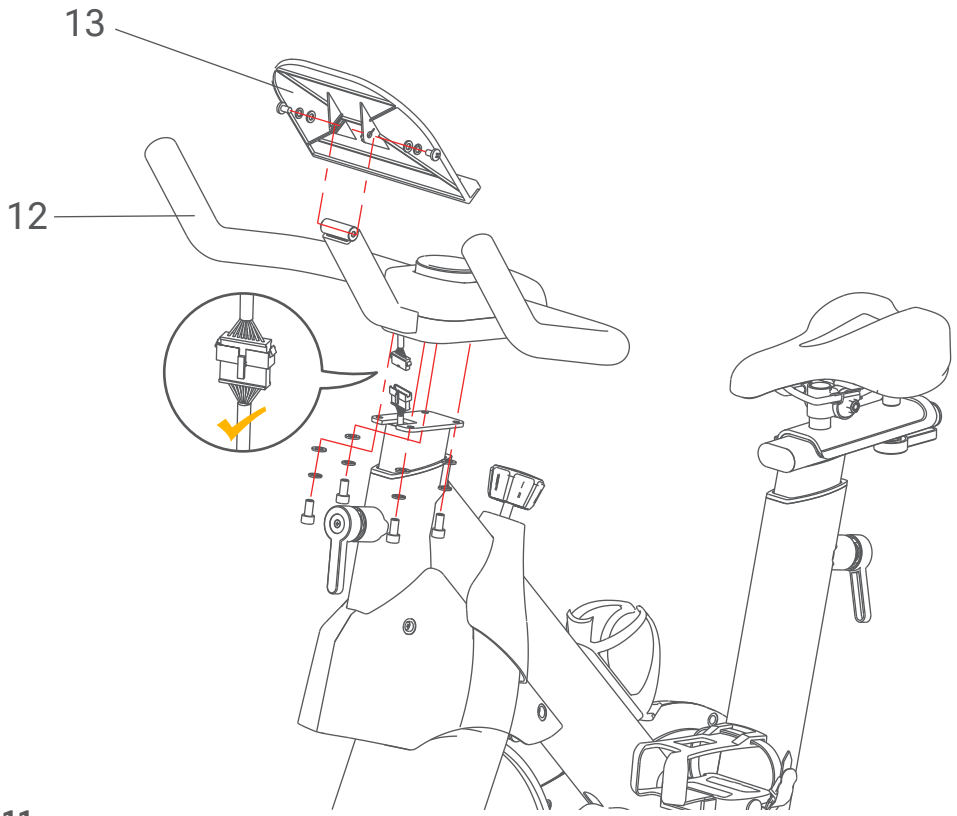

Step 5:

Attach AC Adaptor to Frame.

⚠ ***Before plug in AC adaptor to power outlet, exercise bike MUST switch to Work mode by a 1/4 rotate emergency brake turn anti-clockwise.***

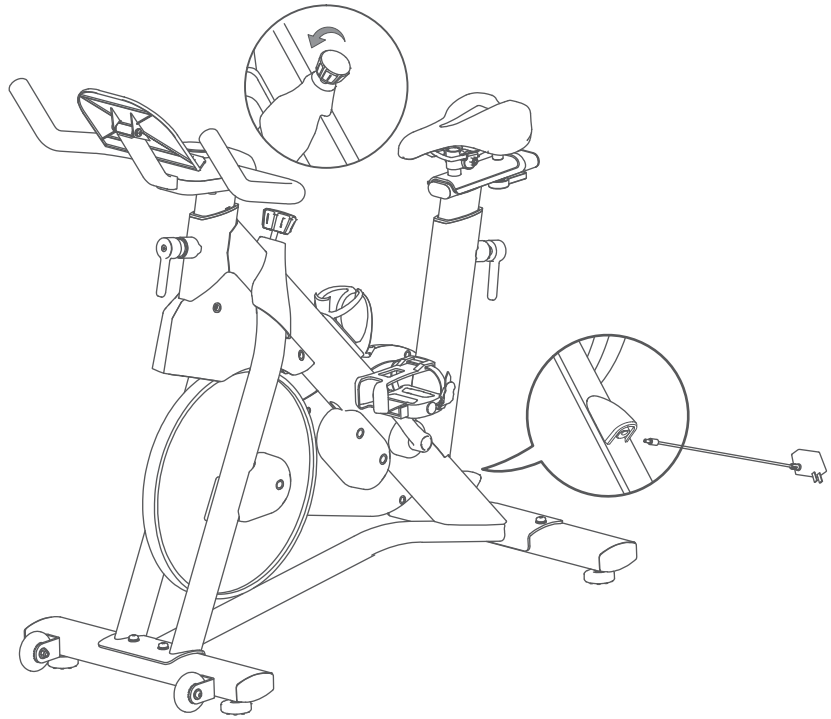

DC 5V-1A USB port for mobile phone or tablet charge while cycling .

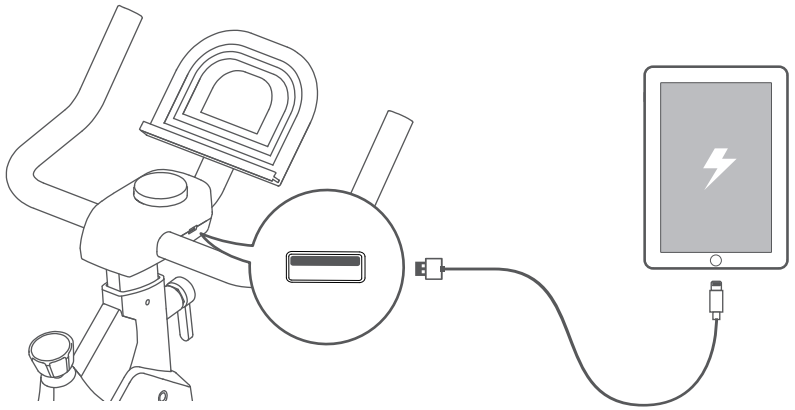

7 / BEFORE YOU START

Moving and Storing the Machine

- Remove water bottle from rack
- To lock flywheel by push and 1/4 rotate emergency brake turn clockwise
- Pull handlebar toward you and push exercise bike to your desired location,where far away from children and pets .

Be carefully when bike transportation ,for safe storage of bike, you MUST to remove AC adaptor and place in a secure location, Tighten emergency brake as described untill flywheel is locked.

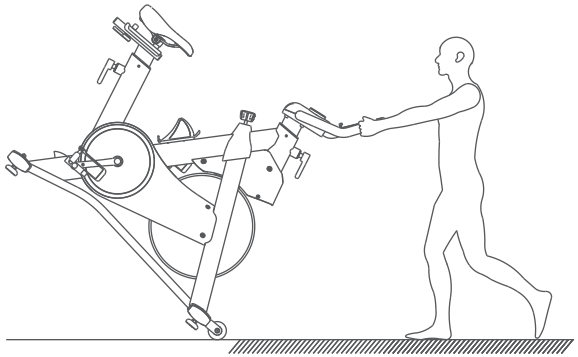

Leveling the Machine

The machine needs to be leveled if your workout area is uneven. Levelers are found on each side of the stabilizers. Lift the stabilizer slightly to take the weight off the adjuster, then turn the knob to adjust the stabilizer foot.

Do not adjust the levelers to such a height that they detach or unscrew from the machine. Injury to you or damage to the machine can occur.

Make sure the machine is level and stable before you exercise.

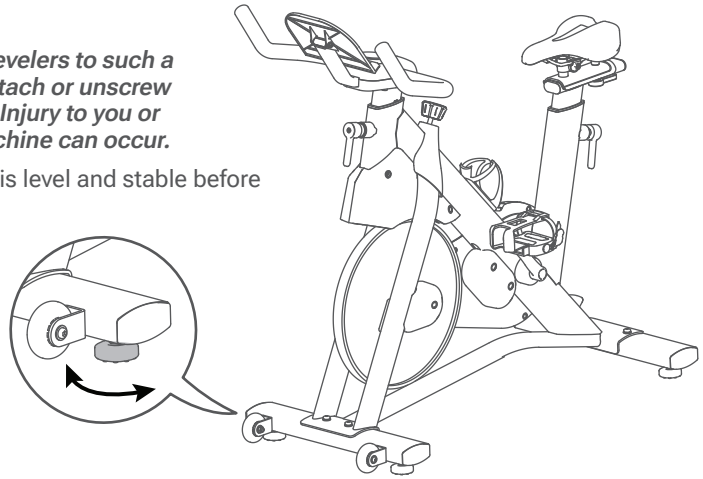

8 / OPERATION

Workout with Urevo Fitness App

This exercise bike has integrated Bluetooth® 5.0 connectivity which allows it to work with Urevo Fitness App or others Fitness App (Compatible with Zwift and Kinomap App).
With Urevo Fitness App, it can be accessed through your device when synced to the console of exercise bike, you receive workouts reports on your device for coaching your exercise planning, Urevo App also offers a variety of professional courses.

App Connection and Use Guides

1. Download Urevo Fitness App on your device, either App store or Google play by scanning QR code.

2. Free of charge to create membership and log in.

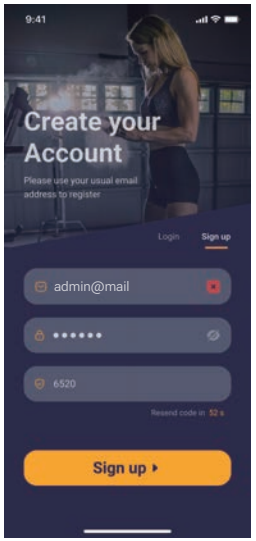

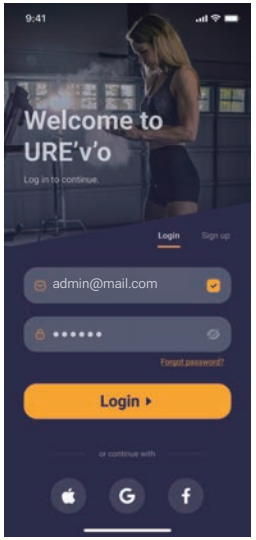

3. Connectivity exercise bike to your device.

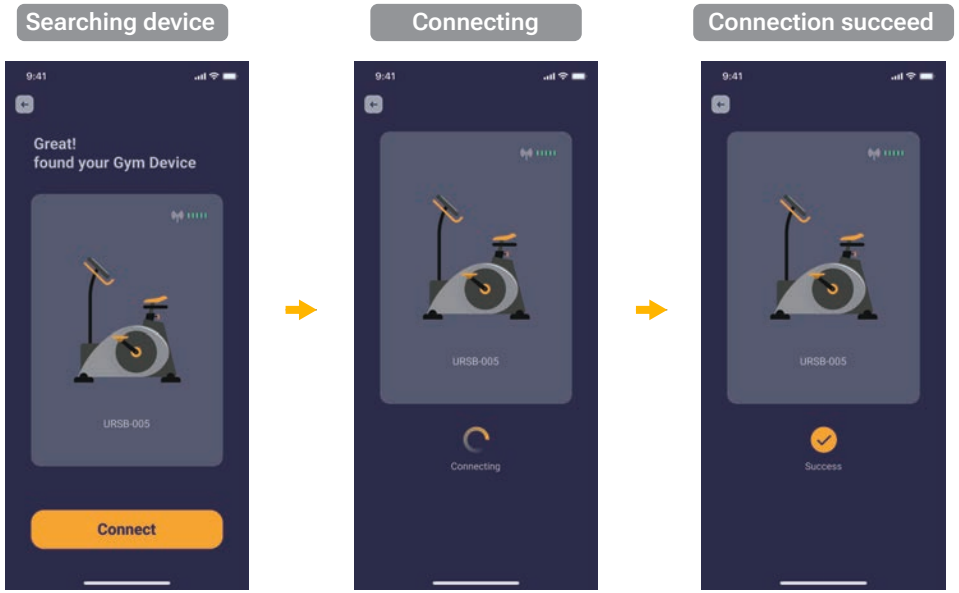

Console Feature and Control Instruction

Item	Description	Corresponding indicator
Rpm	The RPM display field shows the current average revolutions per minute (RPM).	/
Level	The LEVEL display field shows the current resistance level. The range of resistance is 1 - 16 which can be modified by 1 increments.	/
Time	The TIME display field shows the time from start to finish of workout.	
Mph	The Mph display field shows the currently calculated speed of the use (Mi Per hour).	
Mi	The Mi display field shows the distance from start to finish of workout.	
Kcal	The Kcal display field shows the estimated total calories from start to finish of workout.	
Scan	The Scan means scrolling display to shows the metrics of “Mph”; “Time”; “Mi” and “Kcal” Per 3seconds, please slight push console if you would like to permanently display one of metric.	SCAN
Bluetooth connection	While indicator flashing, the machine is seeking connec-tion device, once Bluetooth connected, indicator becomes solid light.	

Emergency stop

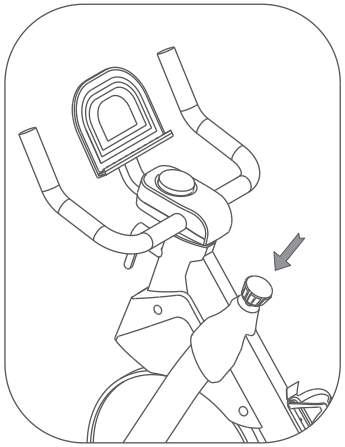

To stop the petals immediately ,push down hard on the emergency brake.

Do not get down from bike untill the petals have come to a complete stop. Be aware that the moving pedals can strike legs.

Seat Adjustment

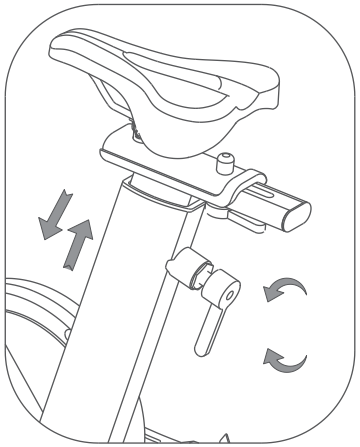

Up and down adjustment

Loosen (anti-clockwise) seat post adjustment lever, then firm grasp seat to Push / Pull seat post untill your desired height and tighten (clockwise).

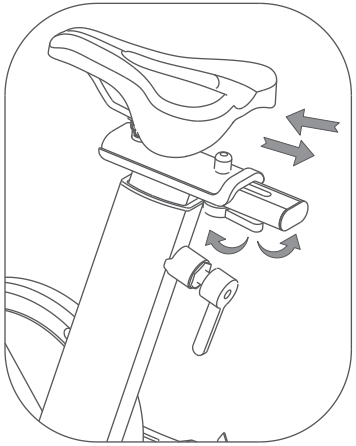

Back and forth adjustment

Loosen (anti-clockwise) seat slide adjustment lever, then firm grasp seat to forth / back untill your comfortable inseam and tighten (clockwise).

Handlebar Adjustment

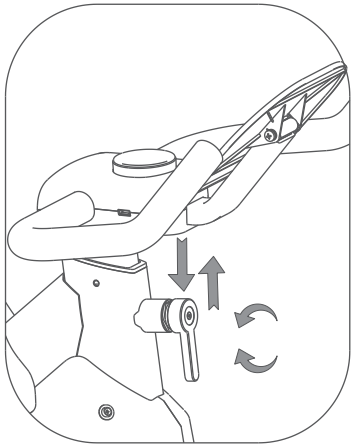

Up and down adjustment

Loosen (anti-clockwise) handlebar adjustment lever, then firm grasp handlebar to Push / Pull handlebar post untill your desired height and tighten (clockwise).

- ***Do not lift Seat Post/ Handlebar above " Max "scale.***
- ***Do not adjust Seat/Handlebar while cycling .***
- ***Stop cycling immediately when you felt Seat/Handlebar slip down or back slide.***

9 / TROUBLE SHOTING

Condition/Problem	Things to Check	Solution
No display/partial display/ unit will not turn on	Check adaptor connection with electrical (wall) outlet	Make sure adaptor is plugged into a functioning wall outlet.
	Check connection at front of unit	Connection should be secure and undamaged. Replace adapter or connection at unit if either are damaged.
	Check adaptor cable connections	Make sure adaptor cable does not disconnected or damaged, Replace adapter if confirmed.
	Check console display for damage	Visual check that console display is cracked or otherwise damaged. Replace Console if damaged.
Exercise bike wobble does not sit level	Check surface under bike	Change flat floor or adjust stabilizer feet.
Pedals loose/unit difficult to pedal/ Pedals seem to skip or slip	Check pedal to crank arm connection	Pedal should be tightened securely to crank arm. Be sure connection is not cross-threaded.
	Check crank arm to axle connection	Crank arm should be tightened securely to axle.
Clicking sound when pedaling	Check pedal to crank connection	Remove pedals. Make sure there is no debris on threads, and reinstall or replace the pedals.
Seat post movement	Check locking lever	Be sure adjustment lever is locked into one of the seat post adjustment holes and tighten it again.

10 / WARRANTY

MANUFACTURER'S LIMITED WARRANTY

UREVO warrants to the original purchaser that this product is free from defects in material and workmanship when used for the purpose intended, under the conditions that it has been installed and operated in accordance with UREVO Owner's Manual. UREVO 's obligation under this warranty applies to the following:

COMPONENT LENGTH OF WARRANTY

Structural Frame 1 year For Home Use Only;
All Other Components 90 days For Home Use Only.

Exclusions from Warranty Coverage:

UREVO does not warrant against and is not responsible for, and no implied warranty shall be deemed to cover, any product failure, product malfunction, or damages attributable to:
1. Improper installation and/or failure to abide by UREVO 's installation guidelines;
2. Use of this product beyond normal home use, or in an application for which it was not designed;
3. Cosmetic items such as scratches, dents or discolorations;
4. Damage caused by normal wear and tear, vandalism, accidental or by animals;
5. Any act of Nature (such as fire, flooding, snow, ice, hurricane, earthquake, lightning or other natural disaster), environmental condition (such as air pollution, mold, mildew, etc.), or staining from foreign substances (such as dirt, grease, oil, etc.);
6. Normal weathering due to exposure to sunlight, weather and atmosphere which can cause colored surfaces to among other things, flake, chalk, accumulate dirt or stains;
7. Improper operation, alteration, handling, storage, abuse or neglect of the products.

UREVO , using its sole discretion, will either repair or replace free of charge any part(s) proven to be defective under normal home use. Any repair or replacement shall provide no new warranty coverage, but shall retain only the remaining portion of the original product's warranty. This warranty is offered only to the original purchaser and is not transferable. Proof of original purchase is required.

Replacement parts can be ordered by emailing our customer service department:

US: Services@urevosports.com

EU: service_eu@urevosports.com

Open Monday thru Friday 8:00 AM - 5:00 PM (PST).
When ordering replacement parts please have the following information ready:

1. Order Number
2. Description of Parts(Add photos or videos would be helpful)
3. Part Number
4. Date of Purchase