ZUWO Secure Portable Safe (ZU2010E)
Instruction Manual

Always the safe choice.

zuwo

Content

Packing List ---------- 2
Description of Products ---------- 3
Technical Data ---------- 4
Disclaimers ---------- 5
Battery Installation ---------- 6
Master Code Programming ---------- 7
Key Fob/ Key Card Programming ---------- 8
Deleting Key Fobs and Key Cards ---------- 9
Silent Mode Setting ---------- 9
Low Battery Warning ---------- 10
Securing Your Safe ---------- 10
Using the Security Cable ---------- 11
Using the Mounting Screws ---------- 11
Customer Support/Warranty ---------- 12
Linked Warranty (Terms and Conditions) ---------- 12

1. Read this instruction manual carefully and completely before mounting and usage. Keep this manual for future reference.

2. The instructions for use shall be provided to the end user.

Packing List

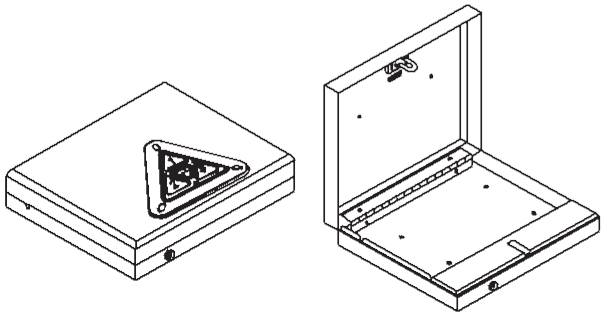

1. ZUWO ® Safe

2. RFID Key Fob(1)

3. RFID Key Card(1)

4. Owner' s Manual

5. Button Tool

6. High Strength Steel Security Cable

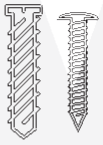

7. Backup Keys(2)

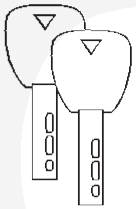

8. Mounting Screws

Description of Products

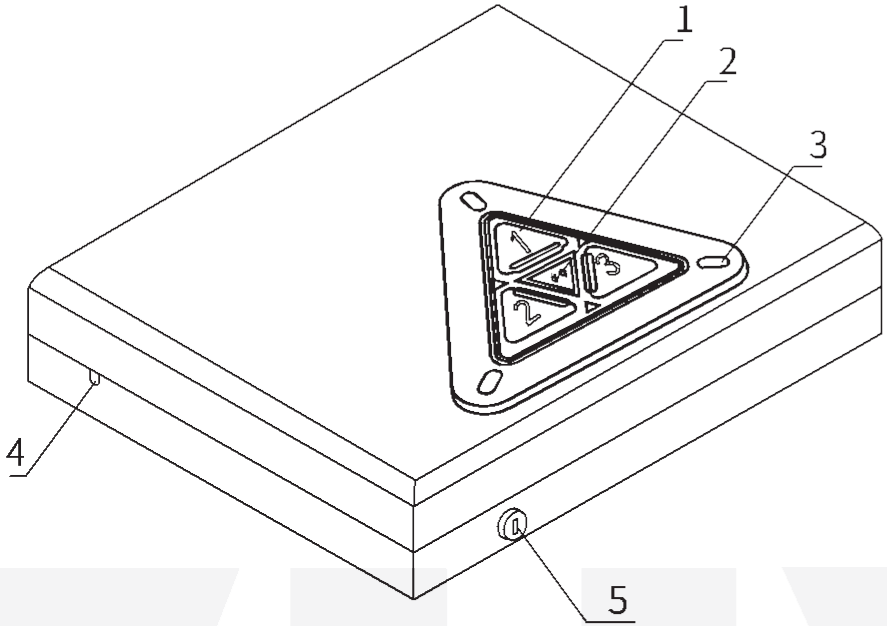

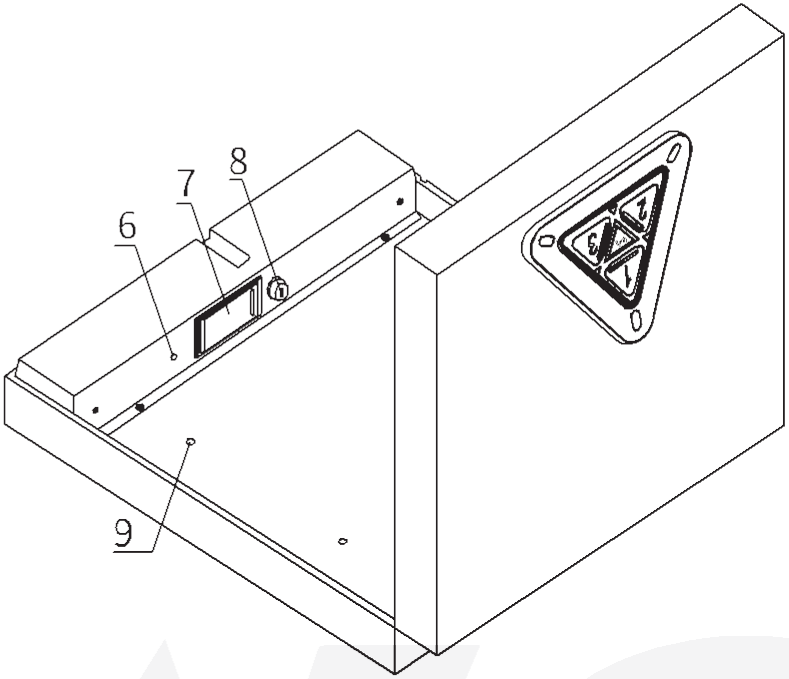

1: Button

2: Keypad

3: Indicator Light

4: Cable Hole

5: Key Hole

6: Reset Button

7: Battery Compartment

8: Light

9: Pre-Drilled Holes

Technical Data

Model	ZU2010E
Battery	4xAAA(LR03)
temperature	0/32~50/122(°C/°F)
Key card & Key fob	10 max.
Pass code	1 max.
warranty	1 year

⚠ ATTENTION ⚠

In order to ensure the security of you and others, please be sure to comply with the warnings below.

- **Do not place or store the backup keys inside the safe at any time. If the battery fails, you will be unable to open the safe.**
- **Do not expose to extreme heat or cold. Battery power may be affected.**
- **Do not store loaded guns in this unit. Firearms are serious in nature and must be handled with respect. Store responsibly.**
- **Always check to make sure door has latched when closing; lid requires a firm press and locks automatically.**

Disclaimers

Neither seller nor manufacturer shall be liable for unauthorized access, any injury, loss or damage to personal property direct or consequential, arising out of the use of, or the inability to use the ZUWO®Safe.

The user shall determine the suitability of the ZUWO®Safe before the intended use and user assumes all risk and liability whatsoever in connection therewith, ZUWO®Safe are not intended to protect against environmental hazards including fire and water.

Be sure and follow all local and state firearm laws.

⚠ **Attention: Do not operate a firearm without proper training and experience.**

Battery Installation

1. To get started, insert one of your back up keys into the key hole at the front of the safe (Figure A). Push key in and rotate the key 90 degrees counter clockwise direction to open the safe.

2. Locate the battery compartment door on the inside of the safe. Open the battery compartment door.

3. Open the battery cover and insert the 4xAAA alkaline batteries (not included) into the battery compartment. Note that pay attention to the "+" and "-" signs. The "-" end of the batteries go against the spring inside of the compartment.

4. When the batteries are inserted correctly you will hear a short beep once and the keypad will light up.

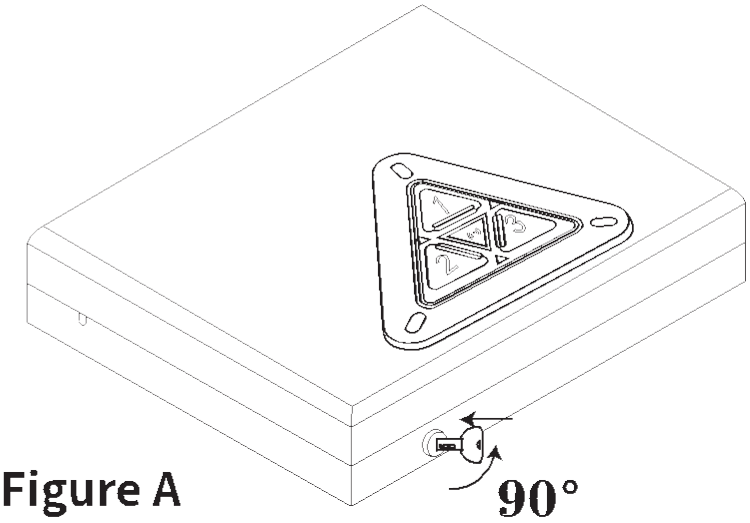

Figure A

5. Once you hear the beep and see the keypad light up, place the battery cover. You are now ready to program your safe.

⚠ **Important: Your ZUWO® safe will automatically lock when you fully close the lid.**

Master Code Programming

First time users should change the default code as soon as possible to prevent unauthorized access to your safe, so it should be kept confidential.

TIP: Code Requirements
• Your code can be a minimum of 3 and a maximum of 8 digits. For your security, the safe will time out and sleep for 5 minutes if 5 incorrect entries are made. The alarm will last for 5 minutes (the password and card are invalid during the alarm), and then it will be released.
• Two keys can not be pressed simultaneously.
• Programming a new code will overwrite your previous code.

1. Enter default code 1-2-3 on the keypad to open your safe.

2. With the safe open, press and hold the "RESET" button by using button tool (3 seconds) and let go (Figure B), all Indicator lights will light up once with the one beep.

TIP: If you make a mistake, all keys will light up red 5 times with 5 beeps.

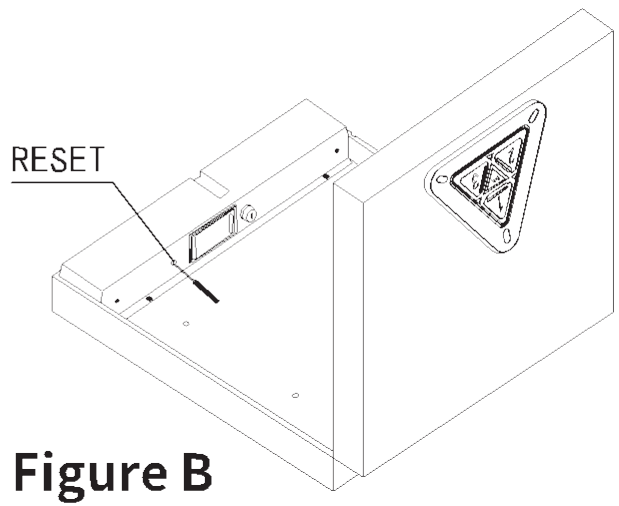

Figure B

3. Enter your NEW master code.

4. Press the "RESET" button once (1 second) and let go(within **4 seconds** after you enter NEW master code), all indicator lights will light up blue twice with beeps. This tone confirms that the pass word has been reset.

TIP: If you have not press the "RESET" button within **4 seconds** after you enter NEW code, the new code will not work and the indicator lights will light up red 5 times with beeps

5. Now test the code. If you make a mistake and the new code will not work, simply start over with step2.

Key Fob/ Key Card Programming

TIP: Press any button before you open the safe by key fob or key card.

1. Open your safe.

2. Press and hold the "RESET" button by using button tool (3 seconds) and let go (Figure C), all Indicator lights will light up once with the beep.

3. Place the key fob over the keypad approximately 1/4 inch from the surface for the scan (Figure D). The indicator lights will light up blue twice with beeps. This tone confirms that the key fob has been reset successfully.

TIP: If you have not place the key fob within **4 seconds** after you press "RESET" button, the new key fob will not work and the indicator lights will light up red 5 times with beeps

4. Now test the key fob (Press any button before place the key fob). If you make a mistake and the new key fob will not work, simply start over with step 2.

TIP: For key card programming follow up the key fob steps.

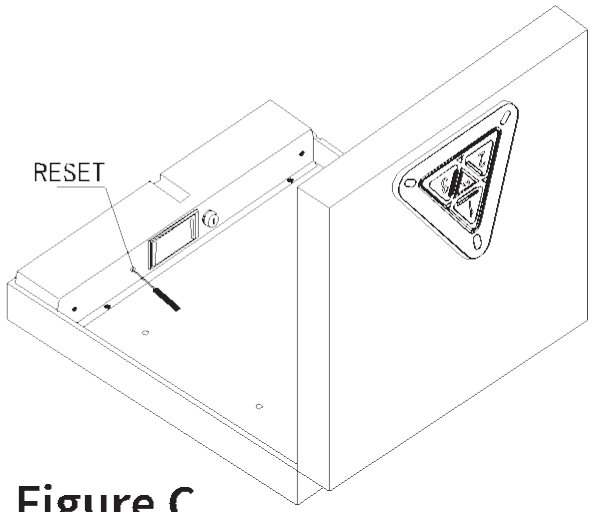

Figure C

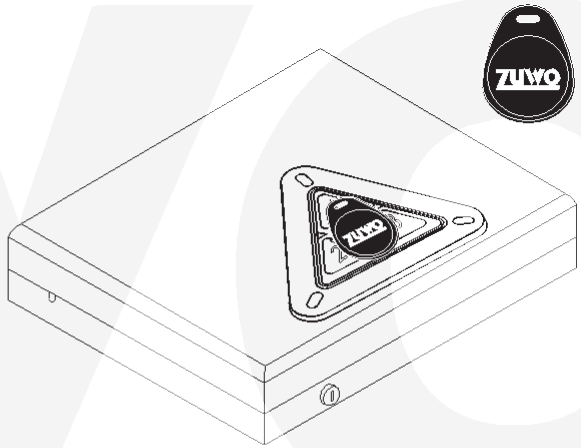

Figure D

Deleting Key Fobs and Key Cards

1. Open your safe.

2. Press and hold the "RESET" button by using button tool (5 seconds) and let go (Figure E), all Indicator lights will light up twice with the beeps.

3. Now test the key fob or key card. If you make a mistake and the key fob or key card will work, simply start over with step 2.

TIP: This procedure will not affect the keypad master code. Keypad master code can not be deleted on the safe.

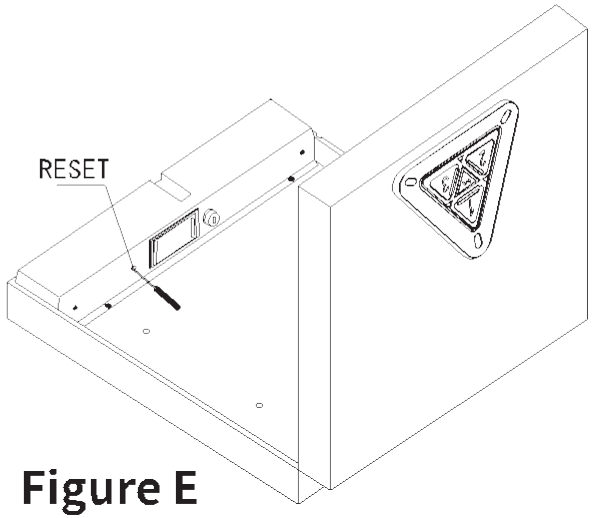

Figure E

Silent Mode Setting

To silence the audible sound of the electronics, press the "1" button for 3 seconds, all indicator lights (1-3) will light up twice and let go. To turn the sound back on repeat the above steps.

Low Battery Warning

If the indicator light will light up red 10 times with beeps during opening the safe. Your battery level is critically low and your safe needs to be replaced the 4 new batteries.

⚠ **Attention:**

- Use the NEW AAA alkaline battery. Using other batteries may cause unusable conditions.
- When the battery level is low, there will be a problem that the safe cannot be locked. In this situation, simply replace the 4 NEW AAA alkaline batteries and re-enter the password.

Securing Your Safe

Your ZUWO®safe can be secured a few different ways. Included is a security cable to attach your safe to larger stationary objects. There are also mounting screws included to mount the safe to a flat surface using the pre-drilled holes on the bottom.

Using the Security Cable

1. Loop the security cable around a secured object.

2. Run the end of the cable through the eye of the other end and pull tight around the object.

3. Place the end of the security cable inside the fully enclosed cable mount inside your ZUWO safe as shown in (Figure F).

4. Make sure the safe closes with the cable secured inside the cable mount.

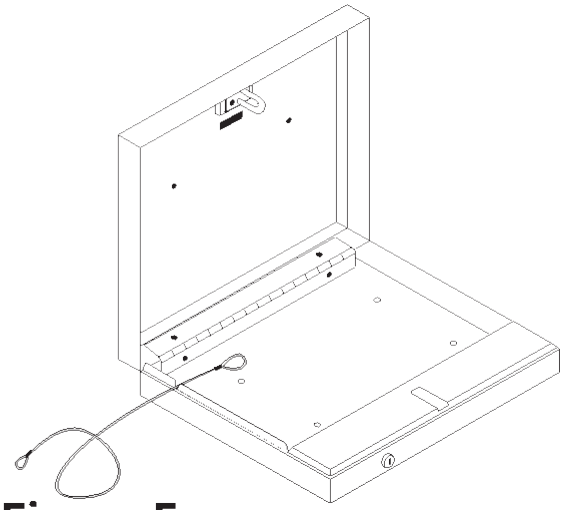

Figure F

Using the Mounting Screws

TIP: Make sure you have enough clearance for the lid to open properly before mounting the safe.

1. Position the safe on a flat surface where you want to mount it.

2. Use a pencil to mark the holes for drilling.

3. Drill pilot holes.

4. Position safe in place and install screws through safe into pilot holes. Tighten screws.

⚠ **Important: Mounting the safe vertically so that the door flips upward will result in incomplete opening of the safe due to weight. The door will open if the safe is mounted vertically so that door opens down or to side.**

Customer Support/Warranty

If you have a problem with your ZUWO®safe that is not answered in the this manual, we encourage you to email us: **support@zuwosafe.com**

Linked Warranty (Terms and Conditions)

ZUWO® is committed to building high quality products and will make every effort to ensure our products are free from any defects. We guarantee your safe will be free of defects in materials or workmanship for a period of one year from the date of original. This warranty does not cover abuse, misuse, use in any manner for which is not designed, neglect, modification, damage in advertently caused by the owner; accidents, and/or tampering.

If you safe is determined to be defective and we are responsible for the cause we will have it repaired at our expense, or we will send a new replacement at no cost to you. You will be required to return your existing unit as well as all included accessories to ZUWO® prior to replacement of the defective unit along with your order of purchase.

If it is determined your safe needs to be returned our customer support team will provide you with a return detail.

Please have the following information available when contacting us:

- Purchaser's name and mailing address, email address and phone number
- Online order number
- Detailed description of problem

NEITHER SELLER NOR MANUFACTURER SHALL BE LIABLE FOR ANY INJURY, LOSS OR DAMAGE, DIRECT OR CONSEQUENTIAL, ARISING OUT OF THE USE OF, OR THE INABILITY TO USE THE ZUWO®SAFE.

FCC Warning Statement

Product Name: ZU2010E

Product Brand: ZUWO

This device complies with part 15 of the FCC Rules. Operation is subject to the following two conditions: (1) this device may not cause harmful interference, and (2) this device must accept any interference received, including interference that may cause undesired operation.

Any changes or modifications not expressly approved by the party responsible for compliance could void the user's authority to operate the equipment.

NOTE: This equipment has been tested and found to comply with the limits for a Class B digital device, pursuant to Part 15 of the FCC Rules. These limits are designed to provide reasonable protection against harmful interference in a residential installation. This equipment generates, uses and can radiate radio frequency energy and, if not installed and used in accordance with the instructions, may cause harmful interference to radio communications. However, there is no guarantee that interference will not occur in a particular installation.

If this equipment does cause harmful interference to radio or television reception,

which can be determined by turning the equipment off and on, the user is encouraged to try to correct the interference by one or more of the following measures:

-- Reorient or relocate the receiving antenna.

-- Increase the separation between the equipment and receiver.

-- Connect the equipment into an outlet on a circuit different

from that to which the receiver is connected.

-- Consult the dealer or an experienced radio/TV technician for help.

The device has been evaluated to meet general RF exposure requirement. The device can be u sed in portable exposure condition without restriction

ZUVO

ZUK