BC-60R Vet

Auto Hematology Analyzer

Operator's Manual

CE

© 2022 Shenzhen Mindray Animal Medical Technology Co., Ltd. All rights reserved.

For this Operator's Manual, the issued date is 2022-10.

IMPORTANT!

The product is veterinary use only.

Intellectual Property Statement

Shenzhen Mindray Animal Medical Technology Co., Ltd. (hereinafter called Mindray Animal Medical) owns the intellectual property rights to this product and this manual. This manual may refer to information protected by copyright or patents and does not convey any license under the patent rights or copyright of Mindray Animal Medical, or of others.

Mindray Animal Medical intends to maintain the contents of this manual as confidential information. Disclosure of the information in this manual in any manner whatsoever without the written permission of Mindray Animal Medical is strictly forbidden.

Release, amendment, reproduction, distribution, rental, adaptation, translation or any other derivative work of this manual in any manner whatsoever without the written permission of Mindray Animal Medical is strictly forbidden.

mindray is the trademark of SHENZHEN MINDRAY BIO-MEDICAL ELECTRONICS CO., LTD. in China and other countries. All other trademarks that appear in this manual are used only for informational or editorial purposes. They are the property of their respective owners.

Responsibility on the Manufacturer Party

Contents of this manual are subject to changes without prior notice.

All information contained in this manual is believed to be correct. Mindray Animal Medical shall not be liable for errors contained herein nor for incidental or consequential damages in connection with the furnishing, performance, or use of this manual.

Mindray Animal Medical is responsible for the effects on safety, reliability and performance of this product, only if:

- all installation operations, expansions, changes, modifications and repairs of this product are conducted by Mindray Animal Medical authorized personnel.
- the electrical installation of the relevant room complies with the applicable national and local requirements.
- the product is used in accordance with the instructions for use.

⚠ WARNING

- It is important for the hospital or organization that employs this equipment to carry out a reasonable service/maintenance plan. Neglect of this may result in machine breakdown or injury of human health.

- Be sure to operate the analyzer under the situation specified in this manual; otherwise, the analyzer will not work normally and the analysis results will be unreliable, which would damage the analyzer components and cause personal injury.

NOTE:

This equipment must be operated by skilled/trained clinical professionals.

Warranty

THIS WARRANTY IS EXCLUSIVE AND IS IN LIEU OF ALL OTHER WARRANTIES, EXPRESSED OR IMPLIED, INCLUDING WARRANTIES OF MERCHANTABILITY OR FITNESS FOR ANY PARTICULAR PURPOSE.

Exemptions

Mindray Animal Medical's obligation or liability under this warranty does not include any transportation or other charges or liability for direct, indirect or consequential damages or delay resulting from the improper use or application of the product or the use of parts or accessories not approved by Mindray Animal Medical or repairs by people other than Mindray Animal Medical authorized personnel.

This warranty shall not extend to:

- Malfunction or damage caused by improper use or man-made failure.
- Malfunction or damage caused by unstable or out-of-range power input.
- Malfunction or damage caused by force majeure such as fire and earthquake.
- Malfunction or damage caused by improper operation or repair by unqualified or unauthorized service people.
- Malfunction of the instrument or part whose serial number is not legible enough.
- Others not caused by instrument or part itself.

Customer Service Department

Manufacturer:	Shenzhen Mindray Animal Medical Technology Co., Ltd.
Address:	Room 702, Tower 4, YESUN Intelligent Community III, No.1301-88 Guanguang Road, Xinlan Community, Guanlan Street, Longhua District, Shenzhen 518110, P. R. China
Website:	www.mindrayanimal.com
E-mail Address:	service@mindrayanimal.com
Tel:	+86 755-33997000

Contents

1 Safety Information ..... 1 - 1
1.1 Labels and Symbols on the System ..... 1 - 1
1.2 Safety-related Symbols and Messages ..... 1 - 8
1.2.1 General Safety Messages ..... 1 - 8
1.2.2 Analyzer Transportation and Installation-related Safety Messages ..... 1 - 9
1.2.3 Safety Messages Related to Reagents, Controls, and Calibrators ..... 1 - 10
1.2.4 Maintenance-related Safety Messages ..... 1 - 10
1.2.5 Laser Warning ..... 1 - 11
1.2.6 Network Security ..... 1 - 12
2 Using This Manual ..... 2 - 1
2.1 Overview ..... 2 - 1
2.2 Who Should Read This Manual ..... 2 - 1
2.3 How to Find Information ..... 2 - 1
2.4 Conventions Used in This Manual ..... 2 - 2
3 Understanding Your System ..... 3 - 1
3.1 Intended Use ..... 3 - 1
3.2 Test Parameters ..... 3 - 1
3.2.1 Blood Sample Test Parameters, Histograms, and Scattergrams ..... 3 - 2
3.3 Description ..... 3 - 4
3.3.1 Structure and Components ..... 3 - 4
3.3.2 Modules and Components ..... 3 - 5
3.3.3 Accessories ..... 3 - 8
3.4 Overview of Software Interfaces ..... 3 - 9
3.5 Reagents, Controls and Calibrators ..... 3 - 12
3.5.1 Reagents ..... 3 - 12
3.5.2 Controls and Calibrators ..... 3 - 13
4 Understanding the System Principles ..... 4 - 1
4.1 Overview ..... 4 - 1
4.2 WBC Measurement ..... 4 - 1
4.2.1 SF CUBE Cell Analysis Technology ..... 4 - 1
4.2.2 Derivation of WBC-Related Parameters ..... 4 - 3
4.3 Hemoglobin Concentration Measurement ..... 4 - 4
4.3.1 A Test Model Using the Colorimetric Method ..... 4 - 4
4.3.2 Derivation of HGB ..... 4 - 5
4.4 RBC/PLT Measurement ..... 4 - 5
4.4.1 Sheath Flow Impedance Method ..... 4 - 5
4.4.2 SF CUBE Cell Analysis Technology ..... 4 - 5
4.4.3 RBC-Related Parameters ..... 4 - 6
4.4.4 PLT-Related Parameters ..... 4 - 6
4.4.5 Reticulocyte Parameters ..... 4 - 7
4.5 Wash ..... 4 - 7

5 Installing and Connecting the System ..... 5 - 1
5.1 Notes for Analyzer Installation ..... 5 - 1
5.1.1 Space Requirements ..... 5 - 1
5.1.2 Power Requirements ..... 5 - 2
5.1.3 Environment Requirements ..... 5 - 2
5.1.4 Fuse Requirement ..... 5 - 3
5.1.5 Moving and Installing the Analyzer ..... 5 - 3
5.2 Connecting the Analyzer System ..... 5 - 3
5.2.1 Connecting the Reagents ..... 5 - 3
5.2.2 Connecting to the Peripherals ..... 5 - 5
6 Customizing the Analyzer Software ..... 6 - 1
6.1 Introduction ..... 6 - 1
6.2 Saving Settings after Changes ..... 6 - 2
6.3 Analyzer Settings ..... 6 - 2
6.3.1 System Setup ..... 6 - 2
6.3.2 User Management ..... 6 - 6
6.3.3 Auxiliary Setup ..... 6 - 7
6.3.4 Para. Setup (Administrators) ..... 6 - 9
6.3.5 Maintenance (Administrators) ..... 6 - 11
6.3.6 Reagent Setup ..... 6 - 11
6.3.7 Gain Setup (Administrators) ..... 6 - 11
6.3.8 Setting Auto Startup/Shutdown Time (Administrators) ..... 6 - 12
7 Operating Your Analyzer ..... 7 - 1
7.1 Overview ..... 7 - 1
7.1.1 Operating Your Analyzer ..... 7 - 1
7.1.2 Introduction to the Software Screen ..... 7 - 2
7.2 Preparations before Operation ..... 7 - 3
7.3 Startup and Login ..... 7 - 4
7.3.1 Starting up the Analyzer ..... 7 - 4
7.3.2 Login ..... 7 - 5
7.3.3 Switching Login Account ..... 7 - 6
7.4 Daily QC ..... 7 - 6
7.5 Preparing Whole Blood Samples ..... 7 - 6
7.6 Sample Analysis ..... 7 - 7
7.6.1 Setting up Sample Information ..... 7 - 7
7.6.2 Performing Sample Analysis ..... 7 - 7
7.7 Entering/Exiting Standby Status ..... 7 - 8
7.8 Shutting down the Analyzer ..... 7 - 9
8 Reviewing Sample Results ..... 8 - 1
8.1 Introduction ..... 8 - 1
8.2 Reviewing Sample Results ..... 8 - 1
8.2.1 Entering the “Table Review” Screen ..... 8 - 1
8.2.2 Operations on the “Table Review” Screen ..... 8 - 1
8.2.3 Searching for Sample Records ..... 8 - 3
8.2.4 Graph Review ..... 8 - 4
8.2.5 Communication ..... 8 - 6
8.2.6 Exporting Sample Results ..... 8 - 7

8.2.7 Calculating CV Values ..... 8 - 7
8.2.8 Editing Information ..... 8 - 7
8.2.9 Validating/Canceling Validation (Administrators) ..... 8 - 8
8.2.10 Deleting Sample Records ..... 8 - 9
8.3 Flags of Analysis Results ..... 8 - 9
8.3.1 Parameter Flags ..... 8 - 9
8.3.2 Flags of Abnormal Blood Cell Differential or Morphology Results ..... 8 - 10
9 Using the QC Program ..... 9 - 1
9.1 Overview ..... 9 - 1
9.2 QC ..... 9 - 1
9.2.1 Setting up QC Files (Administrators) ..... 9 - 1
9.2.2 Running QC Tests ..... 9 - 5
9.2.3 Reviewing QC Results ..... 9 - 7
9.3 When QC Results are Out of Range ..... 9 - 11
9.3.1 Troubleshooting ..... 9 - 11
9.3.2 Analyzing the Causes ..... 9 - 12
9.3.3 Taking Corrective Measures ..... 9 - 12
9.3.4 Verifying Effectiveness of Corrective Measures ..... 9 - 12
10 Calibrating Your Analyzer ..... 10 - 1
10.1 Overview ..... 10 - 1
10.2 When to Calibrate ..... 10 - 1
10.3 Checking before Calibration ..... 10 - 1
10.4 Running the Calibration Programs ..... 10 - 2
10.4.1 Notes before Calibration ..... 10 - 2
10.4.2 Manual Calibration ..... 10 - 2
10.4.3 Calibrating with Calibrators (administrators) ..... 10 - 4
10.4.4 Verifying Calibration Factors ..... 10 - 5
10.5 Calibration History ..... 10 - 5
11 Printing ..... 11 - 1
11.1 Setting up Print Template ..... 11 - 1
11.2 Printing Sample Result Report ..... 11 - 1
11.2.1 Printing Current Sample Result Report ..... 11 - 1
11.2.2 Printing from the Table Review Screen ..... 11 - 1
11.2.3 Printing from the Graph Review Screen ..... 11 - 2
11.2.4 Printing Microscopic Parameter Results ..... 11 - 2
11.3 Printing QC Result Report ..... 11 - 3
11.3.1 Printing QC Results in Specified QC Files ..... 11 - 3
11.3.2 Printing QC Graphs in Specified QC Graph ..... 11 - 3
11.4 Printing Manual Calibration Factors ..... 11 - 3
12 Service ..... 12 - 1
12.1 Overview ..... 12 - 1
12.2 When and Why to Perform the Maintenance ..... 12 - 1
12.2.1 Maintenance of Parts and Components ..... 12 - 1
12.2.2 ..... 12 - 2
12.2.3 Replacing the Parts and Components ..... 12 - 2
12.3 Reagent Management ..... 12 - 2
12.3.1 Viewing Reagent Information ..... 12 - 2

12.3.2 Replacing the Reagents ..... 12 - 2
12.3.3 Replacing the Waste Container ..... 12 - 5
12.4 Probe Cleanser Maintenance ..... 12 - 6
12.4.1 Daily Probe Cleanser Maintenance ..... 12 - 6
12.4.2 Probe Cleanser Maintenance to Parts and Components ..... 12 - 6
12.5 Auto-cleaning of the Parts and Components ..... 12 - 7
12.5.1 Cleaning the Probe Wipe and Blood Barrier Bracket ..... 12 - 7
12.5.2 Cleaning the Analyzer Front Cover ..... 12 - 9
12.6 Preparing to Pack-up ..... 12 - 10
12.7 Screen Calibration ..... 12 - 10
12.8 Viewing and Exporting Logs ..... 12 - 10
12.8.1 Viewing Logs ..... 12 - 11
12.8.2 Exporting Logs ..... 12 - 11

13 Troubleshooting ..... 13 - 1
13.1 Overview ..... 13 - 1
13.2 Checking Analyzer Status ..... 13 - 1
13.3 Error Messages and Solutions ..... 13 - 2

A Index ..... A - 1

B Specification ..... B - 1
B.1 Reagent ..... B - 1
B.2 Parameter Description ..... B - 2
B.3 Sampling Features ..... B - 3
B.3.1 Sample Mode and Test Panel ..... B - 3
B.3.2 Sample Volumes Required for Each Analysis ..... B - 3
B.3.3 Throughput ..... B - 3
B.4 Performance Specifications ..... B - 3
B.4.1 Background/Blank Count Requirements ..... B - 3
B.4.2 Repeatability ..... B - 4
B.4.3 Carryover ..... B - 4
B.5 Input/Output Devices. ..... B - 4
B.5.1 Keyboard ..... B - 4
B.5.2 Mouse ..... B - 4
B.5.3 External Barcode Scanner ..... B - 4
B.5.4 Printer ..... B - 4
B.5.5 USB Drive ..... B - 5
B.6 Interfaces ..... B - 5
B.7 Power Supply ..... B - 5
B.8 Fuse ..... B - 5
B.9 Temperature Protection Switch ..... B - 5
B.10 EMC Description ..... B - 5
B.11 Noise Level ..... B - 6
B.12 Normal Operating Environment ..... B - 6
B.13 Storage Environment ..... B - 6
B.14 Operating Environment ..... B - 6
B.15 Dimensions and Weight ..... B - 7
B.16 Contraindication ..... B - 7
B.17 Safety Classification ..... B - 7

C Accessories and Packing List ..... C - 1
C.1 Accessories of the Analyzer ..... C - 1
C.2 Optional Accessories of the Analyzer ..... C - 1
C.3 Packing List ..... C - 1
D Communication ..... D - 1
E Declaration of Conformity ..... E - 1
F References ..... F - 1
G Maintenance Logs ..... G - 1

1 Safety Information

1.1 Labels and Symbols on the System

⚠ CAUTION

During the daily use of the analyzer, especially the cleaning process, the operator shall ensure the intactness of the labels.

You may find the following symbols on package or the body of the instrument:

When you see...	It means...
	General warning sign ***NOTE:*** Indicates the need for the user to consult the instructions for use for important cautionary information such as warnings and precautions that cannot, for a variety of reasons, be presented on the medical device itself.
	Warning; Biological hazard
	Warning; Laser beam
	Protective earth; protective ground
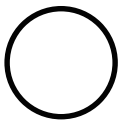	Off (Power)
	On (Power)

When you see...	It means...
	USB connection
	Computer Network
	Alternating current
SN	Serial number
	Date of manufacture
	Temperature limit
	Humidity limitation
	Atmospheric pressure limitation
	WARNING The sample probe is sharp and potentially biohazardous. Exercise caution when working around it!
严禁在仪器指示灯闪烁状态下进行更换废液桶操作！ Do not replace the waste container when the power indicator is flickering!	Biological risks (on the tube of the waste container cap assembly) Do not replace the waste container when the power indicator is flickering!

When you see...	It means...
	Fragile, handle with care
	This way up
	Keep dry
	Do not roll
	Stacking limit by number
	The following definition of the WEEE label applies to EU member states only: the use of this symbol indicates that waste electrical and electronic equipment must not be disposed of as unsorted municipal waste and must be collected separately. By ensuring that this product is disposed of correctly, you will help prevent bringing potential negative consequences to the environment and human health. For more detailed information with regard to returning and recycling this product, please consult the distributor from whom you purchased the product.
	CE mark

Figure 1-1 Warning labels on the front of main unit

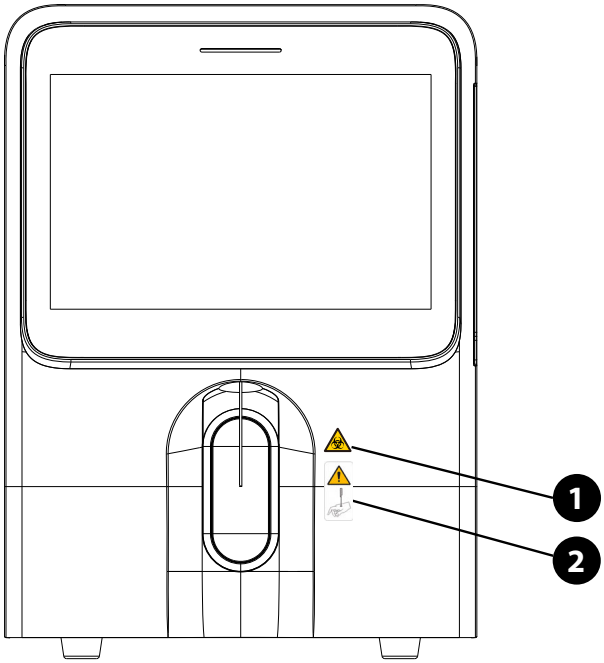

Number	Symbol	Description
1		Biological risk Potentially biohazardous
2		The sample probe is sharp and potentially biohazardous. Exercise caution when working around it!

Figure 1-2 Warning labels on the back of main unit

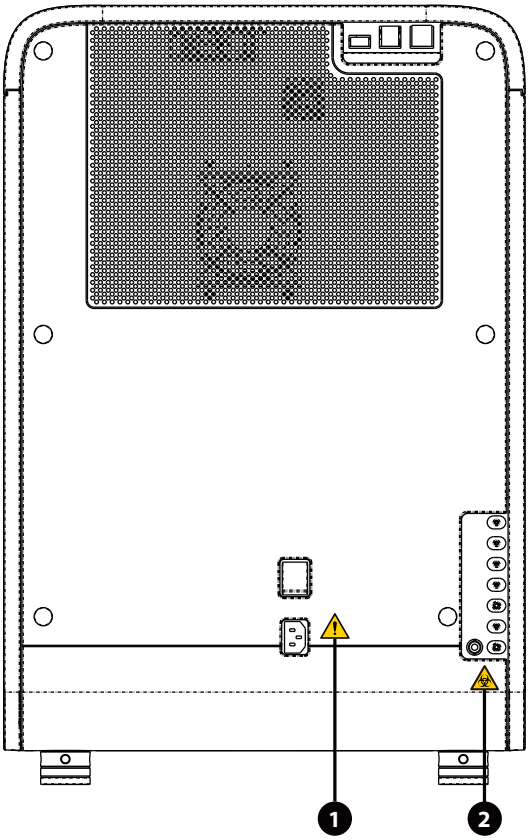

Number	Symbol	Description
1		Warning: • Connect only to a properly earth grounded outlet. • To avoid electrical shock, disconnect power prior to maintenance.
2		Biological risk Potentially biohazardous

Figure 1-3 Warning labels for moving parts

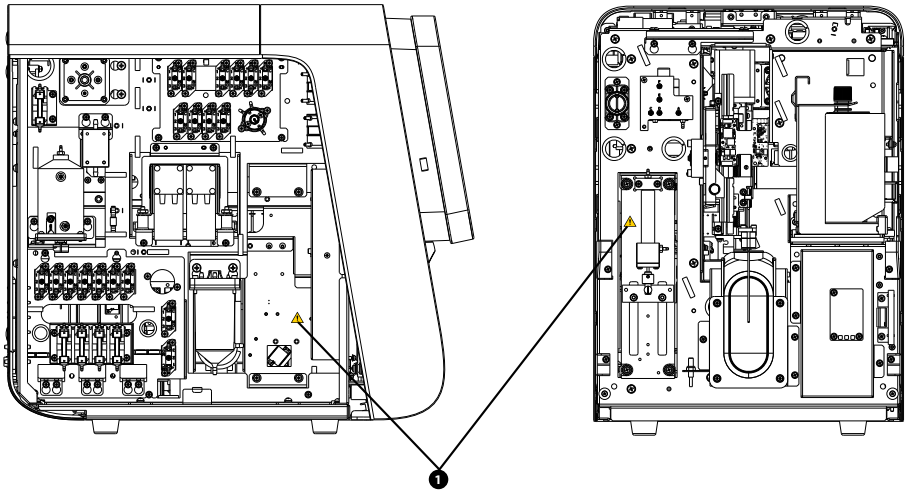

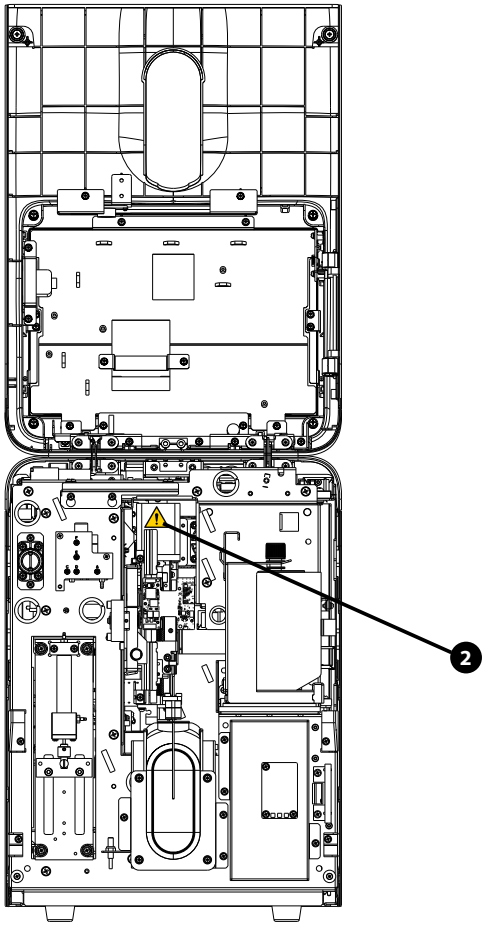

Number	Symbol	Description
1		Warning To avoid personal injury, do not put your hand under the syringe or inside the slot!
2		Warning To avoid personal injury, do not put your hand under the pipette assembly or inside the moving track!

Figure 1-4 Optical assembly laser warning labels

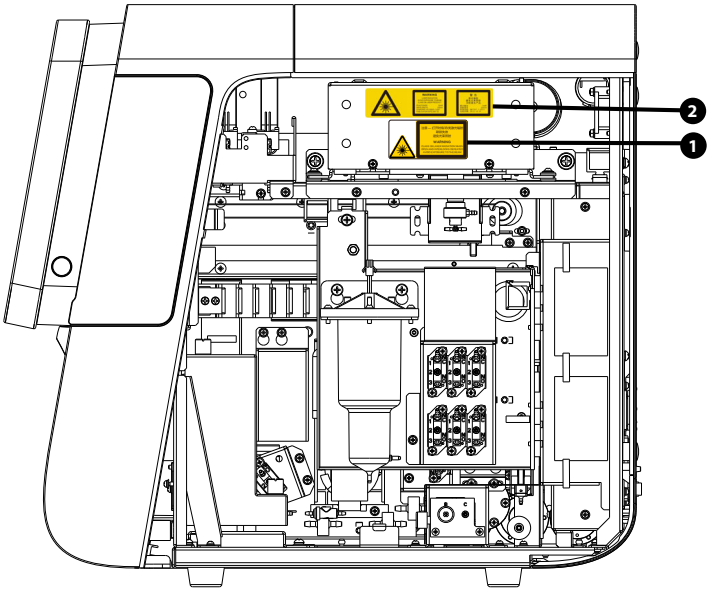

Number	Symbol	Description
1		Note: • Class 3B laser radiation when open and internal locks defeated • Avoid exposure to the beam

Number	Symbol	Description
2		Warning: • Laser radiation • Avoid exposure to beam • Class 3B laser product • Peak power: 10mW • Wavelength: 635nm

1.2 Safety-related Symbols and Messages

You will find the following symbols in this manual:

BIOLOGICAL RISK

- **Alert you to a potentially biohazardous condition.**

WARNING

- **Alert you to an operating condition that can cause death, serious personnel injury or property damage.**

CAUTION

- **Alert you to an operating condition that can cause minor personnel injury, system failure/ damage, and property damage.**

NOTE:

Alert you to information that requires your attention.

1.2.1 General Safety Messages

BIOLOGICAL RISK

- **All the samples, controls, calibrators, wastes and areas contacted them are potentially biohazardous. Wear proper personal protective equipment (e.g. gloves, lab coat, goggles, etc.) and follow safety procedures in the laboratory when handling them and the contacted areas in the laboratory.**
- **Be sure to dispose of reagents, waste, samples, consumables, etc. according to government regulations.**
- **Discard the system according to government regulations.**

⚠ WARNING

- **The fuse used in the instrument is not a replaceable one. If there is any problem with the fuse, contact Customer Service Department or your local distributor.**
- **Any serious incident that has occurred in relation to the device shall be reported to the manufacturer and the competent authority of the country in which the user and/or the animal is established.**

⚠ CAUTION

- **Be sure to operate the instrument under the situation specified in this manual. If the instrument is used in a manner not specified by the manufacturer, the protection provided by the instrument may be impaired.**
- **Be sure to use the specified external devices only, and keep them away from water.**
- **External devices connected to the analyzer and digital interfaces must be authorized and complied with relevant safety and EMC standards (e.g. IEC 62368-1 Safety of Information Technology instrument Standard and CISPR 32 EMC of Information Technology instrument Standard (Class B)). Any persons who connects additional instrument to the signal input or output ports and configures a system, is responsible for ensuring that the system works normally and complies within the safety and EMC requirements. If you have any questions, consult the technical service department of your local representative.**
- **Make sure all the safety measurements are adopted. It is prohibited to disable any safety device or sensor.**
- **Keep your clothes, hairs and hands away from the moving parts to avoid injury.**
- **Be sure to use the instrument under specified environment in this manual. If not, the instrument may not work properly, the measurement may be unreliable, thus causing damage to the instrument and harm to the body.**
- **This instrument is intended to be used by clinical laboratory professionals trained by Mindray Animal Medical or Mindray Animal Medical-authorized distributors.**
- **When power cut occurs suddenly, turn off the instrument immediately.**
- **The instrument must be within the calibration validity period; otherwise, the measurement results may be inaccurate.**

1.2.2 Analyzer Transportation and Installation-related Safety Messages

⚠ WARNING

- **When installing the instrument, ensure that the power switch is in close proximity to the instrument and within your easy access.**
- **Before turning on the instrument, make sure the input voltage meets the requirements.**

⚠ CAUTION

- **Unpacking, installation or transportation by personnel not authorized or trained by Mindray Animal Medical may cause personal injury or damage your instrument. Do not unpack, transport or install your instrument without the presence of Mindray Animal Medical-authorized personnel.**

- **The installation, authorization, upgrade and modification of the system software must be performed by personnel authorized by Mindray Animal Medical. Make sure to install only Mindray Animal Medical-authorized software.**
- **Using pinboard may bring electrical interference and the analysis results may be unreliable. Place the analyzer near the electrical outlet to avoid using the pinboard.**
- **Use the power cord provided by the manufacturer. Using the power cord other than provided by the manufacturer may lead to system damage or unqualified smear output.**
- **When connecting the reagents, make sure the color of the reagent container cap assembly is the same as that of the reagent inlet to which it is connected.**
- **Check if the reagent tubes are properly connected before using the system. Otherwise, the results may be inaccurate.**

1.2.3 Safety Messages Related to Reagents, Controls, and Calibrators

⚠ CAUTION

- **The reagents are irritating to eyes, skin and airway. Wear proper personal protective equipment (e.g. gloves, lab coat, goggles, etc.) and follow safe laboratory procedures when handling them and the contacted areas in the laboratory. If reagents accidentally spill on your skin or in your eyes, rinse the area with ample amount of clean water, and seek medical attention immediately.**
- **Use the reagents, controls and calibrators specified by the manufacturer only. Using other reagents, controls and calibrators, may lead to system damage and inaccurate measurement, control and calibration results.**
- **Pay attention to the expiration dates and open-container stability days of all the reagents. Be sure not to use expired reagents. Otherwise, the results may be inaccurate.**
- **To ensure measurement accuracy, do not mix the new container of reagent with the residue in the replaced container to ensure accurate measurement, and prevent reagents from pollution following safe laboratory procedures.**

1.2.4 Maintenance-related Safety Messages

☣ BIOLOGICAL RISK

- **Mindray Animal Medical does not claim the validity of the listed chemicals in infection control. For effective control of infection, please consult the Infection Prevention Department of the hospital or the epidemic professionals.**
- **Remove the waste container cap and replace the waste container only when the power indicator is not flickering, in order not to make the waste overflow from the container.**
- **If the waste is discharged using waste container, make sure the pickup tube of the waste container cap assembly is above, and the tube is smooth and not bent.**
- **After replacing the reagent container/bag, check the tubing connected to the cap assembly and make sure it is not bent over.**

⚠ CAUTION

- **Improper maintenance may damage the analyzer. Operators must follow the instruction of this Operator's Manual to perform maintenance operations. For problems not mentioned in this manual, contact Customer Service Department for service advice.**

- **Only parts supplied by Mindray Animal Medical can be used for maintenance. For any question, contact Customer Service Department.**
- **If you accidentally spill hazardous material (for example, reagents or samples) on the instrument, clean the instrument with specified disinfectant. Wear proper personal protective equipment (e.g. gloves, lab coat, etc.) and follow safe laboratory procedures when handling them and the contacted areas in the laboratory.**
- **The user shall perform regular cleaning and sterilization to the cover of the instrument. Use the specified materials to sterilize the instrument only. For any damage to the instrument or other accidents caused by using materials other than specified, Mindray Animal Medical will not provide any warranty.**
- **The cleaning and sterilization may damage the instrument to some extent. It is recommended to perform sterilization only when necessary according to your laboratory protocol. Remember to clean the instrument before sterilizing.**
- **Do not use any decontamination or cleaning agents which could cause a HAZARD as a result of a reaction with parts of the instrument or with material contained in it.**
- **Only use the accessories and consumables manufactured or recommended by Mindray Animal Medical to achieve the promised system performance and safety. For more information, contact Customer Service Department or your local distributor.**
- **If any of the pipes or fluidic components are worn out, stop using the analyzer and contact Customer Service Department immediately for inspection or replacement.**
- **When the power indicator is flickering, it indicates that the sample probe is lowering down. Be sure your hand is away from the sample probe during the process, otherwise, your hand may be hurt.**

1.2.5 Laser Warning

Class 1 laser product

NOTE:

- Class 3B laser radiation when open and interlocks defeated.
- Avoid exposure to the beam
- Optical density: OD4+
- Radiation exposure level: 56.77mW/cm^2
- Max. output: 10mW
- Wavelength: 635nm
- Standard: IEC 60825-1
- Publication date: 2007.03
- Use goggles when necessary

⚠ WARNING

- **This product is a CLASS 1 embedded laser product. When opened or when the interlock defeated, there is Class 3B laser radiation. Users must not open, disassemble or damage the interlock device; otherwise may be exposed to laser. For any further information or questions, please contact Customer Service Department.**

NOTE:

The service and maintenance of the laser product must be handled by professionals. Return the product to Customer Service Department for service and maintenance.

1.2.6 Network Security

⚠ WARNING

- **The instrument software uses closed-loop operating system, meaning that the applications of the instrument works in exclusive mode and is free from other application's disturbance. Users can only operate the software interface but cannot directly access the operating system or install software. Therefore, the system is far less vulnerable to viruses, spyware, or malware attacks.**
- **When the instrument connects to an external computer, install anti-virus software on the computer and scan for viruses and update patches periodically. Do not use it for unintended purposes.**
- **Data transmission must be performed in a closed-loop network or virtual network. The network must be isolated.**
- **Users have the responsibility to protect the network authentication information, such as password and user information, from being obtained by unauthorized personnel.**

2 Using This Manual

2.1 Overview

This chapter explains how to use your Operator's Manual of BC-60R Vet Auto Hematology Analyzer (hereby referred to as “the analyzer”). The manual is shipped with your product and describes the purpose, functions, and operations of the product. Read this manual carefully before operating your analyzer to ensure that the analyzer can be operated strictly as instructed in this manual to bring its performance to full swing and guarantee operator’s safety.

NOTE:

This manual describes the use, functions and operation methods of the product based on the most complete configuration; and some of the content may not be applicable to your product. Contact Mindray Animal Medical if you have any questions.

2.2 Who Should Read This Manual

This manual is intended to be read by clinical laboratory professionals to:

- learn about the analyzer hardware and software;
- set up system parameters;
- perform daily operating task;
- perform system maintenance and troubleshooting.

2.3 How to Find Information

Refer to the table below to find the information you need.

If you want to…	Please...
learn about the safety messages of the analyzer	see “1 Safety Information”
learn about instructions for this manual	see “2 Using This Manual”
learn about the intended use and parameters of the analyzer	see “3 Understanding Your System”
learn about the hardware and software of the analyzer	see “3 Understanding Your System”
learn about how the analyzer works (its measurement principles and processes)	see “4 Understanding the System Principles”
learn about the installation requirements of the analyzer	see “5 Installing and Connecting the System”

If you want to…	Please...
learn about how to define/adjust system settings	see “6 Customizing the Analyzer Software”
learn about how to collect, prepare, analyze the samples as well as daily operations of the analyzer	see “7 Operating Your Analyzer”
learn about how to review the saved analysis results	see “8 Reviewing Sample Results”
learn about basic requirements of quality control and quality control methods of the hematology analyzers	see “9 Using the QC Program”
learn about how to calibrate the analyzer	see “10 Calibrating Your Analyzer”
learn about how to use the quality control programs of the analyzer	see “11 Printing”
learn about how to maintain/service the analyzer	see “12 Service”
learn about the troubleshooting methods of the analyzer	see “13 Troubleshooting”
learn about the technical specifications of the analyzer	see “B Specification”

2.4 Conventions Used in This Manual

This manual uses certain typographical conventions to clarify meaning in the text:

Format	Meaning
[××]	All capital letters enclosed in [ ] indicate a key name (either on the pop-up keyboard or the external keyboard), such as [ENTER].
“××”	Letters included in “ ” indicate text you can find on the screen of the analyzer.
“×× > ×× > ××”	Select a submenu item according to the path.

All illustrations in this manual are provided as examples only. They may not necessarily reflect your analyzer setup or data displayed on the screen of the analyzer.

3 Understanding Your System

3.1 Intended Use

This analyzer provides Complete Blood Count, Leukocyte Differential, Hemoglobin Concentration Measurement, and Reticulocyte Measurement for animal blood samples.

3.2 Test Parameters

The analyzer outputs the following test parameters in blood sample analysis.

3.2.1 Blood Sample Test Parameters, Histograms, and Scattergrams

Table 3-1 Blood sample test report parameters

Group	Name	Abbreviation
WBC group (11 items)	White blood cell count	WBC
	Neutrophil count	Neu#
	Lymphocyte count	Lym#
	Monocyte count	Mon#
	Eosinophil count	Eos#
	Basophil count	Bas#
	Neutrophil percentage	Neu%
	Lymphocyte percentage	Lym%
	Monocyte percentage	Mon%
	Eosinophil percentage	Eos%
	Basophil percentage	Bas%
RBC group (8 items)	Red blood cell count	RBC
	Hemoglobin concentration	HGB
	Mean corpuscular volume	MCV
	Mean corpuscular hemoglobin	MCH
	Mean corpuscular hemoglobin concentration	MCHC
	Red blood cell distribution width coefficient of variation	RDW-CV
	Red blood cell distribution width standard deviation	RDW-SD
	Hematocrit	HCT
Platelet group (7 items)	Platelet count	PLT
	Mean platelet volume	MPV
	Platelet distribution width	PDW
	Plateletcrit	PCT
	Platelet-large cell ratio	P-LCR
	Platelet-large cell count	P-LCC
	Immature platelet fraction	IPF

Table 3-1 Blood sample test report parameters

Group	Name	Abbreviation
RET group (7 items)	Reticulocyte count	RET#
	Reticulocyte percentage	RET%
	Reticulocyte hemoglobin expression	RHE
	Immature reticulocyte fraction	IRF
	Low fluorescent ratio	LFR
	Middle fluorescent ratio	MFR
	High fluorescent ratio	HFR

NOTE:

The P-LCR and P-LCC parameters are not applicable to blood samples of cats

Table 3-2 Blood sample test RUO parameters

Name	Abbreviation
Optical red blood cell count	RBC-O
Optical platelet count	PLT-O
Platelet count- impedance	PLT-I
Optical white blood cell count	WBC-O
White blood cell count -DIFF	WBC-D
Reticulocyte production index	RPI
Immature platelet count	IPF#
Mean reticulocyte volume	MRV
Platelet distribution width standard deviation	PDW-SD

NOTE:

RUO parameters are for research purpose only. They cannot be used for diagnosis purpose.

Table 3-3 Blood sample test histogram

Name	Abbreviation
White Blood Cell Histogram	WBC Histogram
Platelet Histogram	PLT Histogram

Table 3-4 Blood sample test scattergrams

Name	Abbreviation
Differential scattergram	DIFF Scattergram
Reticulocyte scattergram	RET Scattergram
Optical platelet scattergram	PLT-O Scattergram
Reticulocyte - extension scattergram	RET-EXT Scattergram

3.3 Description

3.3.1 Structure and Components

This analyzer consists of the sample processing unit, data management unit, result output unit, and the accessories.

3.3.2 Modules and Components

Figure 3-1 Front of the analyzer

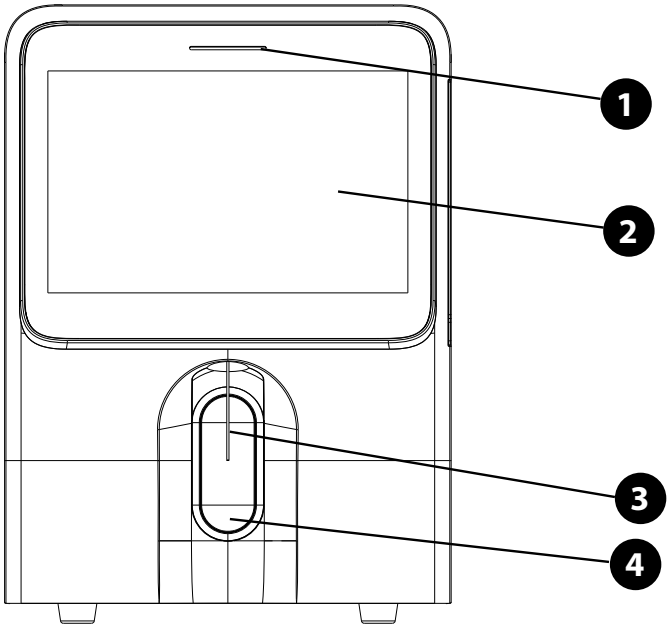

No.	Name	Description	
1.	Status indicator	The indicator locates on the top of the touch screen; and it tells you about the status of the instrument including ready, running, error, standby and on/off, etc.	Ready: indicator stays in green
			Running: indicator flickers in green
			Sample probe piercing: indicator flickers fast
			Error: indicator stays in red
			Sleep: indicator stays in orange
			Off: indicator off
2.	Touch screen	The touch screen locates on the front of the main unit, which can be used to operate the instrument and display information.	/
3.	Sample probe	The sample probe locates on the lower front of the main unit, which aspirates samples and adds diluent.	/
4.	Aspirate button	The [Aspirate] button is behind the sample probe. Press the key to start aspirating and measurement or add diluent	/

Figure 3-2 Back of the analyzer

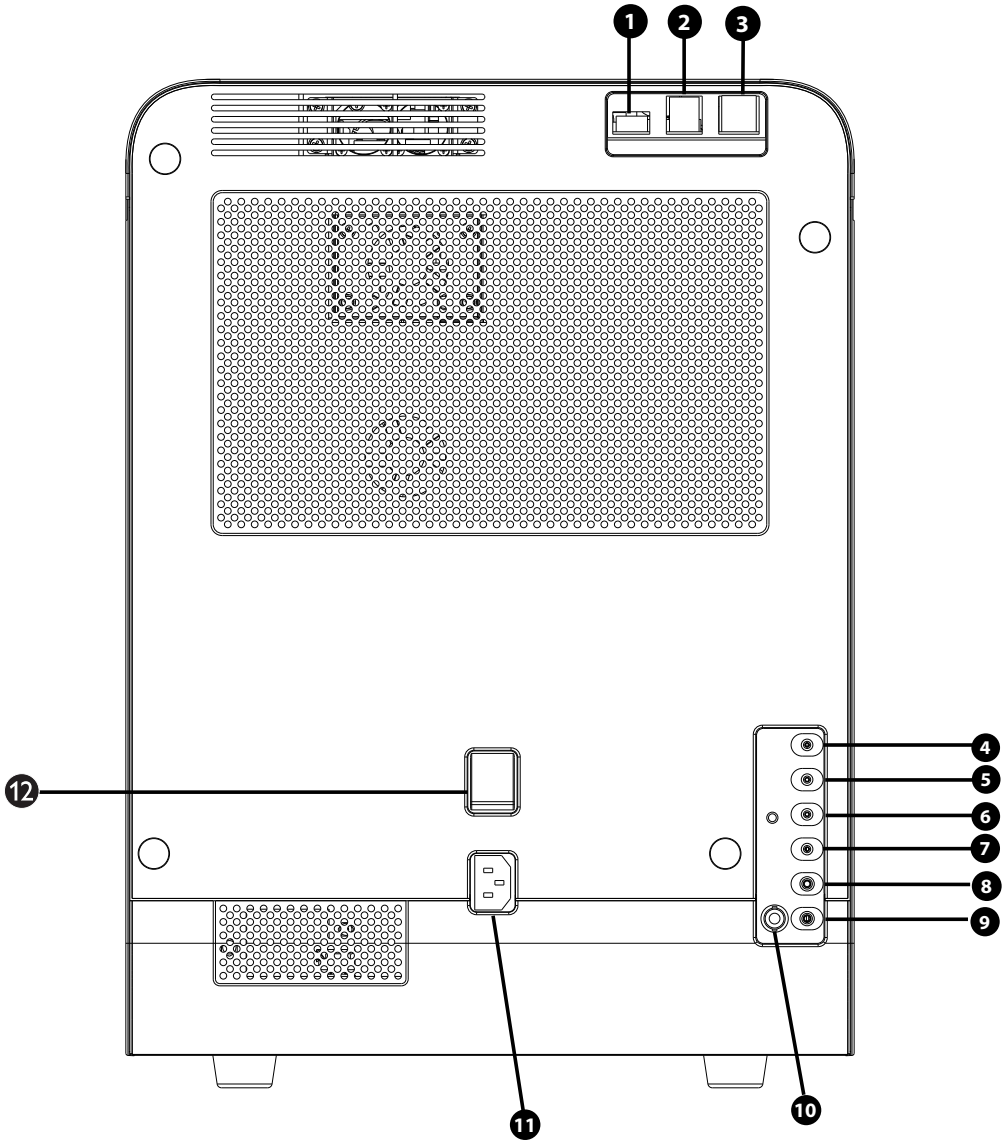

No.	Name
1.	USB port (protocol 3.0)
2.	USB port (protocol 2.0)
3.	Network interface
4.	V-6 DR DILUENT inlet
5.	V-6 LD LYSE inlet
6.	V-6 LH LYSEinlet
7.	V-6 Solution Reagent inlet
8.	V-6 DS DILUENTinlet
9.	Waste outlet

No.	Name
10.	Waste sensor
11.	Power inlet
12.	Power switch

Figure 3-3 Right side of the analyzer (with the cover opened)

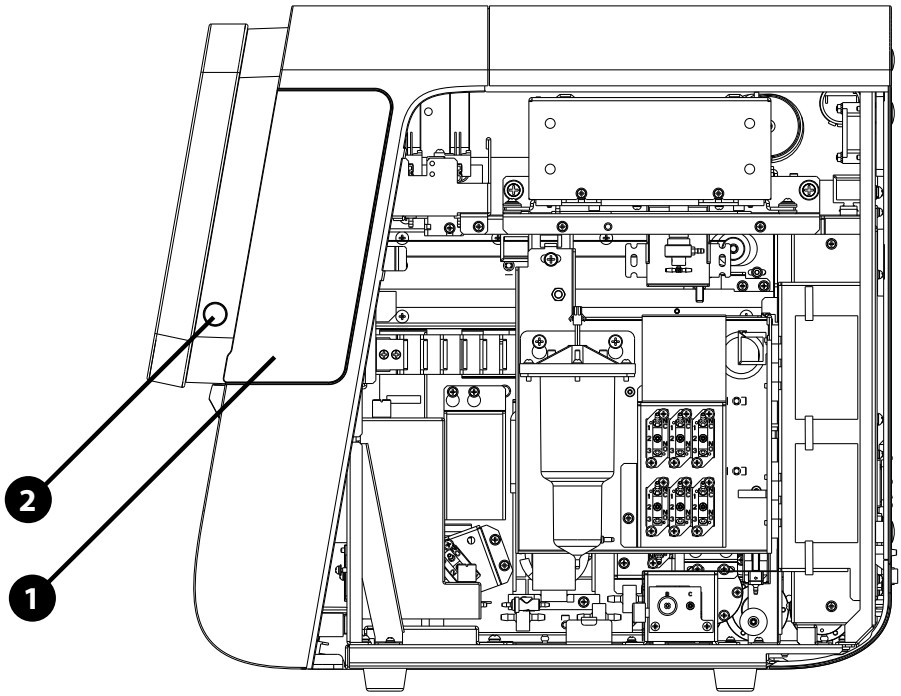

No.	Name
1.	Dye compartment door
2.	Standby button

Figure 3-4 Left side of the analyzer (with the cover opened)

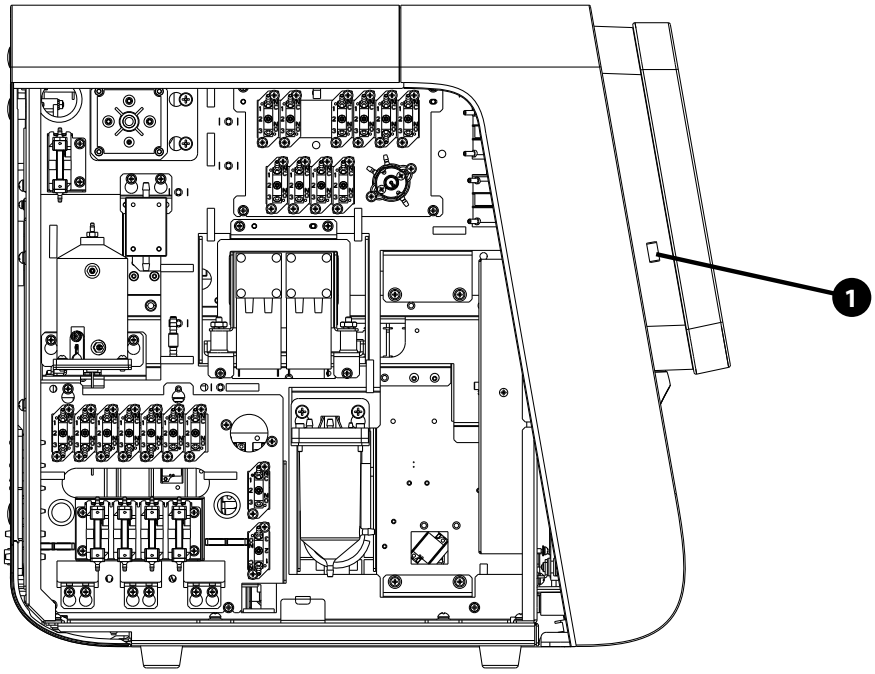

No.	Name
1.	USB port (protocol 2.0)

3.3.3 Accessories

For the configured and optional accessories of this analyzer, see “C Accessories and Packing List”.

3.4 Overview of Software Interfaces

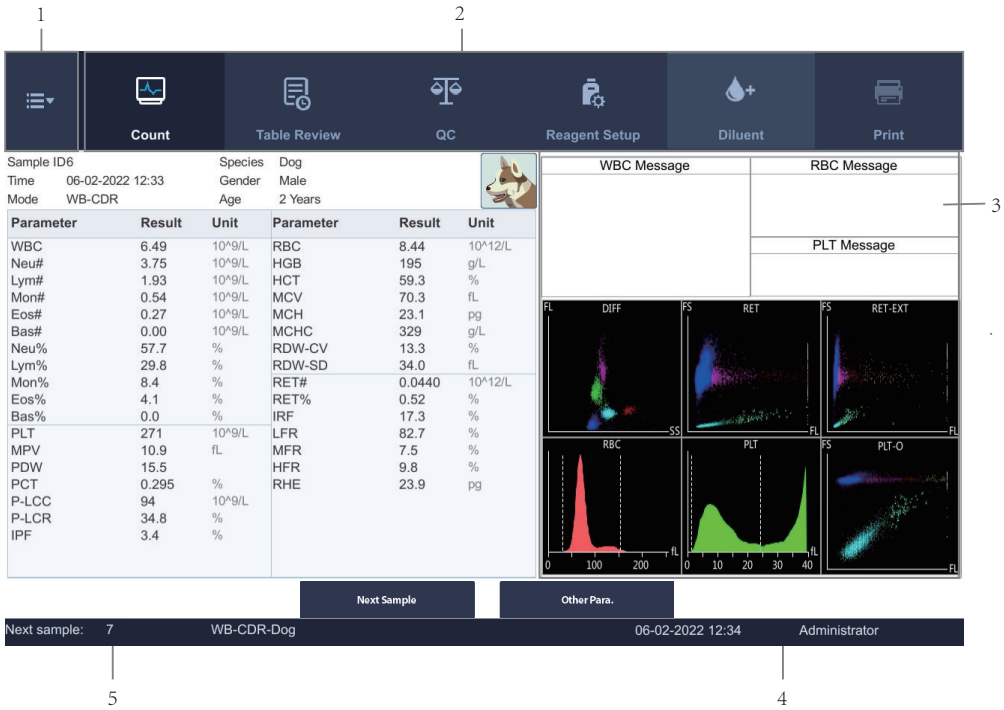

1. Menu

Tap the "**Menu**" button at the top left of the software screen to display the system menu. Below describes the software functions and operator access of the analyzer.

No.	Level 1	Level 2	Level 3
1	**Count**	/	/
2	**Table Review**	/	/
3	**QC**	**Setup**	/
		Count	/
4	**Calibration**	**Manual**	/
		Calibrator (Administrator)	/
		Calibration History (Administrator)	/

No.	Level 1	Level 2	Level 3
5	**Status**	**Statistics**	/
		Temp.&Pressure (Administrator)	/
		Floater Status (Administrator)	/
		Sensor (Administrator)	/
		Voltage & Current (Administrator)	/
		Version Info.	/
6	**Setup**	**System Setup**	**Print Setup**
			Communication (Administrator)
			Date/Time Setup
			Lab Info. Setup
			Flag Alarm Sensitivity (Administrator)
		User Management	/
		Manage Animal Type	/
		Auxiliary Setup	/
		Para. Setup	**Parameter Unit Setup**
			Ref. Range Setup
			Microsco. Para. Setup (Administrator)
		Maintenance (Administrator)	/
		Reagent Setup	/
		Gain Setup (Administrator)	/
		Auto Startup/Shutdown (Administrator)	/
7	**Service**	**Debug & Self-Test**	**Self-Test**
		Maintenance	/
		Screen Cal.	/
		Log	/
8	**Logout**	/	/
9	**Shutdown**	/	/

NOTE:

When a function is followed by "**Administrator**", it means the function is only available to operators at administrator's level.

2. Utility Button area

Name	Icon	Functions
Count	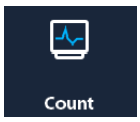	Tap to enter the "**Count**" screen.
Table Review		Tap to enter the "**Table Review**" screen.
QC		Tap to enter to enter the "**QC**" screen. When the "**QC**" button lighted in orange, it means the analyzer is out of quality control.
Reagent Setup		Tap to enter the "**Reagent Setup**" screen. When the "**Reagent Setup**" button lights in orange, it means some reagent is expired or not sufficient.
Diluent		Tap to enter the "**Diluent**" screen.
Print		• When the analyzer is on the "**Count**" screen, tap the "**Print**" button to print the analysis results, histograms and scattergrams of the current sample in accordance with operator-customized print template. • When the analyzer is on the "**Table Review**" screen, tap the "**Print**" button to print the analysis results for all or selected samples in the table print or graph print form. • When the analyzer is on the "**Graph**" screen, tap the "**Print**" button to print the analysis results, histograms and scattergrams of the current sample in accordance with operator-customized print template. • When the analyzer is on the "**QC Table**" screen, tap the "**Print**" button to print all QC results included in the selected QC file. • When the analyzer is on the "**QC Graph**" screen, tap the "**Print**" button to print the QC graphs included in the selected QC file. • When the analyzer is on the "**Manual**" screen, tap "**Print**" to print the manual calibration factors.

3. Operation area

Displays contents of the screens.

For example, on the "**Count**" screen, the area displays function buttons related to sample analysis as well as the sample analysis results.

4. Other information
   - It displays the current system time.
   - When error occurs, the area displays the error message.
   - When logged in as an administrator, the area displays "**Administrator**".
5. Auxiliary information area

   This area displays auxiliary information of the current screen;
   - For example, on the "**Count**" screen, the area displays the ID and analysis mode of the next sample; on the "Table Review" or "Graph Review" screen, the area displays position of the current sample and total number of samples

3.5 Reagents, Controls and Calibrators

As the analyzer, reagents, controls and calibrators are components of a system, performance of the system depends on the combined integrity of all components. You must only use the Mindray Animal Medical-specified reagents, controls, and calibrators which are formulated specifically for the fluidic system of your analyzer in order to provide optimal system performance. Do not use the analyzer with reagents, controls, and calibrators from multiple suppliers. In such case, the analyzer may not meet the performance specified in this manual and may provide unreliable results.

All the reagents, controls, and calibrators mentioned in this manual refer to the reagents, controls, and calibrators specifically formulated for this analyzer. You must buy those reagents, controls, and calibrators from Mindray Animal Medical or Mindray Animal Medical-authorized distributors. When you need to buy reagents and consumables, please contact Customer Service Department.

3.5.1 Reagents

All reagents used with the analyzer are special supporting reagents for Mindray Animal Medical equipment. Use for any other purposes is prohibited.

Please use and store each type of reagents correctly according to their instructions.

NOTE:

- For the reagent model, intended use, test principle, main components, storage conditions, validity period, applicable instruments, and other information, please refer to the reagent IFU.
- For any questions related to reagents, controls, and calibrators, please consult your local distributors

Table 3-5 Reagents

Applicable Channel	Model	Name
Diluent	V-6 DS	V-6 DS DILUENT
DIFF channel	V-6 LD	V-6 LD LYSE
	V-6 FD	V-6 FD DYE
HGB channel	V-6 LH	V-6 LH LYSE
RET channel	V-6 FR	V-6 FR DYE
	V-6 DR	V-6 DR DILUENT

Table 3-5 Reagents

Applicable Channel	Model	Name
Solution	V-6 SR	V-6 Solution Reagent
Probe cleanser	V-P	V-P Probe cleanser

3.5.2 Controls and Calibrators

The controls and calibrators are used to verify accurate operation and calibration of the analyzer.

The controls are suspension of simulated animal blood, specifically manufactured to monitor and evaluate the analysis precision of the analyzer. The controls are prepared with three levels, namely low, normal and high. Daily use of all levels verifies the operation of the analyzer and ensures reliable results are obtained. The calibrators are commercially prepared whole-blood products used to calibrate some parameters (WBC, RBC, HGB, MCV and PLT etc.) of analyzer to build the metrological traceability of analysis results. For the use and storage of controls and calibrators, please refer to the Instruction for Use of each product.

All references related to controls in this manual refer to the “controls” and “calibrators” specifically formulated for this analyzer by Mindary Animal Medical. You must buy those controls and calibrators from Mindary Animal Medical or Mindary Animal Medical-authorized distributors.

The following models of controls and calibrators are used with the analyzer:

Table 3-6 Information on Controls and Calibrators

Name	Model
Control	BC-6D
	BR60
	BC-RET
Calibrator	SC-CAL PLUS

NOTE:

For the specific test parameters and reference values of parameters, see the reference value sheets of controls and calibrators.

4 Understanding the System Principles

4.1 Overview

The analyzer uses sheath flow impedance method, laser scatter method, and SF Cube cell analysis technology for cell differentiation and counting. Colorimetric method is adopted for HGB measurement. Based on the above data, the analyzer calculates other parameters.

4.2 WBC Measurement

4.2.1 SF CUBE Cell Analysis Technology

Figure 4-1 Laser Flow Cytometry

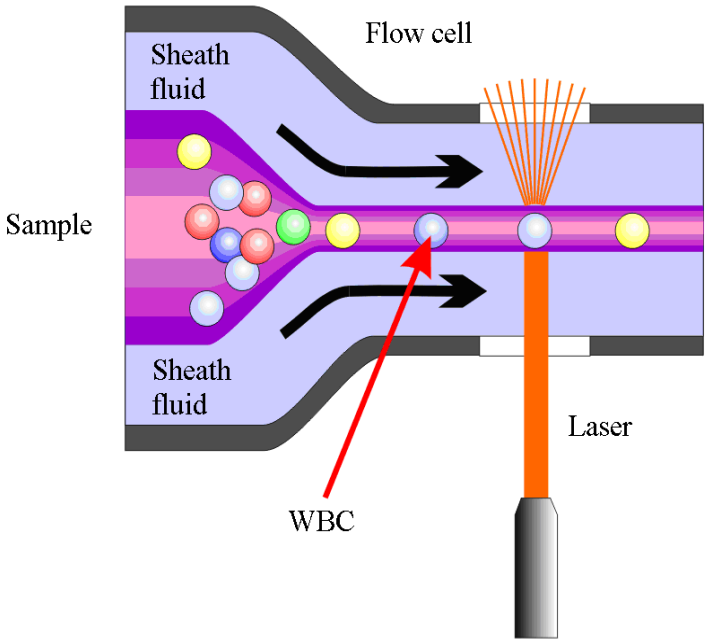

In normal peripheral blood, white blood cells can be classified into five categories: lymphocytes, monocytes, neutrophils, eosinophils and basophils. Analyzing all types of white blood cells will provide a great deal of useful information for the clinical diagnosis of diseases. Under the influence of certain diseases, the peripheral blood may contain various abnormal cells apart from the five subpopulations of normal cells, such as atypical lymphocytes, immature cells, etc. Most of these abnormal cells are different kinds of immature cells in the cell generation process. But what they have in common is they contain a great deal of nucleic acid (DNA and RNA), the content of which decreases as the cell gets maturer. Therefore, normal cells and immature cells can be differentiated by detecting the content of nucleic acid in the cells.

The analyzer adopts the SF Cube cell analysis technology to accurately recognize and detect the immature cells in blood based on WBC 5-part differentiation.

Figure 4-2 SF Cube Technology

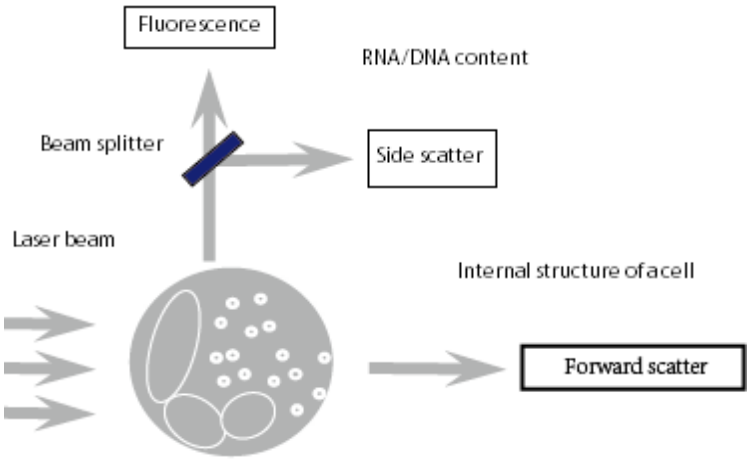

The analyzer adopts the fluorescent staining technology in its DIFF channels. The RBCs are lysed and the WBC subpopulations are made different in size and complexity by the lyse; the nucleic acid substances in WBCs are marked by the new asymmetric cyanine fluorescent substance. Due to the different content of nucleic acid in different WBC subpopulations, maturity stages or abnormal development status, the volume of fluorescent dye staining the nucleic acid substances is different; the front scatter reflects the cell size, the side scatter reflects the intracellular granularity, and the intensity of fluorescent signal reflects the degree that the cell is stained. By sensing the difference in signal in three dimensions of the cells processed with lyse, the DIFF channel differentiates the subpopulations of WBCs (lymphocytes, monocytes, neutrophil, eosinophils and basophils), and provides flogs for suspected band cells, atypical lymphocytes, immature granulocytes and nucleated red blood cells.

The lymphocytes are smaller in size with the nucleus taking most part of them. Lymphocytes have a high nucleus-to-cytoplasm ratio, but their nucleic acid content is low. Therefore, they are at a lower position in the direction of fluorescence and side scatter. The monocytes are larger in size, with high nucleus-to-cytoplasm ratio and high nucleic acid content, and less complex in structure. Therefore, they are at a higher position in the direction of fluorescence, and have stronger side scatter. The neutrophils and basophils are larger in size, and have medium nucleus-to-cytoplasm ratio and low nucleic acid content. Therefore, they are at a lower position in the direction of fluorescence, but they have stronger side scatter. The volume and nucleus-to-cytoplasm ratio of the eosinophils are similar to those of the neutrophils. Eosinophils have a relatively low nucleic acid content, but they contain a lot of alkaline grains, so they have very strong side scatter.

4.2.2 Derivation of WBC-Related Parameters

Figure 4-3 DIFF Scattergram

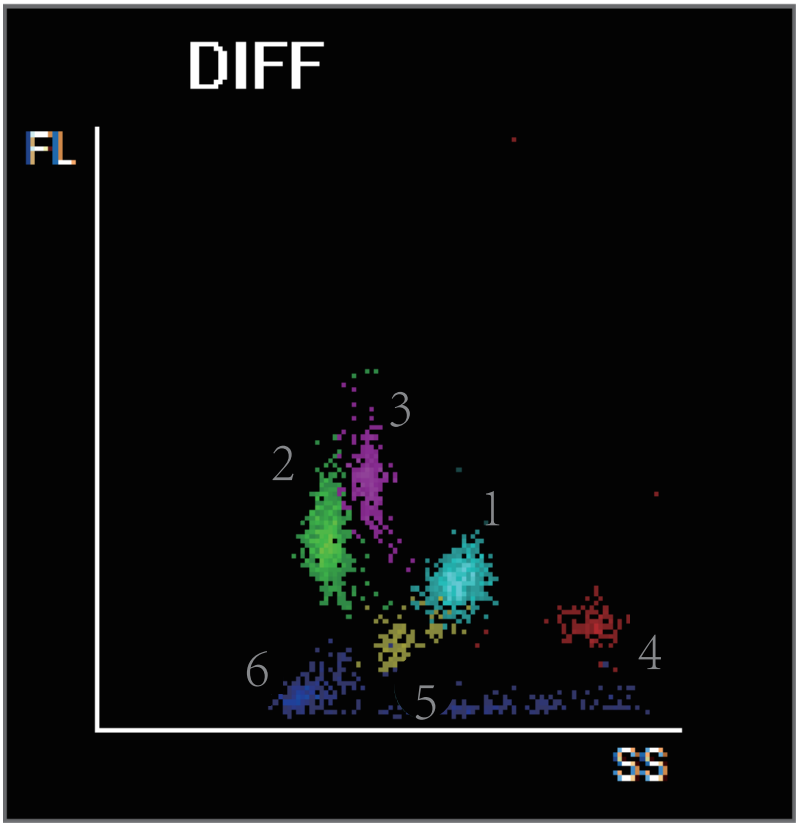

1. Neu region
2. Lym region
3. Mon region
4. Eos region
5. Baso region
6. Ghost region

Parameters	Name	Formula/Test Methods	Unit
WBC	White blood cell count	WBC = Sum of all particles in the WBC region in the DIFF channel	10^9/L
Bas#	Basophil count	Bas# = WBC x Bas%	10^9/L
Bas%	Basophil percentage	$\text{Bas\%} = \frac{\text{Particles in the Bas reagion in the DIFF channel}}{\text{Sum of all particles in DIFF channel except those in Ghost reagion}} \times 100\%$	%
Neu#	Neutrophil count	Neu# = WBC x Neu%	10^9/L
Neu%	Neutrophil percentage	$\text{Eos\%} = \frac{\text{Particles in the Eos reagion in the DIFF channel}}{\text{Sum of all particles in DIFF channel except those in Ghost reagion}} \times 100\%$	%
Eos#	Eosinophil count	Eos# = WBC x Eos%	10^9/L

Parameters	Name	Formula/Test Methods	Unit
Eos%	Eosinophil percentage	$\text{Eos\%} = \frac{\text{Particles in the Eos reagion in the DIFF channel}}{\text{Sum of all particles in DIFF channel except those in Ghost reagion}} \times 100\%$	%
Lym#	Lymphocyte count	Lym# = WBC x Lym%	10^9/L
Lym%	Lymphocyte percentage	$\text{Lym\%} = \frac{\text{Particles in the Lym reagion in the DIFF channel}}{\text{Sum of all particles in DIFF channel except those in Ghost reagion}} \times 100\%$	%
Mon#	Monocyte count	Mon# = WBC x Mon%	10^9/L
Mon%	Monocyte percentage	$\text{Mon\%} = \frac{\text{Particles in the Mon reagion in the DIFF channel}}{\text{Sum of all particles in DIFF channel except those in Ghost region}} \times 100\%$	%

4.3 Hemoglobin Concentration Measurement

4.3.1 A Test Model Using the Colorimetric Method

Figure 4-4 Colorimetric method

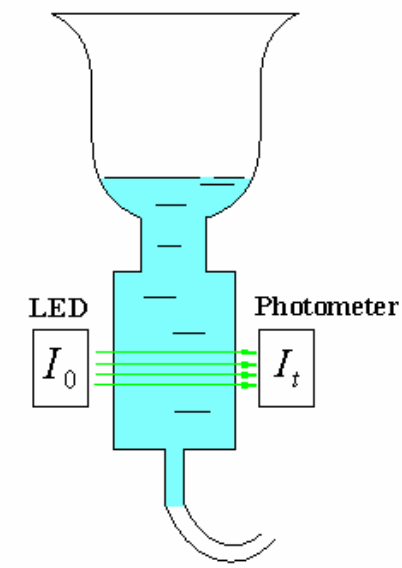

$$A = \lg \frac{I_o}{I_t} = k \times C \times L$$

According to the Lambert-Beer Principle, when a beam of monochromatic light passes through a well-proportioned non-scattering light-absorbing solution, the absorbance A is proportional to the product of the thickness L and the concentration C. The sample in the HGB channel acts as the light

absorbing substance after being treated by reagent, therefore the HGB concentration can be measured by measuring the absorbance.

4.3.2 Derivation of HGB

Hemoglobin Concentration (HGB) is calculated using the following equation and expressed in g/L.

Parameters	Name	Formula/Test Methods	Unit
HGB	Hemoglobin Concentration	$\text{HGB} = \text{Constant} \times \text{Ln}\left(\frac{\text{Blank Photocurrent}}{\text{Sample Photocurrent}}\right)$	g/L

4.4 RBC/PLT Measurement

4.4.1 Sheath Flow Impedance Method

Figure 4-5 Sheath flow impedance method

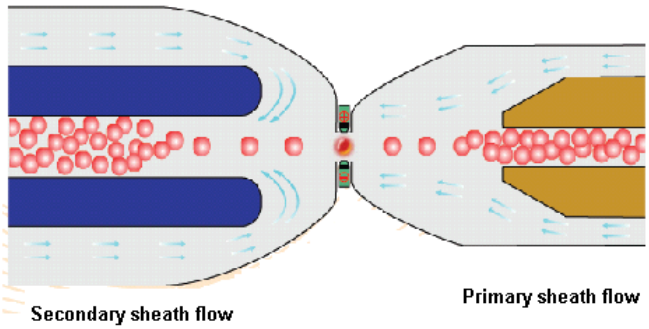

RBCs/PLTs are counted by the sheath flow impedance method. A sensor is designed to enable the RBCs and PLTs to pass through the aperture one by one in a queue under the “focusing” effect of fluid, during which process pulses will be generated according to the Coulter Principle. The backend processor amplifies the pulses and compares them with the voltage thresholds of the RBC/PLT channel, and then the number of pulses in the RBC/PLT channel is calculated. That is to say, the pulses collected are sorted per the voltage thresholds of different channels, the number of pulses falling in the range of the RBC/PLT channel is the number of RBC/PLT. The number of cells in each channel defines the volume distribution of cells. The analyzer presents the RBC/PLT histogram, whose x-coordinate represents the cell volume (fL) and y-coordinate represents the number of the cells.

Compared with the common impedance method, the sheath flow impedance method is featured by higher efficiency, better signal quality, more accurate analysis results and lower consumption of reagents.

4.4.2 SF CUBE Cell Analysis Technology

The RET channel also adopts the SF CUBE Cell Analysis Technology. The general measurement principle in RET channel is similar to that of DIFF channel, only that in the RET channel, the RBCs are not lysed, but are spherized by RET diluent. Then the nucleic acid of the spherized RBCs and the PLTs are stained by fluorescent dyes.

4.4.3 RBC-Related Parameters

Parameters	Name	Formula/Test Methods	Unit
RBC	Red Blood Cell count	Red blood cell (RBCs) number is measured directly by the number of pulse in RBC channel	10^{12}/L
MCV	Mean Corpuscular Volume	Calculated based on the red blood cell histogram	fL
HCT	Hematocrit	$HCT = \frac{RBC \times MCV}{10}$	%
MCH	Mean Corpuscular Hemoglobin	$MCH = \frac{HGB}{RBC}$	pg
MCHC	Mean Corpuscular Hemoglobin Concentration	$MCHC = \frac{HGB}{HCT} \times 100$	g/L
RDW-CV	Red Blood Cells Distribution Width - Coefficient of Variation	RBC Histogram	%
RDW-SD	Red Blood Cells Distribution Width - Standard Deviation	Derived based on the standard deviation of red blood cell volume distribution	fL

4.4.4 PLT-Related Parameters

Parameters	Name	Formula/Test Methods	Unit
PLT	PLT count	• Method 1:The analyzer directly measures the number of pulses in PLE channel • Method 2: By combining the large-size platelet count result in DIFF channel and platelet count result in the impedance channel, the analyzer provides PLT count	10^9/ L
MPV	Mean Platelet Volume	Mean Platelet Volume (MPV) is calculated based on the PLT histogram	fL
PDW	Platelet Distribution Width	Platelet distribution width is derived from the platelet histogram, and is reported as 10 geometric standard deviation (10 GSD)	/
PCT	Plateletcrit	$PCT = \frac{PLT \times MPV}{10000}$	%
P-LCR	Platelet-large cell ratio	P-LCR is derived from the platelet histogram	%
P-LCC	Platelet-large cell count	P-LCC = PLT x P-LCR	10^9/ L

Parameters	Name	Formula/Test Methods	Unit
IPF	Immature Platelet Fraction	The parameter is derived based on PLT-O scattergram: $IPF = \frac{\text{Immature platelet number in the optical channel}}{\text{Sum of all platelet particles in the optical channel}} \times 100\%$	%

4.4.5 Reticulocyte Parameters

Parameters	Name	Formula/Test Methods	Unit
RET%	Reticulocyte percentage	$RET\% = \frac{\text{Number of cells in the reticulocyte region}}{\text{Number of cells in mature RBC region + Number of cells in RET region}} \times 100\%$	%
RET#	Reticulocyte number	RET# = RBC x RET%	10^{12}/L
HFR	High fluorescent ratio	$HFR\% = \frac{\text{Number of cells in HFR region}}{\text{Number of cells in RET region}} \times 100\%$	%
MFR	*Middle fluorescent ratio	$MFR\% = \frac{\text{Number of cells in MFR region}}{\text{Number of cells in RET region}} \times 100\%$	%
LFR	*Low fluorescent ratio	$MFR\% = \frac{\text{Number of cells in MFR region}}{\text{Number of cells in RET region}} \times 100\%$ ***NOTE:*** Sum of all particles in the reticulocyte region = Sum of all particles in the LFR region + Sum of all particles in the MFR region + Sum of all particles in the HFR region	%
IRF	Immature Reticulocyte Fraction	IRF = MFR + HFR	%
RHE	Reticulocyte Hemoglobin Expression	Calculated based on the light scatter information of RET	pg

4.5 Wash

After each analysis cycle, all elements of the analyzer that the sample runs through are washed to ensure no residue is left.

5 Installing and Connecting the System

5.1 Notes for Analyzer Installation

⚠ **CAUTION**

- **The installation, authorization, upgrade and modification of the system software must be performed by personnel authorized by Mindary Animal Medical. Make sure to install only Mindary Animal Medical-authorized software.**
- **Unpacking, installation or transportation by personnel not authorized or trained by Mindary Animal Medical may cause personal injury or damage your instrument. Do not unpack, transport or install your instrument without the presence of Mindary Animal Medical-authorized personnel.**

NOTE:

- The safety of any system incorporating the equipment is the responsibility of the assembler of the system.
- The equipment is tested and packed with care before it is shipped from the factory. When you receive your analyzer, carefully inspect the carton. If you see any signs of mishandling or damage, contact Customer Service Department or your local distributor immediately.
- After you open the package, check the integrity of the product according to the packing list. If you find any part missing, contact your local distributor immediately.

5.1.1 Space Requirements

For the dimensions and weight of the analyzer, see “B.15 Dimensions and Weight”.

Check the site for proper space allocation. In addition to the space required for the system itself, arrange for:

- Proper height to place the analyzer;
- At least 500 mm on each side of the analyzer, which is the preferred access to perform service procedures;
- At least 600 mm above the analyzer;
- At least 250 mm behind the analyzer;
- The diluent container must be placed within 1.0 meter's reach under the main unit, the lyse container must be placed on a plane of the same level with the main unit.
- Desktop or platform must be capable to bear the weight of the analyzer.

5.1.2 Power Requirements

⚠ CAUTION

- **Using pinboard may bring electrical interference and the analysis results may be unreliable. Place the analyzer near the electrical outlet to avoid using the pinboard.**
- **Use the power cord provided by the manufacturer. Using the power cord other than provided by the manufacturer may lead to system damage or unqualified smear output.**

	Voltage	Frequency	Input power
Main Unit (Analyzer)	100–240V~ (±10%)	50Hz/60Hz (±1Hz)	300VA

5.1.3 Environment Requirements

	Normal Operation Environment	Storage and Transportation Environment	Operation Environment
Ambient temperature	10°C~30°C	-10°C ~ 40°C	10°C ~ 40°C
Relative Humidity	30% ~ 85%	10% ~ 90%	10% ~ 90%
Atmospheric Pressure	70.0 kPa ~ 106.0 kPa	50.0 kPa ~ 106.0 kPa	70.0 kPa ~ 106.0 kPa

NOTE:

The altitude requirement for normal operation: -400m ~ 3,000m.

- Install the instrument at a position not exposed to splashing water.
- The environment should be as free as possible from dust, mechanical vibrations, loud noises and electrical interference;
- It is advisable to evaluate the electromagnetic environment prior to operation of this analyzer.
- Do not use this instrument in close proximity to sources of strong electromagnetic radiation;
- Do not place the analyzer near brush-type motors, flickering fluorescent lights, and electrical contacts that regularly open and close;
- Do not place the analyzer in direct sunlight or in front of a source of heat or drafts;
- Do not use the instrument in a working environment with conductive or combustible gases.
- The environment shall be well ventilated;
- Do not place the analyzer on a slope;
- Connect only to a properly earth grounded outlet;
- Only use this analyzer indoors.

⚠ WARNING

- **When installing the system, ensure that the power switch is in close proximity to the equipment and within easy reach of you.**

5.1.4 Fuse Requirement

⚠ WARNING

The fuse used in the instrument is not a replaceable one. If there is any problem with the fuse, contact Customer Service Department or your local distributor.

5.1.5 Moving and Installing the Analyzer

Moving and installation of the analyzer shall be conducted by Mindary Animal Medical-authorized personnel. Do not move or install your analyzer without the presence of Mindary Animal Medical-authorized personnel.

5.2 Connecting the Analyzer System

5.2.1 Connecting the Reagents

⚠ CAUTION

When connecting the reagents, make sure the color of the reagent container cap assembly is the same as that of the reagent inlet to which it is connected.

Connect the reagent containers to the analyzer as shown in the following figure.

Figure 5-1 Reagent connection - connecting fluorescent dyes

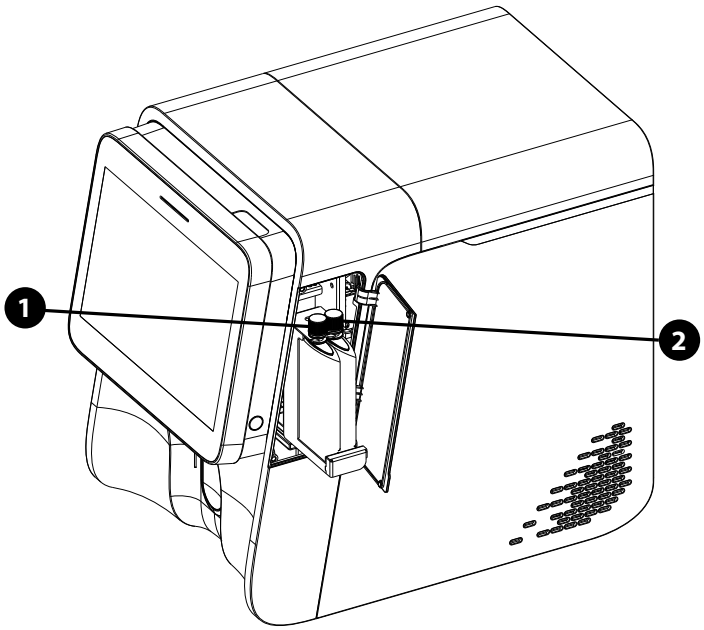

Interface No.	Type	Description
1	V-6 FD DYE	/
2	V-6 FR DYE	/

Figure 5-2 Connecting reagents - lyse, diluent, and waste

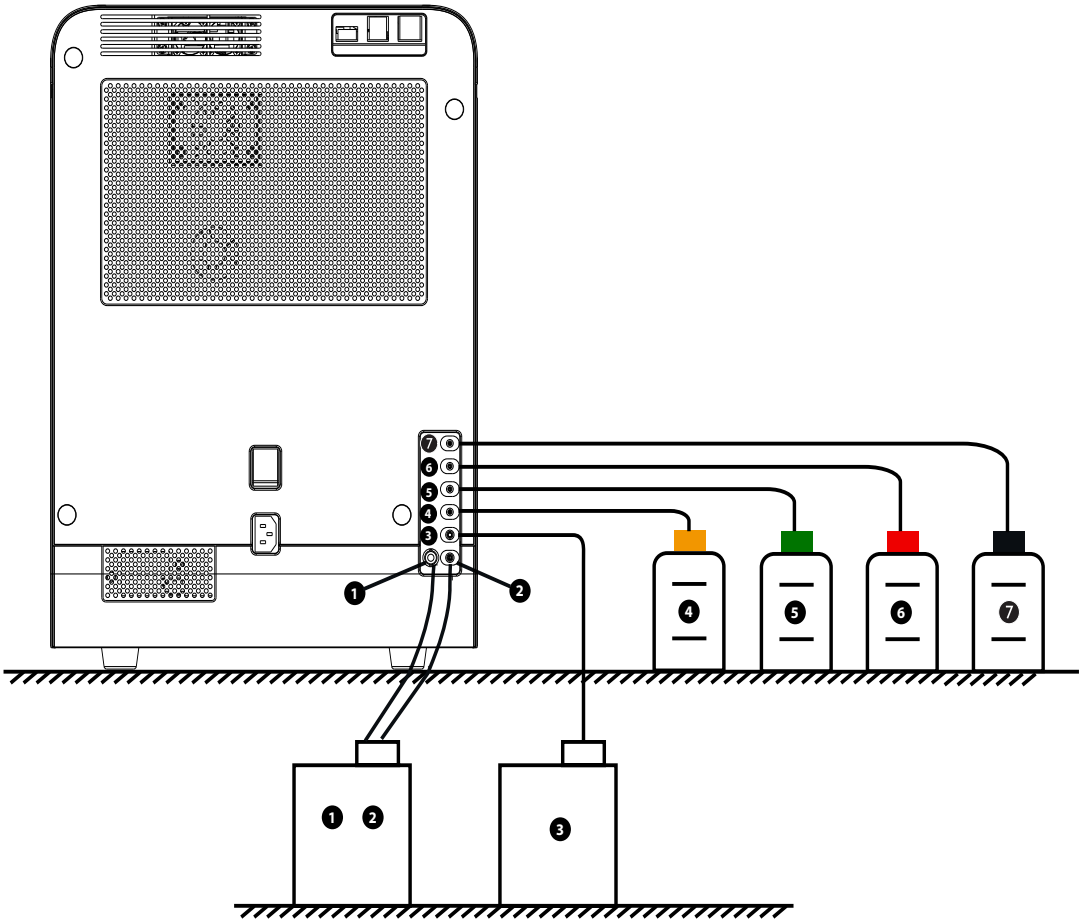

Interface No.	Type of Connected Reagent	Description
1 2	Waste container	Interface 2 is used to connect the waste container, and interface 1 connects to the waste floater sensor to detect whether the waste container is full
3	V-6 DS DILUENT	/
4	V-6 Solution Reagent	/
4	V-6 LH LYSE	/
6	V-6 LD LYSE	/
7	V-6 DR DILUENT	/

5.2.2 Connecting to the Peripherals

Make sure that the connections are correct and firm.

Figure 5-3 Connecting to the peripherals

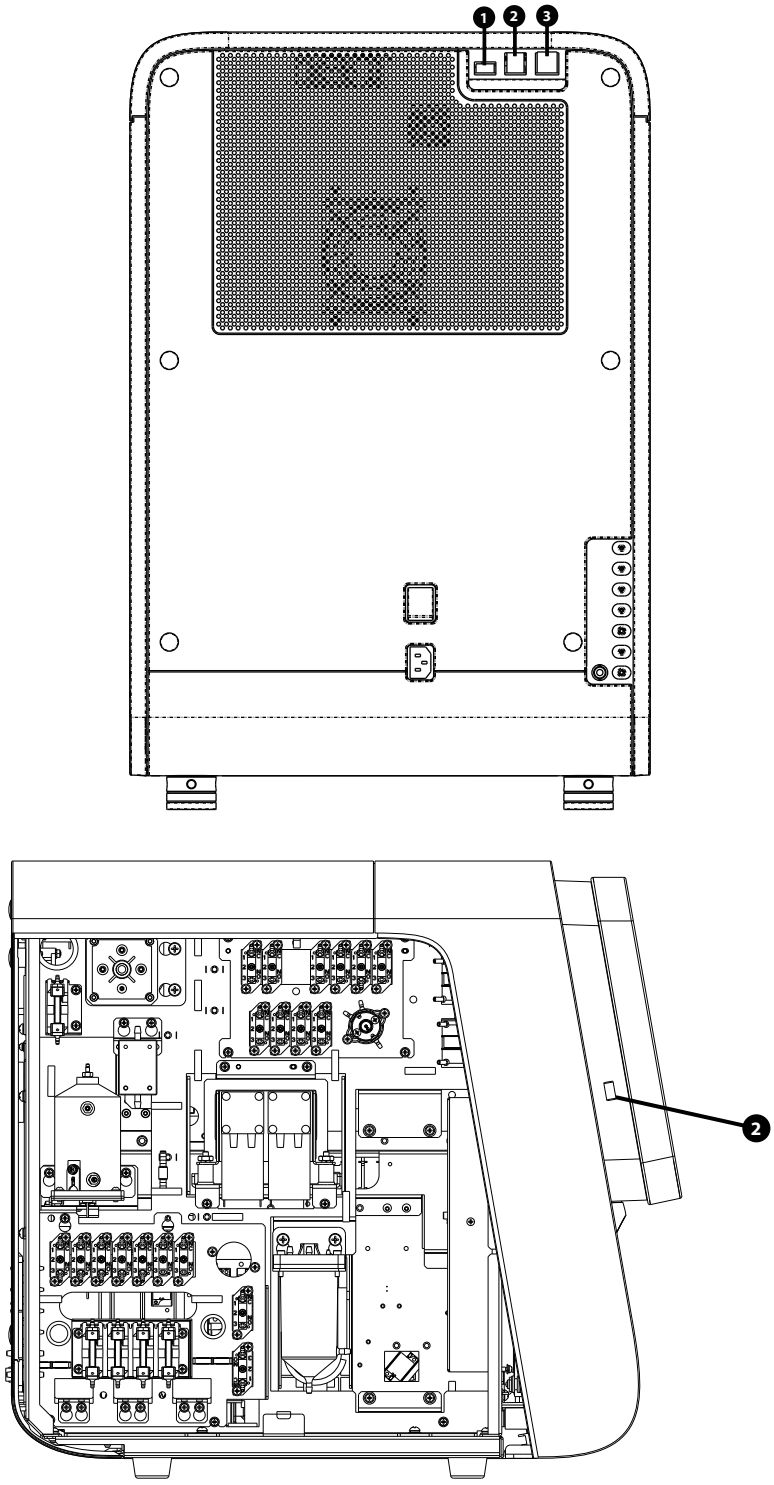

Interface No.	Interface	Connection
1	USB port	Supporting USB3.0
2	USB port	Supporting USB2.0
3	Network interface	Connecting to optional accessories (printers, scanners etc.) based on requirements.

⚠ CAUTION

Be sure to use the specified external devices only, and keep them away from water.

NOTE:

- The user should ensure the data safety of the USB devices connecting to the analyzer.
- When the analyzer connects to an external computer, install anti-virus software on the computer and scan for viruses and update patches periodically to prevent the analyzer from infecting computer virus. Do not use it for unintended

6 Customizing the Analyzer Software

6.1 Introduction

The analyzer is a flexible laboratory instrument that can be tailored to your work environment. You can customize the software options as introduced in this chapter.

For the security of the settings and data, two access levels are provided to the operator of the analyzer: "**General User**" and "**Administrator**". The administrator access level provides the operator with access to more functions or settings, some of which can be configured to be accessible to operators.

The following tables list the users' access by the access levels

Item		Administrator's Level	General User's Level
System Setup	**Print Setup**	√	Partly
	Communication	√	
	Date/Time Setup	√	√
	Lab Info. Setup	√	√
	Flag Alarm Sensitivity	√	
User Management	**Add User**	√	
	Delete User	√	
	Modify Password	√	√
Manage Animal Type	**Add Animal Type**	√	√
	Delete Animal Type	√	√

Item			Administrator's Level	General User's Level
Auxiliary Setup	**Get Sample Information**		√	√
	Other Settings	**Predilute mode prompt**	Review only	Review only
		Pop-up keyboard	√	√
		Enable fluorescent reagent detect sensor	√	√
		Enable waste direct discharge	√	√
		Monitor reagent expiration date	√	
		Flags	√	
		Alarm Volume	√	
Parameter Setting	**Parameter Unit Setup**		√	Review only
	Ref. Range Setup		√	Review only
	Microsco. Para. Setup		√	
Maintenance	/		√	
Reagent Setup	/		√	√
Gain Setup	/		√	
Auto Startup/ Shutdown	/		√	

6.2 Saving Settings after Changes

After you have changed or modified analyzer settings, follow below steps to save the changes.

1. Tap "**Menu** > **Setup**" and select the setting item you want to change.
2. Make necessary changes on the setting screen.
3. Tap another button on the software screen.

   A dialog box displays asking if you want to save the change.
4. Tap "**Yes**".

   The new setting is saved.

6.3 Analyzer Settings

6.3.1 System Setup

Print Setup ("Menu > Setup > System Setup > Print Setup")

Users can perform print setup in the "Print Setup" screen.

Follow below instructions:

1. Tap "**Menu** > **Setup** > **System Setup** > **Print Setup**" to enter the "**Print Setup**" screen.
2. Tap the "**Print Setup**", "**Printing Content**", and "**Auto print after sample analysis**" tabs as needed to perform print settings as needed.

   See below for setting descriptions

Item	Description	
Print device	Select a print device on the network from the pull-down list:	For questions about the print device and print drive settings, contact the customer service personnel of your print device supplier. (administrators)
Printer driver	Select a proper print drive from the pull-down list: • **Auto Identification** • **PCL6** • **Raster print**	
Paper	Select the desired paper type from the pull-down list: The analyzer supports the following paper types: • **A4**	/
Blood Sample Report Title	Enter the desired title in the edit box. The report titles set up here will display on the printed analysis reports.	/
Blood Sample Report Template	Select the desired template format from the pull-down list: • **One page with graph** • **One page without graph**	When "**One page with graph**" is selected, the print results include the parameter results and graphs. When "**One page without graph**" is selected, the print results include only the parameter results.
Para. Language	Select a parameter language from the pull-down list: • **English abbreviation**	When "**English abbreviation**" is selected, the printed report displays the English parameter names.
Copies	Enter the number of report copies to be printed when you tap "**Print**". The default value is 1 copy, and the setting range is [1 to 20].	/
Printing Content	Check the options you want to display on the printed report: • **Print flags of edited result** • **Print high/low result flags** • **Print suspect flags** • **Print flags** • **Print reference range** • **Monochrome Print**	For the description of setting up high/low results as well as suspect results flags, see "6.3.3 Auxiliary Setup" for other settings For the description of setting up reference ranges, see "6.3.4 Para. Setup (Administrators)"

Item	Description	
Auto print after sample analysis	Check to enable one or more desired auto print settings: • **Auto print after analysis** • **Auto print after validating** • **Auto print after QC count**	When "**Auto print after analysis**" is selected, the analyzer automatically print the sample results after each analysis. When "**Auto print after validating**" is selected, the analyzer automatically print the validated sample results. When "**Auto print after QC count**" is selected, the analyzer automatically print the results of QC count results after each QC count ends.

Communication ("Menu > Setup > System Setup > Communication") (Administrators)

Before you set up the communication settings, make sure that:

- you have logged in as an administrator.
- the network wire is firmly connected to the analyzer.

Administrators can configure the following communication settings

- **Network Device**
- **Protocol Setup**
- **Transmission Mode**

Table 6-1 Network Device

Item	Description
Network Type	**Wired**
	Wireless

Table 6-2 Protocol Setup

Item	Description	
IP Address	Enter the correct IP address	For correct network settings, consult Mindary Animal Medical Customer Service Department or your network administrator.
Subnet Mask	Enter the correct subnet mask	
Default Gateway	Enter the correct gateway	
ACK Synchronous Transmission	Check "**ACK Synchronous Transmission**" to enable the ACK synchronous transmission function.	When "**ACK Synchronous Transmission**" is enabled, enter the ACK overtime in the "**ACK Overtime**" field (10 seconds by default)

Table 6-3 Transmission Mode

Item	Description	
Transmission Mode	When you select LIS as a data channel, check to enable one or more transmission functions: • **Auto Retransmit** • **Auto Communicate** • **Transmit as Print Bitmap Data** • **Communicate QC results as sample result**	Only when "**ACK Synchronous Transmission**" is enabled, can you enable the "**Auto Retransmit**" function.
Data channel	Two data channels are available: • **LIS** • **vetXpert**	Operators with user level or administrator level accounts cannot change the setting
Scattergram transmitted as/ Histogram transmitted as	When you select LIS as a data channel, you can select the following options from the pull-down list: • **Not to be transmitted** • **Bitmap** • **Data**	/

Date/Time ("Menu > Setup > System Setup > Date/Time")

You can set up date and time on the "**Date/Time Setup**" screen.

Item	Description	
Date	Enter the current date	/
Time	Enter the current time	The analyzer uses the 24-hour clock system
Date Format	Select a date format from the pull-down list	/

Lab Info. Setup ("Menu > Setup > System Setup > Lab Info. Setup")

Users may enter necessary laboratory information on the "**Lab Info. Setup**" screen.

Flag alarm sensitivity ("Menu > Setup > System Setup > Flag Alarm Sensitivity") (administrators)

The analyzer provides the following flags for abnormal blood cell morphology.

Flag Message	Meaning	Condition
Immature Gran?	Possible presence of immature granulocytes	Presence of excessive dots in immature granulocyte sensitive region of the scattergram
RBC Lyse Resistance?	Possible presence of RBC lyse resistance	Presence of abnormally distributed dots in the WBC sensitive region of the DIFF scattergram

Flag Message	Meaning	Condition
Band cell suspected?	Possible presence of Band Cell	Presence of excessive dots in Band Cell sensitive region of the scattergram
Atypical Lymph?	Possible presence of atypical lymphocytes	Presence of excessive dots in atypical lymphocyte sensitive region of the scattergram
PLT Clump?	Possibility of PLT clump	Calculate and compare special parameters
Lipid Particles?	Possible presence of lipid particles	Presence of excessive dots in lipid particle sensitive region of the scattergram

During sample analysis, the analyzer evaluates and scores the possibility of the presence of all types of abnormal blood cell morphology. When the score for a certain type of abnormal blood cell morphology exceeds the set threshold, the analyzer reports the flag accordingly.

Administrators may tap "**Setup** > **System Setup** > **Flag Alarm Sensitivity**" to set up the flag alarm threshold values. The higher the threshold value, the lower the alarm sensitivity of the flag.

Define the flag alarm threshold values in the "**Value (0-100)**" edit boxes as needed.

NOTE:

- The allowed range for all flag alarm threshold values is [0-100].
- The flag alarm items vary with the models with different configurations. For details, see the screen of the model you purchase。
- The default thresholds for all flags are 40.

6.3.2 User Management

Tap "**Menu** > **Setup** > **User Management**" to enter the "**User Management**" screen. The "User Management" screen displays all the user accounts registered on the analyzer.

Adding new account

Administrators can create new users on the "**User Management**" screen.

1. Tap "**Menu** > **Setup** > **User Management**" to enter the "**User Management**" screen.
2. Tap "**New**" to go to the "**Add User**" screen.
3. Select "**Access Level**":
   a. **General User**
   b. **Administrator**
4. Enter the "**User ID**", "**Name**", and "**Password**" in turn.
5. Tap "**OK**" to save the settings.

   The new user account is activated.

NOTE:

- The user ID is required and up to 12 characters can be entered.
- The password is required and up to 12 characters can be entered.
- The name is required and up to 20 characters can be entered.

Changing password

NOTE:

Users at either administrator's or operator's level can only change the passwords for the users currently logged in.

1. Tap "**Menu** > **Setup** > **User Management**" to enter the "**User Management**" screen.
2. Select the current user, and tap "**Modify Password**".
3. In the "**Modify Password**" dialog box, enter "**Old Password**", and then enter the new password in the "**New Password**" and "**Confirm Password**" edit boxes.
4. Tap "**OK**" to save the new password.

   The new password is activated.

Deleting account

An administrator can delete any users registered under his/her own account.

NOTE:

You cannot delete a built-in user!

1. Tap "**Menu** > **Setup** > **User Management**" to enter the "**User Management**" screen.
2. Select a user and tap "**Delete**" to delete it.

   A confirmation box displays.
3. Tap "**Yes**".

   The selected user is deleted.

6.3.3 Auxiliary Setup

Tap "**Menu** > **Setup** > **Auxiliary Setup**" to enter the "**Auxiliary Setup**" screen. You can set up the following contents:

- **Get Sample Information**
- **Other Settings**

Getting sample information: Setting of the next sample

Tap "Menu > Setup > Auxiliary Setup > Get Sample Information" to enter the "Get Sample Information" screen. You can set the following options:

Item	Description
Entry of next sample ID	When "**Auto Increase**" is selected for "**Entry of next sample ID**", after you manually enter the first sample ID, the subsequent sample IDs of the same batch automatically increase
	When "**Manual entry**" is selected for "**Entry of next sample ID**", you need to enter each sample ID manually.

Item	Description
Prefix Length	When "**Auto Increase**" is selected for "**Entry of next sample ID**", this edit box is activated. Enter a number (n) into the edit box of "**Prefix Length**", the first n characters in the sample ID will not be auto increased

Getting sample information: Setting of the next sample after startup

In the area of "Setting of the first sample after startup", the following items are set as default:

Item	Default setting
First sample after startup	**Run the suspended sample after restart**
Mode	**CD**
Sample ID	**1**

Other settings

On the "**Other Settings**" screen, you can set the following functions:

- **Predilute mode prompt**
- **Pop-up keyboard**
- **Enable waste direct discharge**
- **Enable fluorescent reagent detect sensor**
- **Monitor reagent expiration date (**Administrators**)**
- **Flags** (Administrators)
- **Alarm Volume** (Administrators)

1. Tap "**Menu** > **Setup** > **Auxiliary Setup** > **Other Settings**" to enter the "**Other Settings**" screen.
2. Define the settings as needed.

Item	Description	
Predilute mode prompt	/	/
Pop-up keyboard	Check "**Pop-up keyboard**" to enable the pop-up keyboard. Tap on the edit area on each screen, the pop-up keyboard will display for you to input information. When you are using an external keyboard, you can uncheck "**Pop-up keyboard**" to disable the function.	/
Enable waste direct discharge	When "**Enable waste direct discharge**" is checked, a dialog box will pop up to remind you to make sure all tubes are properly connected.	/

Item	Description	
Enable fluorescent reagent detect sensor	When "**Enable fluorescent reagent detect sensor**" is checked, if the fluorescent reagents are not sufficient, the analyzer will send an alarm.	/
Monitor reagent expiration date	When "**Monitor reagent expiration date**" is checked, if the reagents expire, the analyzer will send an alarm.	/
Flags	Select from the pull down list to define the suspect, high and low flags (default: "R" for suspect, "H" for high and "L" for low).	Suspect: R, r
		High: H, h
		Low: L, l
Alarm Volume	Choose a proper alarm volume	Low, Medium, High, Max

6.3.4 Para. Setup (Administrators)

Parameter unit setup

Administrators may set up unit systems and parameter units.

1. Tap "**Menu** > **Setup** > **Para. Setup** > **Parameter Unit Setup**" to enter the "**Parameter Unit Setup**" screen.
2. (Optional) When necessary, select the unit system from the "**Unit System:**" pull-down list.
3. Tap the "**Unit**" column of the parameter for which you want to change the unit.

   The available units for the parameter displays on the right side of the screen.
4. Check the desired unit for the parameter in the "**Unit System:**" area.

   The parameter unit refreshes.

NOTE:

- Users at operator's level can only review the unit system and the parameter units.
- Tap "**Default**" to restore the default units for all parameters.

Ref. range setup

Users at administrator's level may select and customize reference ranges and reference groups.

1. Tap "**Menu** > **Setup** > **Ref. Range Setup**" to enter the "**Ref. Range Setup**" screen.
2. Add a new reference group, edit or delete reference groups, or set default groups as needed.

Follow below instructions:

Item	Description	
New	Tap "**New**" to add a new reference group. On the new reference group setup screen, set up the name, lower and upper limits of ages, as well as the gender information for the new "Reference group". When necessary, tap and edit the "**Upper**" and "**Lower**" limits for the parameters.	/
Edit	Tap to select the reference group to edit, and tap "**Edit**".	For the factory reference groups, can edit the "**Upper**" and "**Lower**" limits of the parameters. For the custom reference groups, you can edit the "**Upper**" and "**Lower**" limits of the parameters, and rename the custom reference group.
Delete	Tap to select the custom reference group to delete, and tap "**Delete**".	You cannot delete factory reference groups.
Default	Tap and select a reference group, and tap "**Default**" to set the selected reference group as default reference group.	/

Microscopic parameters setup (administrators)

In the default mode, the "**Microsco. Para. Setup**" screen displays microscopic parameters of hematology analysis.

Administrators may add new parameters, edit or delete existing microscopic parameters on the "Microscopic Para. Setup" screen.

1. Tap "**Menu** > **Setup** > **Para. Setup** > **Microsco. Para. Setup**" to enter the "**Microsco. Para. Setup**" screen.
2. Add new microscopic parameters, or edit or delete existing microscopic parameters as needed.

   Follow below instructions:

Item	Description
Add a new microscopic parameter	Tap "**New**" to add a row in the microscopic parameter name area. Enter the new parameter name in the "**Microscopic Parameter Name**" column.
Edit the microscopic parameters	Tap a parameter name in the table to edit the name.
Delete the microscopic parameters	Select a row in the table, and tap the "**Delete**" button to delete the parameter.

NOTE:

The analyzer can save at most 40 microscopic parameters.

6.3.5 Maintenance (Administrators)

Standby

When the time for which the analyzer is free from fluidic operations reaches that you have set on the “Maintenance” screen of the analyzer, the analyzer automatically enters the standby status.

On the “**Maintenance**” setup screen, administrators may set the wait time before the analyzer enters the “**Standby**” status, when the fluidic system stops working.

1. Tap “**Menu** > **Setup** > **Maintenance**” to enter the “**Maintenance**” screen.
2. Set up the wait time before the analyzer entering the standby status.

NOTE:

The allowed range is 30 to 60 minutes. Make sure you enter the valid time and in the required format.

Probe cleanser maintenance

Administrators may set up the start time for daily probe cleanser maintenance on the “**Maintenance**” setup screen.

1. Tap “**Menu** > **Setup** > **Maintenance**” to enter the “**Maintenance**” screen.
2. Set the start time and reminding interval for daily probe cleanser maintenance as needed.

   Set the start time of probe cleanser maintenance. The system will perform probe cleanser maintenance for the relevant parts at the specified time according to the operating condition of the analyzer.

NOTE:

The allowed range for the start time of probe cleanser maintenance is 00:00 to 23:59. The allowed range for reminding interval is 5 to 60 minutes. Make sure you enter the valid time and in the required format.

6.3.6 Reagent Setup

Tap “**Menu** > **Setup** > **Reagent Setup**” to enter the “**Reagent Setup**” screen. For the reagent replacing steps, see “12.3.2 Replacing the Reagents”.

6.3.7 Gain Setup (Administrators)

When the analyzer reports the HGB blank voltage abnormal error, and you cannot remove the error by pressing the “Remove Error” button, adjust the HGB gains to correct the HGB blank voltage.

1. Tap “**Menu** > **Setup** > **Gain Setup** > **WB**” to enter the “**Gain Setup**” screen of whole blood.
2. Adjust the HGB default gain in the “**HGB**” “**Set**” text box, until the HGB blank voltage is in the range of [4.30, 4.50].

NOTE:

When you modify the HGB default gain, the HGB blank voltage will change accordingly.

6.3.8 Setting Auto Startup/Shutdown Time (Administrators)

Administrators may set up the auto startup and shutdown time for the analyzer on the "**Auto Startup/Shutdown**" screen.

When you have set the auto startup/shutdown time, the analyzer automatically starts and shutdown at the set time.

1. Tap "**Menu** > **Setup** > **Auto Startup/Shutdown**" to enter the "**Auto Startup/Shutdown**" screen.
2. Check require dates.

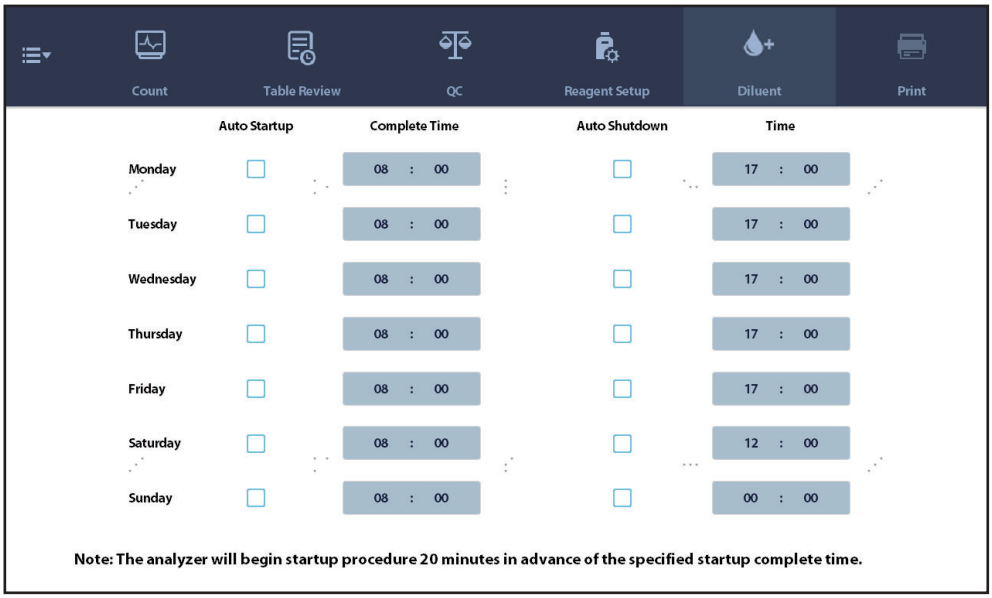

3. Define the auto startup complete time in the auto startup "**Complete Time**" field.

   For example, if you set the "**Complete Time**" for auto startup to 8:00 on Monday, the analyzer automatically starts the startup procedure at 7:40, and completes the procedure at 8:00.

4. Define the auto shutdown time in the auto shutdown "**Time**" field.

   For example, if you set the "Time" for auto shutdown to 17:00 on Monday, the analyzer automatically starts the shutdown procedure at 17:00.

NOTE:

To use the auto startup function, do not power off the analyzer.

7 Operating Your Analyzer

7.1 Overview

This chapter provides step-by-step procedures for operating your analyzer on a daily basis.

7.1.1 Operating Your Analyzer

A flow chart indicating the common daily operating process is presented below.

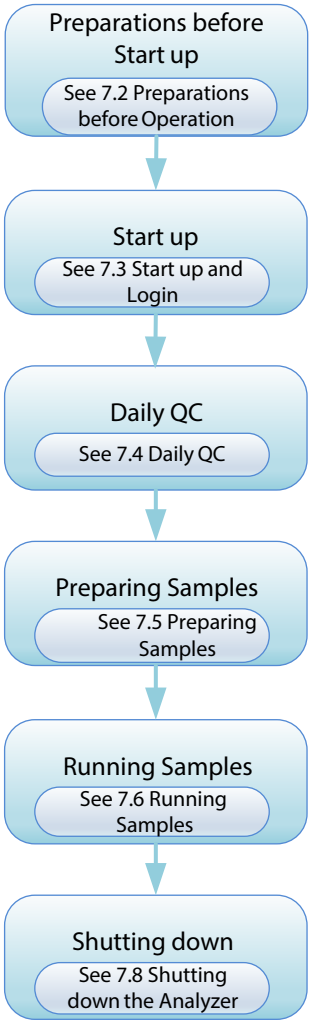

7.1.2 Introduction to the Software Screen

Introduction to the count screen

Figure 7-1 Count screen

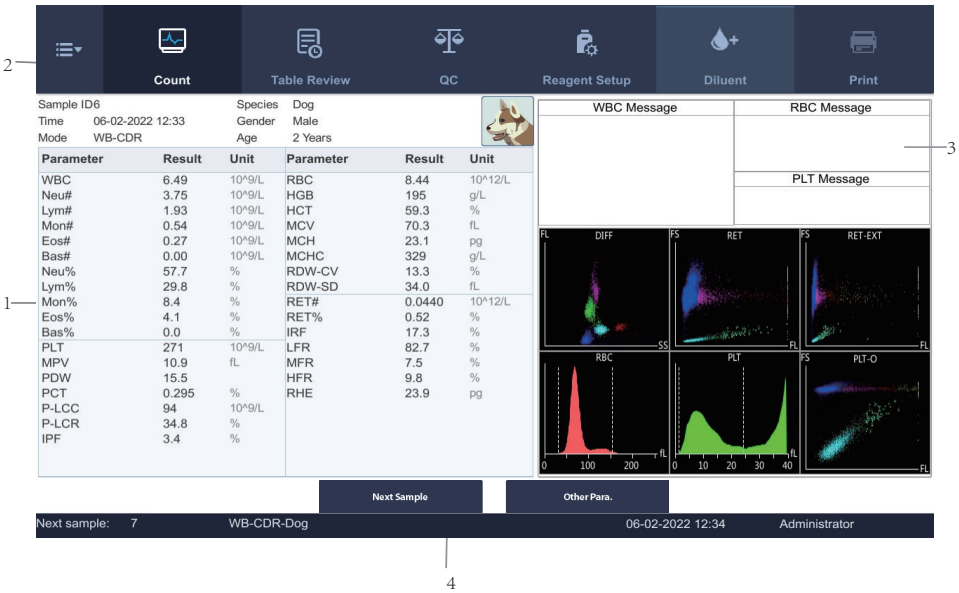

Item	Area	Description
1	Report parameter result area	The area displays the sample report parameter results.
2	Sample information area	The area displays sample information
3	Flags and graphs area	• View the abnormal blood cell differential or morphology flags for current sample • View the scattergrams and histograms for current samples
4	Button area	When sample analysis is completed, tap the "**Other parameters**" button to review the RUO parameters results of current sample, or review or edit microscopic parameter results (only for blood sample analysis).

Introduction to the test mode

Figure 7-2 Test mode

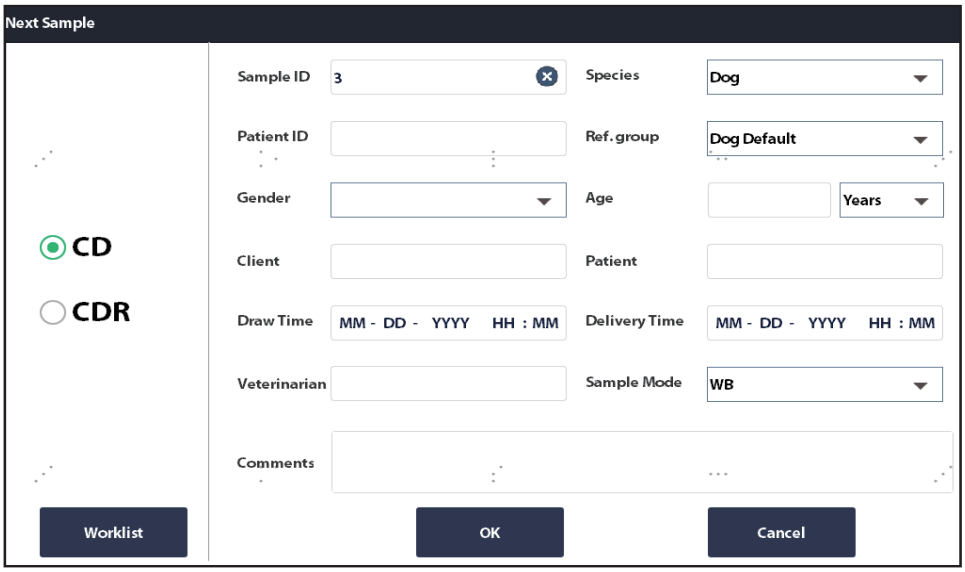

The analyzer supports two test modes: CD and CDR.

7.2 Preparations before Operation

⚠ CAUTION

Check if the reagent tubes are properly connected before using the system. Otherwise, the results may be inaccurate.

NOTE:

- Before using the analyzer, check and ensure that the analyzer is in normal operation status, that is, the indicator on the analyzer is in steady green; and no temperature alarm, liquid level alarm, or any other alarm is reported.
- When the ambient temperature is out of the specified operating range, the analyzer will alarm you for abnormal ambient temperature and the analysis results may be unreliable. Go to see “13 Troubleshooting”.

Perform the following checks before turning on the analyzer.

- Checking the waste container

  Provide a waste container, check and make sure the waste container is not full before startup. To replace the waste container, see “12.3.3 Replacing the Waste Container”.
- Checking the reagents
  - Check whether any reagent has expired and frozen. The reagent needs to be kept still for 24 hours after long-distance transportation.
  - Check whether there are enough reagents for the test of the day. If the reagents run out during analysis, the analyzer will pause working automatically and prompt the operator to

replace the reagents. Follow the instruction to replace the reagents. Otherwise you cannot continue the analysis.

For the safety precautions of reagents, see “1.2.3 Safety Messages Related to Reagents, Controls, and Calibrators”; for the use of reagents, controls, and calibrators, refer to the corresponding IFU; for how to connect and replace reagents, see “5.2.1 Connecting the Reagents”, see “12.3.2 Replacing the Reagents”.

- Checking for fluidic tubes and powers
  - Check and make sure the reagent and waste tubes are properly connected and not bent.
  - Check and make sure the power cord of the analyzer is properly plugged into the power outlet. For the power requirements, see “5.1.2 Power Requirements”.
- Checking the printer (optional)

  Check and make sure the printer is properly installed, and there is enough paper. Check whether the printer power cord is inserted into the power socket and whether the printer cable is connected properly.
- Checking the keyboard, mouse, and external computer (optional)
  - Check whether the network wire of the external computer is properly connected to the main unit.
  - Check whether the keyboard and the mouse cable are properly connected to the external computer.

7.3 Startup and Login

7.3.1 Starting up the Analyzer

⚠ WARNING

Before turning on the instrument, make sure the input voltage meets the requirements.

⚠ CAUTION

Please check the firmness of all the doors and covers before running the system, and make sure they will not open or get loose during analysis. Exercise caution when open/close, install/uninstall the doors and covers to avoid dropping to the ground.

Follow below instructions:

1. Change the power switch at the backside to ON position (“I”) to power on the analyzer.
2. The analyzer indicator lights up.
3. The analyzer performs self-test procedure and initialization.
4. When the self-test and initialization complete, the analyzer software displays the main screen.

NOTE:

- With the analyzer powers on, you can press [Standby] button on the right side of the analyzer to start the analyzer when the analyzer is shutdown.
- Time needed for initializing the fluidic systems depends on how the analyzer was previously shut down. Generally the startup process takes about 10 minutes.

- Users with different accounts have different access to software functions.
- If a fault occurs during initialization (for example, the background test result exceeds the acceptable range of background/blank count results, the analyzer will send an alarm. For the troubleshooting method, see “13 Troubleshooting”.
- Background test refers to test on particle and electrical interference.
- If the first background test result obtained during the fluidic initialization exceeds the background range, the analyzer will automatically perform background check again.
- The sample ID of the background test is “0”.
- The analyzer does not flag background test result with H/L or suspect flag.
- For the background range of each parameter, see “B.4.1 Background/Blank Count Requirements”.

The indicator status of the analyzer works as follows:

Indicator status	Meaning
Stay in green	Ready
Flicker in green	Running
Flicker fast	sample probe piercing
In red	Error
In orange	Standby
Off	Analyzer shutdown

7.3.2 Login

After the analyzer is started, the login screen appears. Users can enter account and password, and tap to enter the main screen.

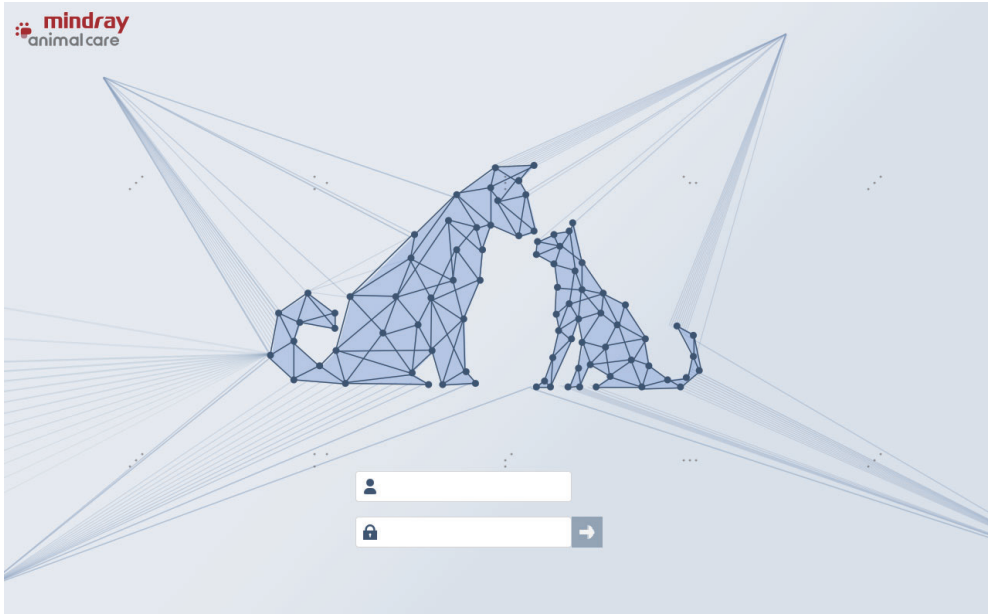

If the current user logs in as an administrator's account, the lower right corner of the screen displays "**Administrator**"

7.3.3 Switching Login Account

If necessary, perform the following steps to switch the login account. To set an account or change the password, see "6.3.2 User Management".

1. Tap "**Menu** > **Logout**" in turn.

   A dialog box displays

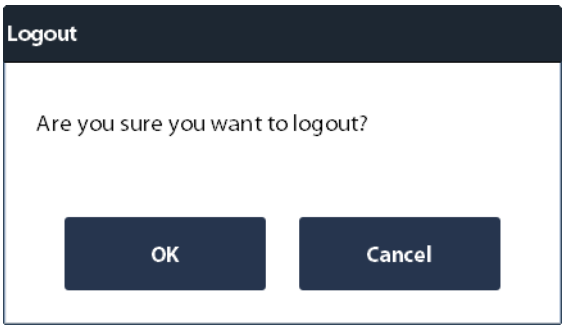

2. Tap "**OK**".
3. Enter the new user ID and password, and tap to log in.

7.4 Daily QC

Before running any samples, run the controls to ensure reliable results of the analyzer. Please see "9 Using the QC Program" for details.

7.5 Preparing Whole Blood Samples

⚠ CAUTION

- **Be sure to use the Mindary Animal Medical-specified disposable products like blood collection tubes. Do not reuse disposal products, otherwise the result may be inaccurate,**
- **To attain accurate analysis results, make sure the sample volume meets requirements. Otherwise, the results may be inaccurate.**
- **The samples stored under refrigeration condition (2°C to 8°C) must be kept at room temperature for at least 15 minutes before analysis.**
- **Be sure to mix any sample that has been prepared for a while before running it.**
- **Misleading results may occur if the sample has floccules, clots. Follow your laboratory protocol to deal with such samples.**

To attain accurate analysis results, make sure the venous blood sample volume meets the following requirements:

Table 7-1 Whole blood sample volume

Tube Position	Cap open?	Minimum Sample Volume
Under the sample probe	Yes	The minimum sample volume depends on the shape of the tube (Note: Make sure that the blood level is above the sample probe aspiration height).

1. Use evacuated blood collection tubes to collect venous blood samples.
2. Well mix the blood sample and EDTA K_2/EDTA K_3 anticoagulant in the test tube rapidly.

7.6 Sample Analysis

7.6.1 Setting up Sample Information

You can set sample information on the main unit of the analyzer.

1. In the "**Count**" screen, tap "**Next Sample**" to enter the "**Next Sample**" screen. Manually enter the Sample ID or use an external barcode scanner to scan the barcode label on the tube to enter the sample ID and sample information into the "**Sample Info.**" field.

   NOTE:

   - If you have set "**Entry of next sample ID**" to "**Auto Increase**", you only need to enter the sample ID for the first sample. The subsequent sample ID will automatically increase by 1 based on the previous one.
   - If you have set "**Entry of next sample ID**" to "**Manual Entry**", you need to enter the sample ID for each sample.
   - A maximum of 20 characters are allowed for an sample ID (including prefix); the ID must end with a number, and must not be consisted of "0" only.
   - For more information about the sample ID entry method, see "6.3.3 Auxiliary Setup".
2. Select the desired test panel.

Test Panel	Meaning	Description
CD	CBC+DIFF	Complete blood count + WBC differentiation tests
CDR	CBC+DIFF+Ret	Complete blood count + WBC differentiation tests + Reticulocyte-related tests

NOTE:

- The test panels vary with the models with different configurations. For details, refer to the configuration interface of your model.
- For the description of the test panels supported by the analyzer, see "3.4 Overview of Software Interfaces".

7.6.2 Performing Sample Analysis

⚠ CAUTION

- **When the power indicator is flickering, it indicates that the sample probe is lowering down. Be sure your hand is away from the sample probe during the process, otherwise, your hand may be hurt.**
- **During aspirating, the sample probe should touch the bottom of the container. Otherwise, the accuracy of aspirating volume will be affected.**

Check the following before analysis:

- Sample is prepared in accordance with the laboratory protocol (see "7.5 Preparing Whole Blood Samples").

- Analysis orders are set (see “7.6.1 Setting up Sample Information”).
- The entered sample ID, sampling mode, sample mode, and the test panel are strictly in accordance with the sample to be run.
- The analyzer is ready to run samples (i.e. the analyzer indicator stays in green). The sample probe lowers to aspiration position.

NOTE:

If you start sample analysis immediately after selecting test mode and species, the default reference range is set according to species. After the analysis finishes, the analyzer will flag results per the corresponding reference range.

Follow bellow instructions to analyze samples in whole blood mode:

1. Mix the sample.

Use a venous blood sample collected in an evacuated blood collection tube, shake the tube to mix the sample thoroughly.

2. Present the sample tube to the sample probe.

Use a venous blood sample collected in an evacuated blood collection tube, uncap the evacuated blood collection tube and present it to the sample probe, making sure the sample probe can aspirate the well-mixed sample.

3. Press the [Aspirate] key on the analyzer front cover again to start sample analysis.

The sample probe automatically aspirates sample.

4. Remove the sample tube.

– The analyzer automatically analyzes the sample, and the analyzer indicator is flickering in green.

– When the analysis completes, the analyzer indicator returns to “Ready” status (stay in green).

– The screen displays the current sample results, histograms, scattergrams and flags (if there is).

NOTE:

- If the analyzer detects clogging or bubbles during the analysis, the corresponding error message will be displayed in the error message area and the results of all related parameters will be invalidated. Go to see “13 Troubleshooting” for solutions.
- When the ambient temperature is out of the specified operating range, the analyzer will alarm you for abnormal ambient temperature and the analysis results may be unreliable. Go to see “13 Troubleshooting” for solutions.

7.7 Entering/Exiting Standby Status

When the analyzer is free from fluidic operations or when it reaches the set standby time, the analyzer automatically enters the standby status.

When the user starts sample tests, or performs any operation that initiates fluidic system actions or moving parts actions, the analyzer automatically exits standby.

NOTE:

Go to see “6.3.5 Maintenance (Administrators)” for how to edit waiting time before entering the standby mode.

7.8 Shutting down the Analyzer

⚠ CAUTION

- **Be sure to shut down the analyzer strictly as instructed. Otherwise, the tubes may be polluted, leading to wrong results.**
- **Do not start up the analyzer immediately after shutdown. Wait at least 10 seconds.**

Follow below instructions to perform the shutdown procedure.

1. On the “**Count**” screen, tap “**Menu** > **Shutdown**”.
2. Tap “**OK**” to perform the shutdown procedure. The dialog box disappears automatically.
3. When a dialog box pops up, asking you to perform Probe Cleanser maintenance, present Probe Cleanser to the sample probe as instructed, and start Probe Cleanser maintenance.

   NOTE:

   - When the instrument triggers the Probe Cleanser maintenance strategies, a Probe Cleanser maintenance dialog box will pop up when the instrument is shut down. The Probe Cleanser maintenance strategies include: Not perform daily maintenance (for 7 days by default) and accumulative analyzed samples greater than the threshold (500 by default). For modifying Probe Cleanser maintenance strategies, contact our Customer Service Department.
   - For how to perform probe cleanser maintenance, see “6.3.5 Maintenance (Administrators)”.
4. After Probe Cleanser maintenance is completed, the touch screen will blacks out and message will be displayed instructing you to power off the analyzer. Operate accordingly.
5. Check if the waste container is full. If yes, empty the waste container and dispose of the waste properly.

8 Reviewing Sample Results

8.1 Introduction

After every analysis cycle, the analyzer automatically saves the analysis results into the sample database.

Up to 40,000 analysis results can be stored in this analyzer. When the maximum number has been reached, the newest result will overwrite the oldest.You can review all the analysis results, scattergrams and histograms.

You can review all the analysis results, flags, scattergrams and histograms.

8.2 Reviewing Sample Results

NOTE:

The screenshots in this Operator's Manual are only for reference. The actual screens are subject to the configuration of your analyzer.

8.2.1 Entering the “Table Review” Screen

Select “**Menu** > **Table Review**” or tap the “**Table Review**” utility button to enter the “**Table Review**” screen.

The sample results are sequentially displayed from left to right on the “**Table Review**” screen, the latest on the utmost right of the table, including the sample information, parameter results, and animal information.

8.2.2 Operations on the “Table Review” Screen

Browsing sample record

Tap / , / , and / to turn to the left/right column (page).

Tap / , / , and / to turn to the previous/next row (page).

Figure 8-1 Table review - parameter result

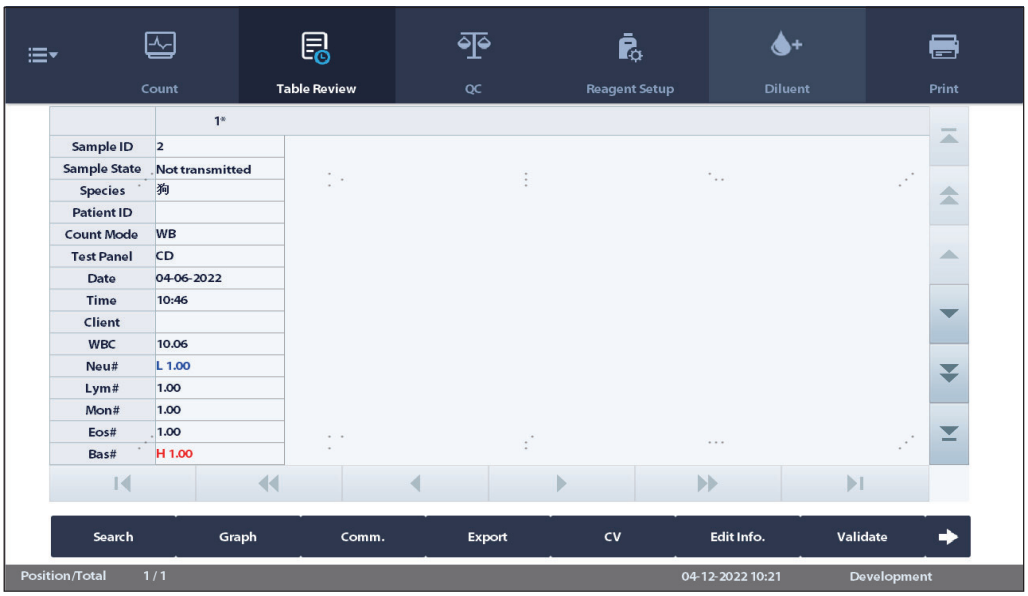

Figure 8-2 Table review - animal information

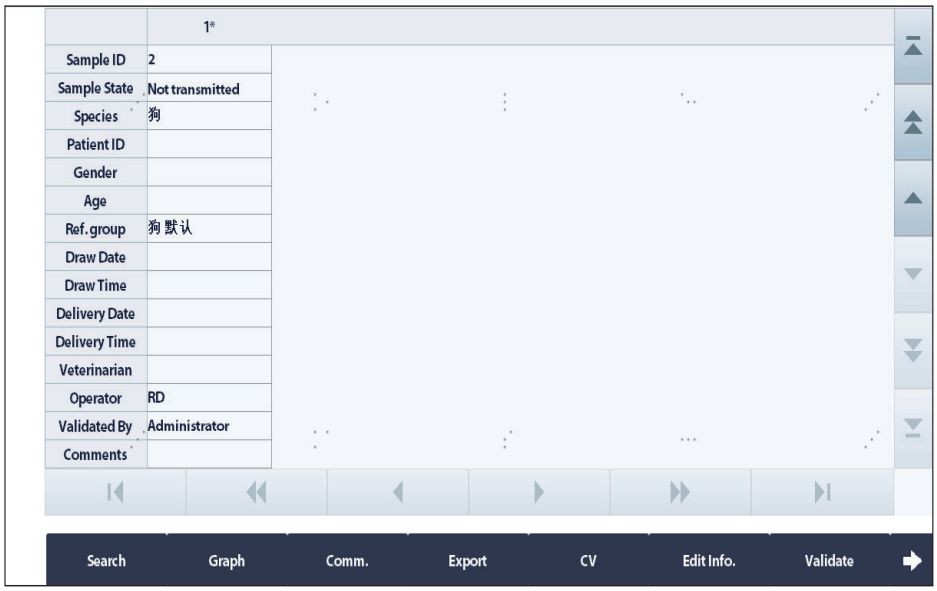

Tap / to switch to the second tool bar.

Figure 8-3 Tool bar

The position of the current sample result and the total sample results are shown in the form of "**Position/Total**" at the bottom left the screen.

Selecting/deselecting records

- Tap the record that you want to select to select it.
- Tap a selected record to deselect it.
- Tap the records that you want to select one by one to select multiple records.

  The selected sample records are highlighted.

8.2.3 Searching for Sample Records

You can search sample records that match defined conditions.

1. Select "**Menu** > **Table Review**" or tap the "**Table Review**" utility button to enter the "**Table Review**" screen.
2. Tap "**Search**" on the tool bar.

   The following dialog box displays.

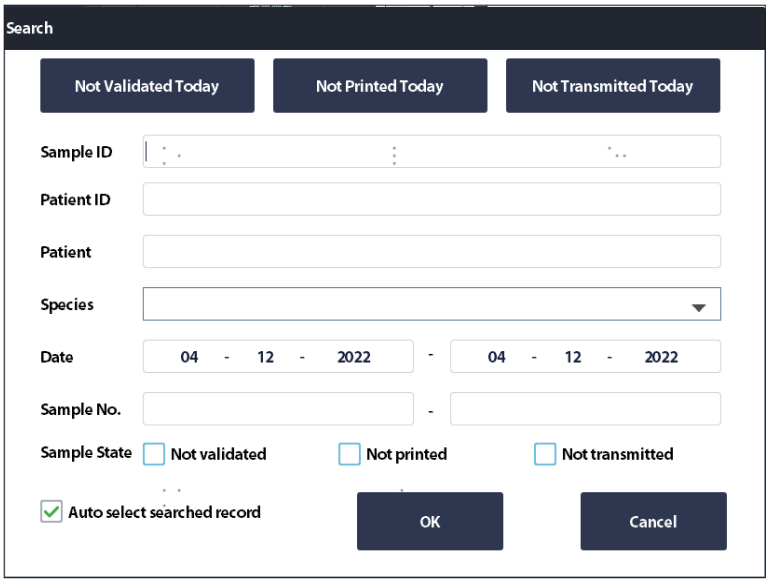

3. Define the searching conditions.

   Search today's samples by sample status, see below for setting descriptions:

Item	Description
Not Validated Today	Tap "**Not Validated Today**", "**Not Printed Today**", or "**Not Transmitted Today**" to search for the samples on the current day that are not validated, printed or transmitted.
Not Printed Today	
Not Transmitted Today	

Search for sample records that match defined conditions.

You can define one or more searching conditions. When you have defined more than one searching condition, the analyzer will search for the sample records that match all defined conditions.

Item	Description	
Sample ID	Enter "**Sample ID**" as a search condition, the analyzer searches for and displays all sample records whose sample ID includes the entered sample ID.	For example, if you enter "1235" into the "**Sample ID**" field, the analyzer will searches for all sample records whose sample ID includes "1235".
Patient ID	Enter "**Patient ID**" as a search condition, the analyzer searches for and displays all sample records whose patient ID includes the entered sample ID.	For example, if you enter "1235" into the "**Patient ID**" field, the analyzer will search for all sample records whose patient ID includes "1235".
Patient	Enter "**Patient**" as a search condition. The analyzer will search for all sample records whose patient name matches the defined patient.	/
Species	Enter "**Species**" as a search condition. The analyzer will search for all sample records whose species matches the defined species.	/
Date	Define the test time period in the "**Date**" fields as a search condition. The analyzer searches for all sample records tested between the defined time period of "**Date**".	The "**Date**" range is set to the current date by default.
Sample No.	Enter "**Sample No.**" as search condition, the analyzer searches for and displays all sample records whose sample ID includes the entered sample ID.	/
Sample State	Check "**Not validated**", "**Not printed**", or "**Not transmitted**", and the analyzer searches from all sample records that match the checked state.	You can check for more than one sample state, and the analyzer searches from all sample records that match the checked states.
"**Auto select searched record**" check box	When "**Auto select searched record**" is checked, the analyzer highlights and displays all searched results.	/

4. Tap "**OK**".

   All searched results display on the screen.

5. (Optional) Tap "**Cancel**" to return to the "**Table Review**" screen.

8.2.4 Graph Review

Follow below instructions:

1. Select "**Menu** > **Table Review**" or tap the "**Table Review**" utility button to enter the "**Table Review"** screen.
2. Select one or more sample records of which you want to review the graph data.

   The selected sample record is highlighted.
3. Tap "**Graph**" to go to the "**Graph**" screen.

   See below for relevant operations on the "**Graph**" screen:

Previous/Next

Tap "**Previous**" or "**Next**" to browse the previous or next samples.

Reviewing

Tap "**Table Review**" to enter the "**Table Review**" screen.

Other parameters

The "**Other parameters**" screen displays the RUO parameter results and microscopic parameter results.

1. Select "**Menu** > **Table Review**" or tap the "**Table Review**" utility button to enter the "**Table Review**" screen.
2. Select one or more sample records of which you want to review the RUO parameter results and microscopic parameter results.

   The selected sample record is highlighted.

   – Tap "**Graph**" to enter the "**Graph**" screen.

   – Tap "**Other Para**." to enter the "**Other Para**." screen.

Item	Description
Research Use Only (RUO) Parameters	Tap the "**RUO Para.**" tab to review the RUO parameter results. ***NOTE:*** RUO parameters are for research purpose only and they cannot be used for diagnosis purpose.
Microscopic parameters	Before you can review microscopic parameter results, make sure you have set the microscopic parameters on the "**Setup** > **Para. Setup** > **Microsco. Para. Setup**" screen. **1.** Tap the "**Microscopic Para.**" tab to review the "**Microscopic Para.**" results or tap the "**Result**" cell for a certain parameter to enter the microscopic parameter result. **2.** (Optional) Enter the blood group information and ESR result of the sample in the "**Blood Group**" and **"ESR**" edit boxes. **3.** (Optional) If necessary, tap the "**Print**" button on the "**Microscopic Para.**" screen to print the microscopic parameter results. ***NOTE:*** • For the method of defining microscopic parameters, see "6.3.4 Para. Setup (Administrators)". • You cannot edit the microscopic parameter results of a validated sample. For the method of validating samples, see "8.2.9 Validating/Canceling Validation (Administrators)".

Reviewing special information

Follow below instructions:

1. Select “**Menu** > **Table Review**” or tap the “**Table Review**” utility button to enter the “**Table Review**” screen.
2. Tap to select the samples of which you want to review the special information.

   The selected sample record is highlighted.
3. Tap “**Graph**” to enter the “**Graph**” screen.
4. Tap “Special Info.”.

   The screen displays the instrument-related information when analyzing the current sample.
5. (Optional) Tap the “**Error Information**” pull-down list to review the error logs (if there are) when analyzing the current sample.

Reviewing traceability information

The “**Traceability**” screen displays the information of the reagents and controls when analyzing the current sample.

Follow below instructions:

1. Select “**Menu** > **Table Review**” or tap the “**Table Review**” utility button to enter the “**Table Review**” screen.
2. Tap to select the samples of which you want to review the traceability information.

   The selected sample record is highlighted.
3. Tap “**Graph**” to enter the “**Graph**” screen.
4. Tap “**Traceability**”.

   The “**Traceability**” screen displays the information of the reagents and controls when analyzing the current sample.

8.2.5 Communication

Before transmitting the sample records, make sure the network connection is good.

Transmitting selected records

Follow below instructions:

1. Select samples to be transmitted on the “**Table Review**” screen.
2. Tap “**Comm.**” to display the “**Comm.**” dialog box.
3. Select the “**Selected records**” radio button.
4. Tap “**OK**” to start communication.

Transmitting all records

Follow below instructions:

1. Tap “**Comm.**”, the following dialog box displays.
2. Select the “**All records**” radio button.
3. Tap “**OK**” to close the dialog box and start transmitting data.

8.2.6 Exporting Sample Results

Users of administrator level can export the sample records, graphic data, flags, and other parameters of the selected sample records to a USB flash drive.

Before exporting sample records, make sure that you have inserted a safe USB flash drive into the USB port on the analyzer.

⚠ CAUTION

- **The USB port of the analyzer is only used to connect to a designated peripheral device. For details about supported devices and models, see "B.5 Input/Output Devices.".**
- **The user should ensure the data safety of the USB devices connecting to the analyzer.**

Exporting some or all sample records

Follow below instructions to export selected or all sample records:

1. Select "**Menu** > **Table Review**" or tap the "**Table Review**" utility button to enter the "**Table Review**" screen.
2. Tap to select one or more samples records that you want to export; to export all the sample records, go to the next step.
3. Tap "**Export**".

   The "**Export**" dialog box displays.
4. To export some sample records, tap "**Selected records**" in the "**Export Range**" area; to export all the sample records, tap "**All records**" in the "**Export Range**" area.
5. Tap "**OK**".

   The analyzer exports the corresponding sample records to the USB device.

8.2.7 Calculating CV Values

Follow bellow instructions to calculate the CV values of sample results:

1. Select "**Menu** > **Table Review**" or tap the "**Table Review**" utility button to enter the "**Table Review**" screen.
2. Tap to select multiple sample records for which you want to calculate the CV values.
3. Tap "**CV**".

   The screen displays the Mean value, SD value and the CV value for each parameter.

NOTE:

To calculate CV values, select at least 3 samples.

8.2.8 Editing Information

1. Select "**Menu** > **Table Review**" or tap the "**Table Review**" utility button to enter the "**Table Review**" screen.
2. Tap to select the sample records of which you want to edit the sample information.

   The selected sample record is highlighted.
3. Edit the sample information.

a. Tap "**Edit Info.**".

The following dialog box displays.

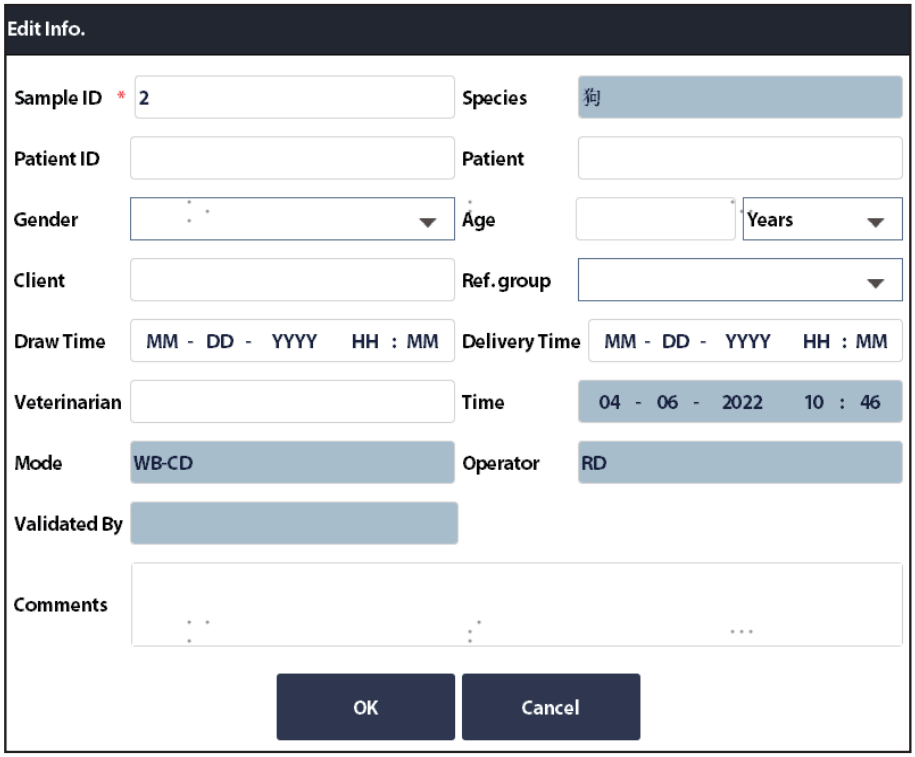

b. Enter necessary information as needed.

4. Tap "**OK**" to save the entered information.

NOTE:

For the setup of reference groups, see "6.3.4 Para. Setup (Administrators)".

8.2.9 Validating/Canceling Validation (Administrators)

NOTE:

You cannot validate background test results or invalid sample records.

Users of administrator level can validate/cancel validate sample records.

1. Tap "**Menu** > **Table Review**" or tap the "**Table Review**" utility button to enter the "**Table Review**" screen.
2. Tap to select the sample you want to validate or cancel validation.

   The selected sample record(s) is/are highlighted.
3. Tap "**Validate**" or "**Cancel Validate**".
   – For the validated sample records, the "**Validated By**" cell displays the role of the validator.
   – The "**Validated By**" cell for the unvalidated sample records will be empty.

8.2.10 Deleting Sample Records

Administrators can delete sample records on the "**Table Review**" screen.

Deleting some or all sample records

Follow instructions below to delete some or all sample records:

1. Select "**Menu** > **Table Review**" or tap the "**Table Review**" utility button to enter the "**Table Review**" screen.
2. To delete some sample records, tap to select one or more samples to delete; to delete all the sample records, go to the next step.

   The selected record(s) is/are highlighted.
3. Tap "**Delete**".

   The "**Delete**" dialog box is displayed.
4. To delete some selected sample records, tap to select "**Selected records**". To delete all the sample records, tap to select "**All records**".
5. Tap "**OK**".

   The system deletes the corresponding records.

8.3 Flags of Analysis Results

The analyzer provides two types of flags for analysis results:

- Parameter flags
- Flags of Abnormal Blood Cell Differential or Morphology

8.3.1 Parameter Flags

The analyzer provides the following parameter flags:

Flag	Message	Meaning
"H" (default) and "L" or "h" and "l" or "á" and "?"	High and low result flags	The analysis result exceeds the upper or lower limit of the reference range, but still within the display range
"R" (default) or "r"	Suspect flags	The analysis result is suspicious
"++++"	Out of display range flag	The analysis result is out of the display range
"****"	Screened results	When the system decides a parameter result is not reliable (for example, the DIFF parameter results of certain abnormal samples), the Sample Report screen will not display the results in values, but as "****".

NOTE:

The results of background check will not be flagged for abnormal parameters, abnormal blood cell differential or morphology.

8.3.2 Flags of Abnormal Blood Cell Differential or Morphology Results

⚠ CAUTION

Abnormal cells may not necessarily trigger the flags during the analysis process, it is recommended that reexamination is conducted per the operation instruction of your laboratory.

The analyzer reports the flags for the following abnormal blood cell differential or morphology.

Table 8-1 Trigger condition of Message parameter alarm (dog, cat, horse)

Message	Criteria
Leukopenia	WBC < 3 * 10^9/L
Leukocytosis	WBC # >20% above upper normal range limit
Neutropenia	Neutrophil # <20% below lower normal range limit
Neutrophilia	Neutrophil # >20% above upper normal range limit
Lymphopenia	Lymphocyte # <25% below lower normal range limit
Lymphocytosis	Lymphocyte # >25% above upper normal range limit
Monocytosis	Monocyte # > 40% above upper normal range limit
Eosinophilia	Eosinophil # > 40% above upper normal range limit
Basophilia	Basophil # > 100% above upper normal range limit
Anemia	HCT < 10% below lower normal range limit
Polycythemia	HCT > 10% above upper normal range limit
Microcytosis	MCV < 10% below lower normal range limit
Macrocytosis	MCV > 10% above upper normal range limit
Low MCHC Alert	MCHC < 10% below lower normal range limit
High MCHC Alert	MCHC > 10% above upper normal range limit
Thrombocytopenia	PLT # < 25% below lower normal range limit
Thrombocytosis	PLT # > 50% above upper normal range limit

Table 8-2 Trigger condition of other alarms

Message	Indication	Criteria
Aspiration Abn.	The sample probe is clogged or the sample volume is insufficient	Insufficient sample aspiration due to clogging of the sample probe, or insufficient sample volume

Table 8-2 Trigger condition of other alarms

Message	Indication	Criteria
WBC Abn Scattergram	DIFF scattergram abnormal	The DIFF channel scattergram is abnormal
Atypical Lympho?	Possible presence of abnormal lymphocytes	Presence of excessive dots in abnormal lymphocyte sensitive region of the scattergram
Immature Gran?	Possible presence of immature granulocytes	Presence of excessive dots in immature granulocyte sensitive region of the scattergram
Band Cell Suspected?	Possible presence of Band Cell	Presence of excessive dots in Band Cell sensitive region of the scattergram
Lipid Particles?	Possible presence of lipid particles	Presence of excessive dots in lipid particle sensitive region of the scattergram
NRBC?	Possible presence of nucleated red blood cells	Presence of excessive dots in NRBC sensitive region of the scattergram
RBC Abn Distribution	Abnormal distribution of RBC histogram	The distribution of RBC histogram is abnormal
Dimorphic Population	Dimorphic population distribution	Presence of two or more peaks on the RBC histogram
PLT Abn Scattergram	Abnormal distribution of PLT scattergram	The distribution of PLT scattergram is abnormal
PLT Clump?	Possibility of PLT clump	Calculate and compare special parameters

9 Using the QC Program

9.1 Overview

Quality Control (QC) consists of strategies and procedures that measure the precision and stability of the analyzer. The results imply the reliability of the sample results.

QC involves measuring materials with known, stable characteristics at frequent intervals. Analysis of the results with statistical methods allows the inference that sample results are reliable. Mindray Animal Medical recommends you run the QC program daily with normal, low and high level controls.

A new lot of controls should be analyzed in parallel with the current lot prior to their expiration dates.

This may be accomplished by running the new lot of controls for five days using any empty QC files. The QC files calculate the mean, standard deviation and coefficient of variation for each selected parameter. The instrument-calculated means of these ten runs should be within the expected ranges published by the manufacturer.

9.2 QC

On a QC graph, quality control data is plotted to show whether the instrument is working well.

Laboratories may set up allowable deviations (by standard deviations (SD) or coefficient of variation (CV%)) from the targets for the control based on their real scenario.QC points are then plotted so the operators may easily see how far the actual QC results are from their targets. The x-aixs indicates the QC date and time; and the Y-aixs indicates the targets as well as the defined limits. Draw a straight line respectively at the reference value position and the upper and lower deviation limit position of control parameter along the X-axis direction on the QC graph. Lines run across the graph at the target as well as at the upper and lower limits to either side of the target value for the control. The QC points' distance from the target value is measured in SD or CV%.

You can select one of the two ways below to run controls:

- Run controls under the “QC” screen.
- Put controls together with normal samples, and run the controls on the “**Count**” screen

9.2.1 Setting up QC Files (Administrators)

Introduction to the QC File Setup

You can set up QC files on the QC file setup screens.

Figure 9-4 QC file setup screen

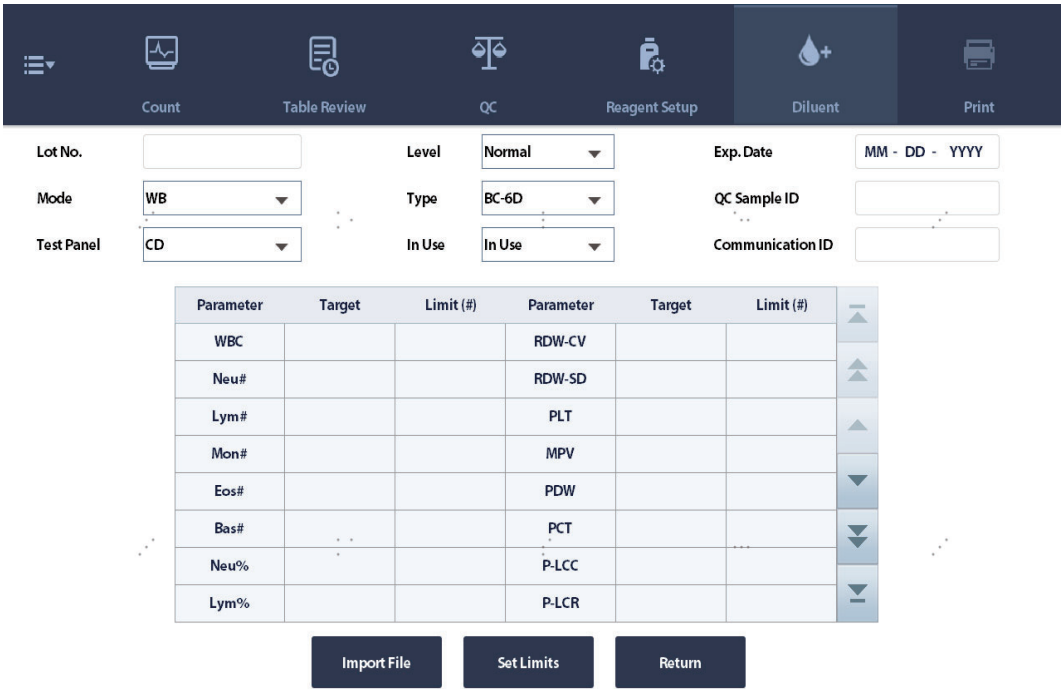

Table 9-3 QC file

Items	Description	Note
Lot No.	Find the Lot No. of controls on the vial labels of the controls	The lot No. shall not be empty and up to 16 digits can be entered. You can enter characters, numbers, letters and special characters. Chinese characters are not supported. The lot No. cannot be null. Enter the lot No. of the controls by one of the following ways: Manual entry, or using an external barcode scanner.
Level	Levels of controls “**High**”, “**Normal**”, “**Low**”	/
Exp. Date	Expiration dates of the controls	The expiration date shall not be earlier than the current system date.
Mode	The sampling and sample modes in QC tests: “**WB**”	/
Test Panel	The available test panel includes: **CD**, **CDR**	/
Type	The controls are classified into three types: “**BC-6D**”, “**BC-RET**” or “**BR60**”	/

Table 9-3 QC file

Items	Description	Note
In Use	QC files in use or not: **In Use** **Not in Use**	When you select "**In Use**" in the "**In Use**" pull down list, the QC results will be stored in the QC file.
QC Sample ID	If you analyze control together with samples, you can set a unique ID for the control. The analyzer will recognize the sample as control when it reads the unique ID. After the analysis completes, the results will be saved into the QC file of the QC sample ID.	You can enter letters, digits and all other characters on the keyboard (including special characters) for QC sample ID. Chinese and other languages are not supported (e.g. Japanese, Korean, etc.) If you are using external barcode scanner to scan sample IDs, make sure the QC sample IDs set on the QC file screen are the same as that of the Lot No. labels on the control vials. If you are manually entering sample IDs, make sure the QC sample IDs set on the QC file screen are the same as the sample IDs you entered on the "Mode" screen.
Communication ID	If you are using LIS, LIS identifies QC results by the communication ID set here.	/
Target	The target values for the QC parameters Find the targets in the target sheet of the controls	/
Limit	The allowed deviation limit for each QC parameter Find the limits information in the target sheet of the controls	The limits are represented by SD or by CV. Tap "**Set Limits**" and select to represent the deviations "**By SD**" or "**By CV**".

Setting up new QC file

Before running a new lot of controls, you must set up a QC file for each lot of controls.

1. Tap "**Menu** > **QC** > **Setup**" to enter the QC file setup screen.
2. Tap "**New**" to enter the new QC file screen.
3. Enter the necessary QC file information.

   You shall enter the required QC file information using one of the following ways:

   – Reading the information provided by the manufacturer

     Insert the USB device saving the QC files to the USB port on the analyzer.

     On the new QC file screen, tap "**Import File**" and follow the software instruction to import the QC file.

   – Manually enter the necessary QC file information.

   NOTE:

   - For the introduction of the QC file setup, see " You can set up QC files on the QC file setup screens.".

- The user should ensure the data safety of the USB devices connecting to the analyzer.

4. Define "**QC Sample ID**" and "**Communication ID**".
5. (Optional) If necessary, set the QC file to "**In Use**" in the "**In Use**" pull-down list.

   NOTE:

   - You can check or uncheck to "**In Use**" option on the QC file table screen to activate or deactivate the QC files.
   - For files having the same "QC Sample ID", only one of them can be "**In Use**".
   - For files having the same QC type and level, only one of them can be "**In Use**".
6. Save the QC file.
   a. Tap "**Return**" or other buttons on the screen.
      A confirm dialog box displays.
   b. Tap "**Yes**" to save the new QC file.

Editing QC files

You can only edit empty QC files.

NOTE:

You cannot edit the QC files that already have QC data.

1. Tap "**Menu** > **QC** > **Setup**" to enter the QC file setup screen.
2. Tap to select the QC file to edit.

   The "*" mark displays next to the "**File No.**" of the selected QC file.
3. Tap "**Edit**" to enter the QC file editing screen.
4. Edit the QC file as necessary.

   NOTE:

   For the introduction of the QC file setup, see "Table 9-3 QC file".
5. (Optional) If necessary, set the QC file to "**In Use**" in the "**In Use**" pull-down list.

   NOTE:

   - You can check or uncheck to "**In Use**" option on the QC file table screen to activate or deactivate the QC files.
   - For files having the same "QC Sample ID", only one of them can be "**In Use**".
   - For files having the same QC type and level, only one of them can be "**In Use**".
6. Save the QC file.
   a. Tap "**Return**" or other buttons on the screen.
      A confirm dialog box displays.
   b. Tap "**Yes**" to save the new QC file.

9.2.2 Running QC Tests

⚠ CAUTION

When the power indicator is flickering, it indicates that the sample probe is lowering down. Be sure your hand is away from the sample probe during the process, otherwise, your hand may be hurt.

You can select one of the two ways below to run controls:

- Run controls on the QC count screen.
- Put controls together with normal samples, and run the controls on the "**Count**" screen

Running controls on the QC count screen

⚠ CAUTION

Make sure the volume of the control meets the requirements. Otherwise, QC result maybe inaccurate.

NOTE:

- The expiration date of expired controls is displayed in red.
- Controls placed for a while need to be remixed before analysis.

Check the following before running QC analysis:

- Make sure you have set up a suitable and correct QC file for the control to be run, and the QC file is "**In Use**". (.)
- Make sure you have prepared the controls in accordance with your laboratory protocols, and the requirements in the Instruction for Use of the controls.
- Make sure the analysis system is without error.

After editing the QC information, you can start QC analysis by one of the following ways according to the selected QC mode: **WB**

Follow below instructions:

1. Tap "**Menu** > **QC** > **Count**" or directly tap "**QC**" to enter the QC count screen.
2. Select the "**File No.**" of the desired QC file from the "**File No.**" pull-down list.
3. Make sure the QC file information displayed on the screen is correct. Make sure the level of the control to be run is the same with the current QC file, and the control is not expired.
4. Prepare the control as instructed by instructions for use of the controls.

   NOTE:

   For instructions for reagents and controls, see "3.5.1 Reagents" and see "3.5.2 Controls and Calibrators".
5. To run QC counts:
   - **a.** Place the prepared controls under the sample probe.
   - **b.** Press the [Aspirate] key on the analyzer front cover again to start QC analysis.