S400 Quadcopter UAV

User Manual

V2.0

© 2022 GDU Copyright Reserved

Contents

User Instructions **3**

Warnings 3

GDU Flight II APP download 3

UAV legal registration 3

Product Overview **4**

Introduction 5

Function highlights 5

Preparation of the aircraft 6

Installation/removal of the gimbal camera 7

Installation of intelligent batteries/checking of battery levels 8

Aircraft parts 10

Remote controller parts 11

Aircraft **12**

Aircraft overview 13

Flight modes 15

Automatic return 16

Vision sensing system 20

Flight data 22

Propellers 22

Intelligent battery pack 23

Use **24**

Charging 24

Specifications **24**

Battery Pack LED Description **25**

Buzzer prompt tone description 25

Intelligent batteries 26

ADS-B 28

Multiple expansion devices 29

IP45 description 29

Remote Controller **30**

Remote controller overview 31

Preparation of the remote controller 31

Mobile device bracket installation 33

Remote controller pairing 33

Switching between remote controller flight modes 34

Control of the aircraft 35

© 2022 GDU Copyright Reserved

Control of the gimbal camera 37
Advanced network connection mode 38

GDU Flight Ⅱ App 41

Homepage 42
UAV status inspection 42
Manual flight 43
Map interface description 45
Description of setting interface 47
Advanced network connection function 47
Mission flight 48

Flight 51

Flight restriction functions 52
Flight environment requirements 52
Electric fence system 54
Pre-flight check 54
Magnetometer calibration 54
Takeoff/landing 55
Emergency propeller stopping 55
Basic flight 55

Appendix 56

Technical specifications 57
Firmware update 59
S400 payload compatibility table 60
Use the multi-payload module 61
A4G-400 network card package 63
Using the night navigation light component 64
Using the FPV component 65
Transportation box description 65

© 2022 GDU Copyright Reserved

User Instructions

Warnings

Thank you for using this GDU product. This product is a special electronic product. Improper operation may result in property damage, personal injury, or even death. The user will bear the legal consequences of these actions. This product must not be used by juveniles under the age of 18. In order to ensure a positive operating experience and to protect your personal safety, please carefully read the following documents before use:

Disclaimer and Safety Guidelines
Item List
User Manual
Quick Start Guide
Intelligent Battery Safety Guide
Routine Maintenance Manual

This document is subject to updates without notification. Please refer to the latest version at www.gdu-tech.com.

GDU Flight II APP download

Please download the GDU Flight II APP by logging on the official website at www.gdu-tech.com or by scanning the QR code below. Please use Android 7.0 or above to install the GDU Flight II App.

UAV legal registration

As per the Provisions on Real-time Registration Management of Civil Unmanned Aerial Vehicles of the Civil Aviation Administration of China, all UAV owners must register their real name and fill any related information at time of purchasing their UAV in the official government UAV registration system (http://uas.caac.gov.cn), and paste the registration mark on the hull of the UAV.

© 2022 GDU Copyright Reserved

Product Overview

This chapter mainly introduces the functional characteristics of the product, the guidelines for aircraft instruction, as well as the names of parts of the aircraft and the remote controller.

Introduction

The S400 is equipped with an advanced flight control algorithm, camera processing algorithm, gimbal stabilization algorithm, and visual AI algorithm. By integrating an omnidirectional obstacle avoidance system, high-precision RTK system, and visual positioning system, this product is capable of automatic patrol inspection, AI intelligent object recognition and tracking, automatic return, automatic precision landing, and other autonomous flight functions. In addition, visual assistance positioning, visual omnidirectional obstacle avoidance, and other functions ensure a safer and more stable flight of the UAV. The portable fuselage is easy to fold and carry. The maximum battery life is 63 minutes (1), and the flight control radius is 8km (2). As it can be used with different types of payloads, this product can meet the needs of different industries in complex applications and various scenarios.

(1) The maximum battery life of 63 minutes was measured in a breeze test environment when the aircraft was hovering without any load. The recommended economic cruising speed is 15m/s.
(2) The flight control radius of 15km was measured in an open and mutually-visible environment in a straight-line range test at an altitude of 200m

Function highlights

1. Relay network connection and cross-barrier communication: Use the relay to realize the cross-barrier communication and network connection where mountains are completely blocked.
2. Obstacle avoidance day and night with everything under control: Integrate millimeter-wave radar and binocular visual obstacle avoidance technology, enabling accurate sensing of obstacles at night.
3. 63-minute flight time and durable propulsion: High-efficient propulsion system in the UAV ensures a super-long flight.
4. 23m/s flight speed and robust flight: The maximum flight speed is 23m/s, and the wind resistance is up to Level 7.
5. Lightweight and portable One pack bag can accommodate all devices and tools with the overall size (folded) as small as a piece of A4 paper.
6. Multiple payloads and robust functions: The payload is 3kg . It supports dozens of payloads, including quad-sensor camera 1K thermal & visible dual camera, and 8K visible camera. (3)
7. Megapixel infrared light camera captures every detail: The megapixel thermal & visible dual camera has an effective pixel up to 1280×1024, which is 4 times of the highest pixel of infrared payloads on the market. It is capable of working day and night, and capturing every details of an object.
8. Intelligent docking station and unattended operation: When the UAV is used with the intelligent docking station, it is capable of accurate takeoff and landing day and night with non-stop and unattended operation.

(3)The payload is 3kg. The aircraft will restrict its flight speed to ensure flight safety.

© 2022 GDU Copyright Reserved

Preparation of the aircraft

Installation of the left and right landing gears

a) Insert the landing gear into the landing gear connection base.
b) Push the landing gear locking ring into the seat of the landing gear connection base indicated by the direction arrow, and rotate it based on the locking direction indicated on the fuselage.
c) Align the orange point on the landing gear to the orange point on the fuselage to complete the installation.

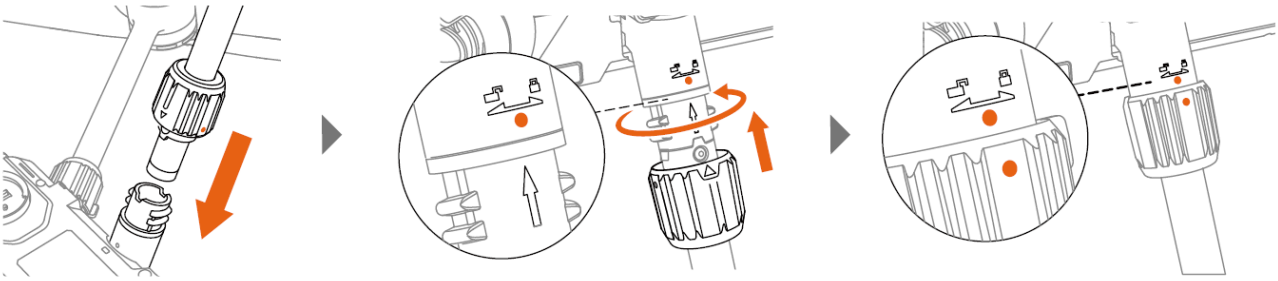

Unfolding and locking of the arms

a) Unfold the arms one by one.
b) Push the arm locking ring into the seat of the arm connection base indicated by the direction arrow, and rotate it based on the locking direction indicated on the arm.
c) Align the orange point on the arm to the orange point on the fuselage to complete the unfolding and locking of the arm.

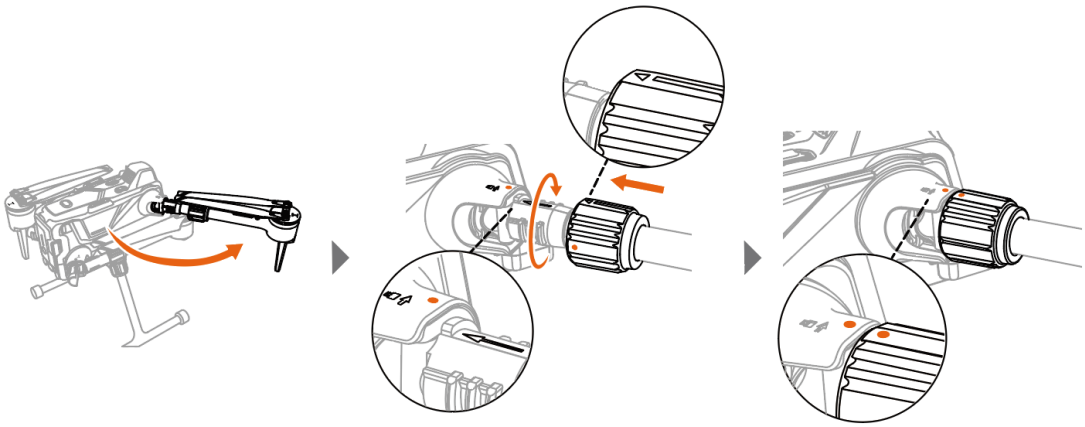

Unfolding of the propellers

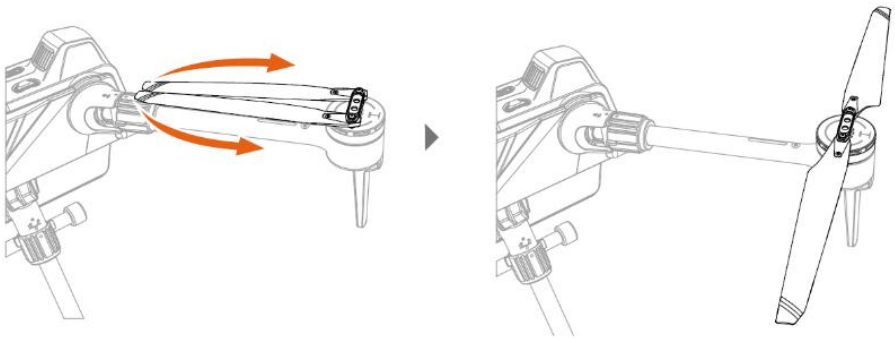

- Before a flight, make sure that the arms, propellers, and landing gears are all unfolded and locked in position properly.

Installation/removal of the gimbal camera

1. Insert the micro-SD card based on the position shown on the gimbal.

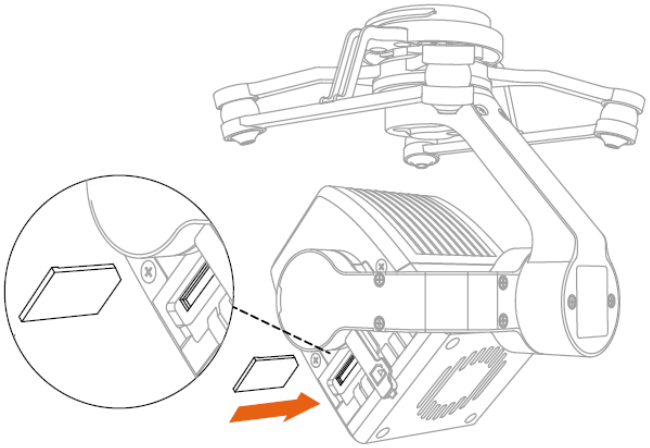

2. Press the payload unlocking button to remove the protective cover.
3. Align the red point on the payload interface and insert the gimbal into the installation position.
4. Rotate it by 90 °based on the direction shown on the casing to lock it.

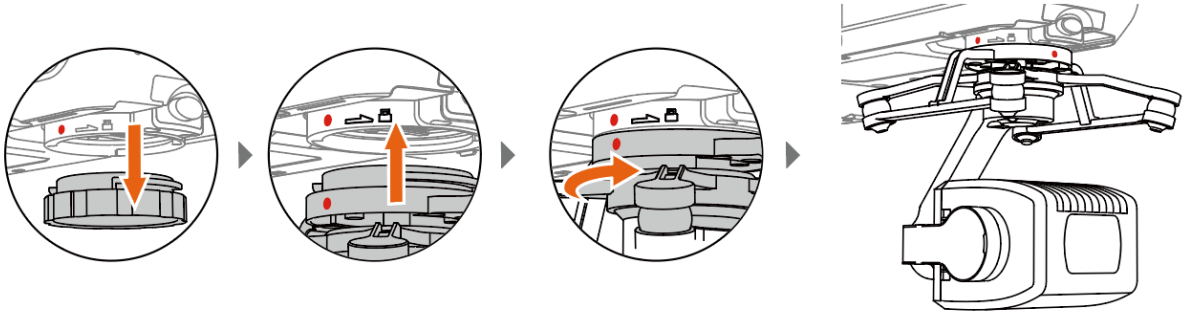

5. Press the payload mount adaptor button, and rotate the gimbal by 90 °based on the direction shown on the casing to remove it.

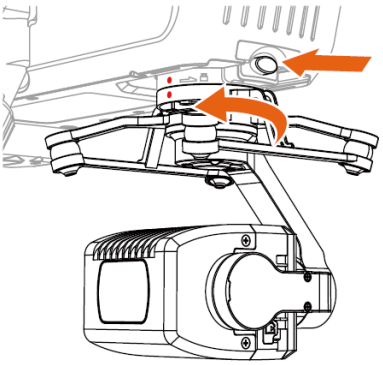

- When the payload mounts are aligned, manually rotate the payload interface connector by 90 ° and install the gimbal.
- The camera gimbal models shown in the figure are only for purposes of illustration.
- It is required that the aircraft be powered off before mounting the gimbal.
- Please power off the aircraft before inserting or removing a micro-SD card. High-speed micro-SD cards of Samsung, SanDisk and other brands are supported.

Installation of intelligent batteries/checking of battery levels

Battery installation/removal

Battery installation: Put the battery into the battery compartment and push it horizontally until you hear a “click” sound. The installation is complete when the latches on both sides of the battery snap up.

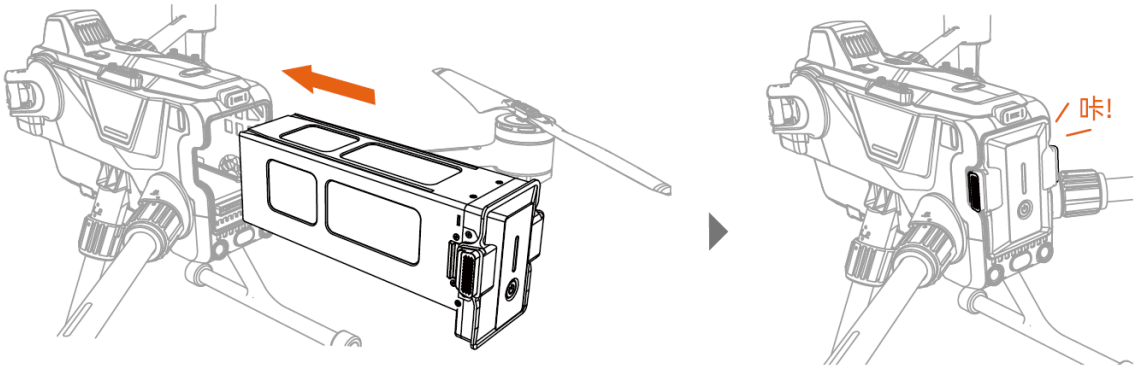

Battery removal: Press the latches on both sides of the battery and pull the battery outwards to remove it.

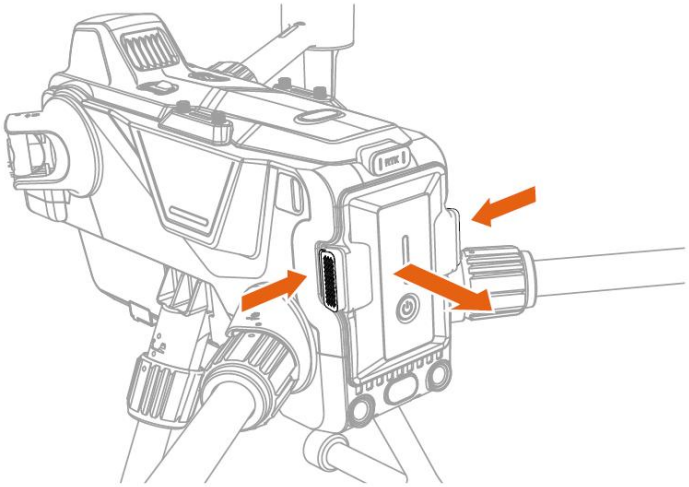

Checking battery levels: Press the battery power button once to display the current battery level.

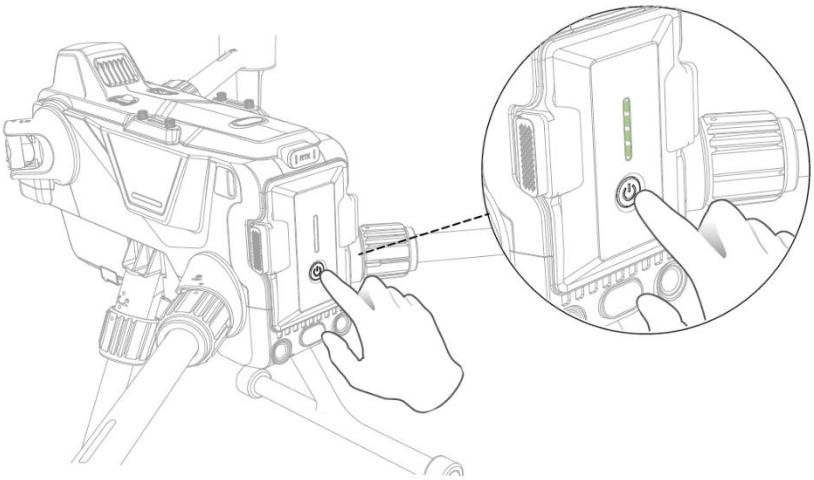

© 2022 GDU Copyright Reserved

Powering on

Powering on: Press the battery power button once, and press and hold the power button for 3 seconds. At this point, you will hear a beep sound, and the aircraft indicator light is up.
Powering off: Press the battery power button once, and press and hold the power button for 3 seconds to power off. After powering off, the aircraft indicator light is off.

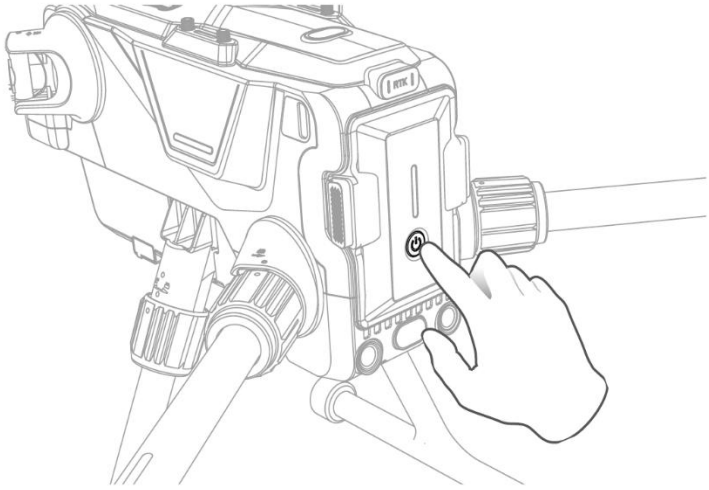

Pairing

When the aircraft is powered on, press the aircraft power button 8 times continuously. The aircraft will enter the pairing status, and the aircraft status indicator light is solid white. At this point, there are two pairing ways:

1. When the remote controller is powered off, press the power button and return button at the same time, until the remote controller indicator lights blink alternately. At this point, the remote controller enters the pairing status. After the pairing is successful, the aircraft indicator light is solid green, and the pairing completes.
2. After the aircraft enters the pairing mode, power on the remote controller and connect the same to the App. On the flight interface of the App, click “Settings” - “Remote Controller Settings” - “Remote Controller Pairing” to start pairing. After the pairing is successful, the aircraft indicator light is solid green.

When the remote controller and the aircraft are purchased in the form of combo, it is defaulted to be paired with the aircraft during ex-factory.

Aircraft parts

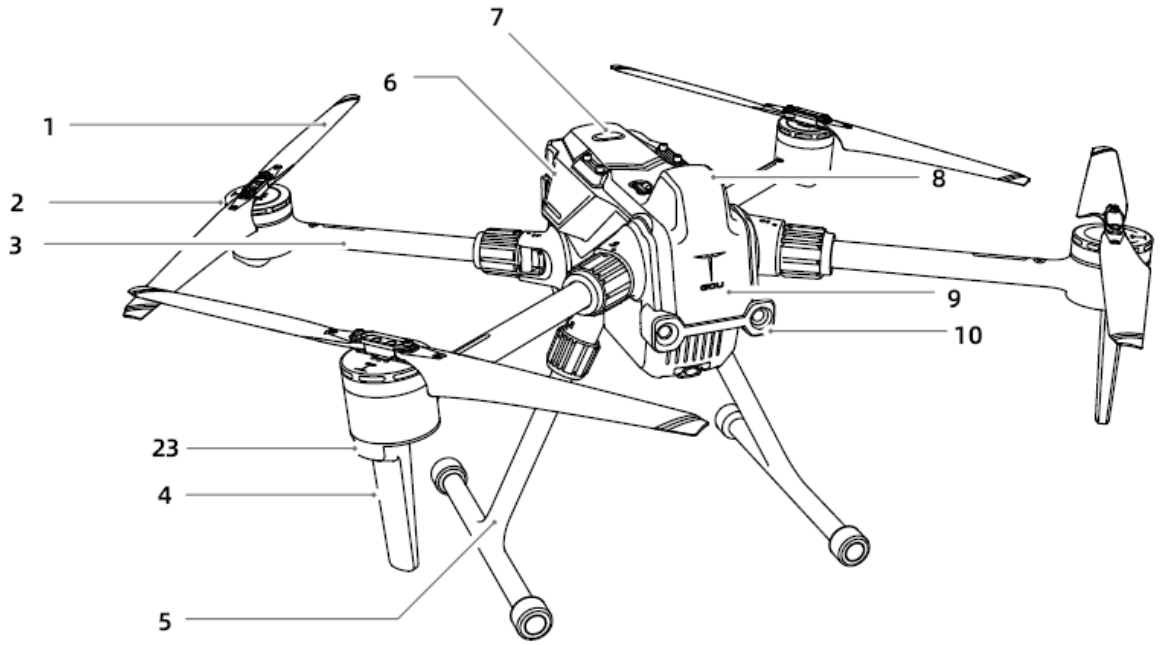

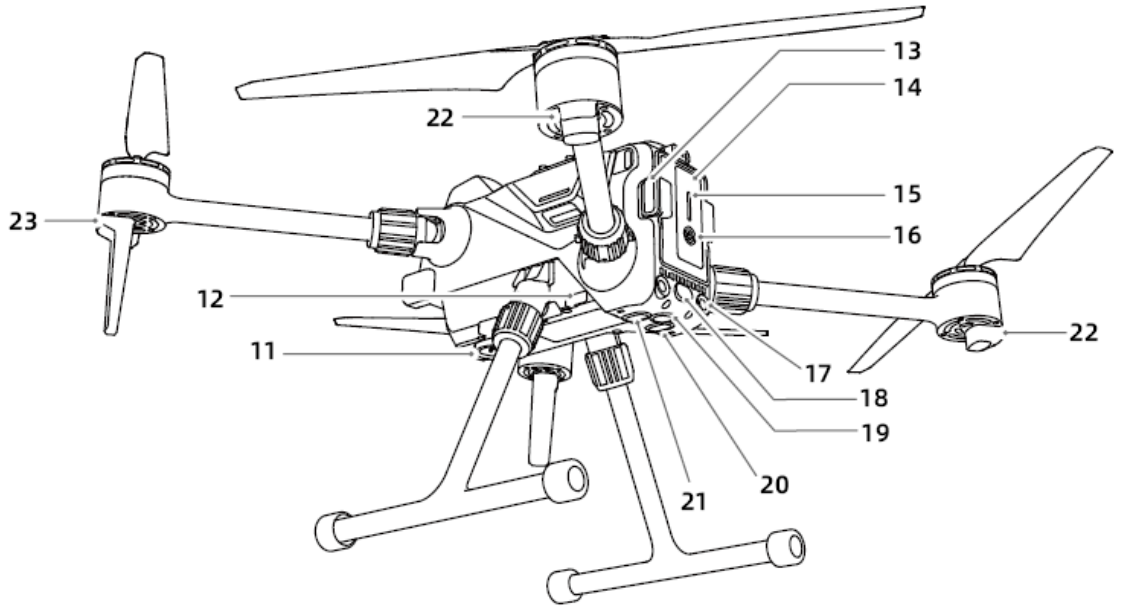

1	Propeller	9	Front radar	17	Rear visual system
2	Motor	10	Front visual system	18	Rear TOF
3	Arm	11	Payload interface	19	Bottom auxiliary light
4	Video transmission antenna	12	Video transmission master/slave button - debugging interface	20	Downward visual system
5	Landing gear	13	Battery buckle	21	Underneath TOF
6	Side radar	14	Intelligent batteries	22	Rear arm indicator light
7	Upward TOF	15	Battery level indicator light	23	Front arm indicator light
8	RTK antenna	16	Battery power button		

Remote controller parts

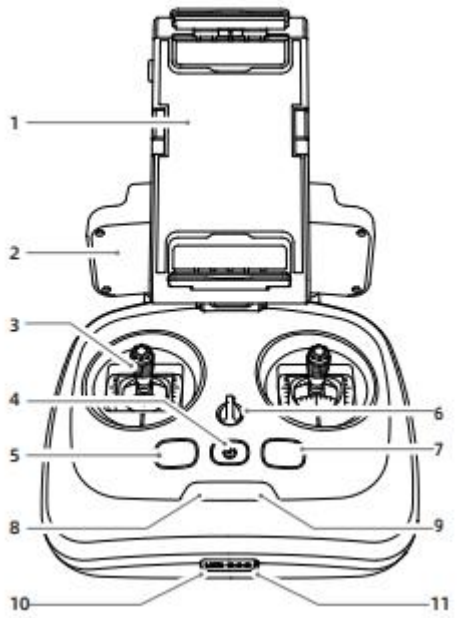

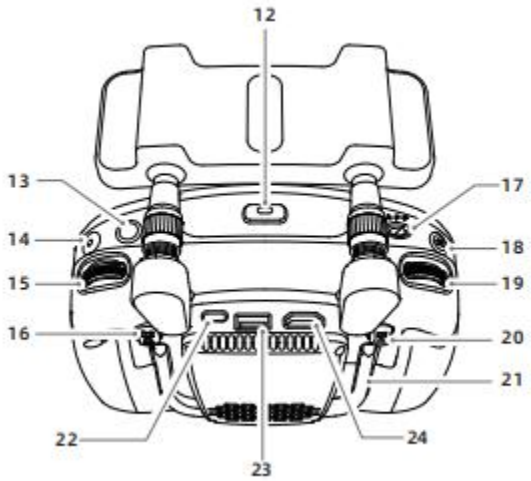

1	Mobile device support	14	Video button
2	Antenna	15	EV adjustment
3	Control stick	16	Customizable function button C2
4	Power button/remote controller battery level display One-button hovering button	17	Flight mode switch
6	Lanyard hole	18	Photograph button
7	RTH button	19	Camera pitch dial
8	Aircraft power indicator light	20	Customizable function button C1
9	Video transmission signal indicator light	21	Handle
10	Debugging interface	22	Type C port
11	Charging interface	23	Mobile output port
12	Mobile device support’s unlocking button	24	HDMI output port
13	Back-to-center button		

Aircraft

This chapter introduces various functional characteristics of the flight control system, visual system and intelligent battery in the aircraft.

Aircraft overview

The S400 aircraft mainly consists of a flight control system, a communication system, a visual system, an image processing system, a propulsion system and a battery system. This chapter introduces the functions of various components on the aircraft in detail.

Aircraft indicator light

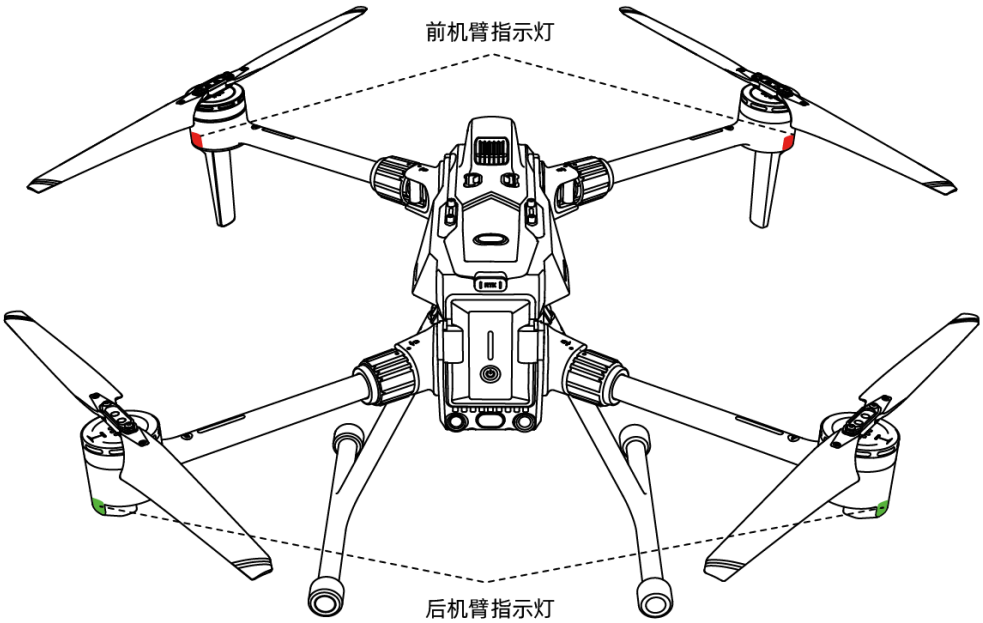

The fuselage has a total of 4 front and rear arm indicator lights, and their positions are shown in the figure.

The front and rear arm indicator lights indicate different flight status. For the specific meanings, please refer to the table below:

- The front arm indicator light is solid red, indicating the aircraft nose heading.

Normal status	Front arm indicator light	Rear arm indicator light
System self-check	Red, green, and blue indicator light are solid on in succession	Red, green, and blue indicator light are solid on in succession
Magnetometer horizontal calibration	Yellow indicator light is solid on	Yellow indicator light is solid on
Magnetometer vertical calibration	White indicator light is solid on	White indicator light is solid on
Algorithm converging	White indicator light blinks once for 0.5s	White indicator light blinks once for 0.5s
Return	Red indicator light is solid on	Green indicator light blinks once for 1s
Attitude mode	Red indicator light is solid on	Yellow indicator light is solid on
Sport mode	Red indicator light is solid on	Green indicator light blinks once for 1s
Standard mode	Red indicator light is solid on	Green indicator light is solid on
Power on the aircraft and connect to the remote controller	Red indicator light is solid on	Red indicator light blinks once for 1s
Pairing	White indicator light is solid	White indicator light is solid

	on	on
IMU calibration status ready	Indicator light is solid cyan	Indicator light is solid cyan

Warnings and errors	Front arm indicator light	Rear arm indicator light
Magnetometer horizontal calibration error	Yellow indicator light blinks once for 0.5s	Yellow indicator light blinks once for 0.5s
Magnetometer vertical calibration error	White indicator light blinks once for 0.5s	White indicator light blinks once for 0.5s
IMU1 error	Red indicator light blinks once for 0.2s	Red indicator light blinks once for 0.2s
Barometer error	Red indicator light blinks once for 0.2s	Red indicator light blinks once for 0.2s
Magnetic error	Red indicator light blinks once for 0.2s	Red indicator light blinks once for 0.2s
Emergency low battery alert	Red indicator light is solid on	Red indicator light blinks once for 0.2s
Low battery alert	Red indicator light is solid on	Red indicator light blinks once for 0.5s
Battery system error	Red indicator light is solid on	Red indicator light blinks once for 1s
In a no-fly zone or outside a electric fence	Red indicator light is solid on	Red indicator light blinks once for 0.5s
Approaching a no-fly zone or electric fence	Red indicator light is solid on	Yellow indicator light blinks once for 0.5s
Lost communication and no-error status	Red indicator light is solid on	Red indicator light is solid on

© 2022 GDU Copyright Reserved

Flight modes

The aircraft has the following flight modes, which can be switched manually through the remote controller and the GDU Flight II App. Details are as follows:

1. A mode (attitude)

The forward/backward obstacle sensing system, GNSS positioning and downward visual positioning system do not work; when the aircraft is off the navigation control, it will drift in the horizontal direction if the control stick is not pushed. It is required to use the control stick for real-time control.

2. P mode (standard)

If the GNSS signal is strong, the aircraft will be positioned through GNSS; if the GNSS signal is weak and the light conditions meet the needs of the intelligent visual positioning system, the intelligent visual positioning system will be used. If the GNSS signal and visual assistance positioning fail, the aircraft will automatically switch to the A mode to be controlled by a professional pilot.

3. F mode (sport)

The F mode is the enhanced mode under the P mode. The aircraft performance is enhanced, and the GPS and the downward vision positioning system is functioning. The aircraft's control sensitivity value is prompted, and the flight response is quick. Please fly with caution. In this mode, the obstacle avoidance system is disabled, and the aircraft is unable to avoid obstacles automatically.

4. T mode (tripod)

The tripod mode restricts the aircraft's maneuvering performance on the basis of P mode to make the aircraft shooting more stable.

5. V mode (vision)

The V mode refers to vision positioning mode. When the GNSS signal is weak, and aircraft altitude is lower than 9m, the system will automatically switch to the V mode. At this point, the aircraft's maximum speed is restricted to 10m/s.

A mode (attitude) description

1. The A mode is a professional mode. Please do not switch to this mode in non-special conditions.
2. When the GNSS satellite signal is weak or the compass is interfered, and the vision positioning conditions are not met, the aircraft will enter the attitude mode in a passive manner.
3. The user can use the flight mode switch button on the remote controller to manually switch to the A mode. In this mode, the aircraft is likely to be interfered, and will drift in the horizontal direction. In addition, the visual system and some intelligent flight modes will not work. Hence, the aircraft cannot achieve fixed-point hovering and automatic braking on its own in this mode. The user needs to manually control the remote controller to hover the aircraft.
4. In this mode, it is much more difficult to control the aircraft. The user must be familiar with the aircraft behavior in this mode and be capable of operating the aircraft skillfully. The user should never fly the aircraft for a long distance to avoid the loss of determination of the aircraft attitude, which may cause a risk.
5. Once the aircraft enters the attitude mode in a negative manner, please land the aircraft as soon as possible to a safe place so as to avoid accidents. Meanwhile, avoid flying the aircraft in a narrow, semi-obstructed environment, or an environment with weak GNSS satellite signals to avoid entering the attitude mode in a passive manner, which may result in flight accidents.
6. When the aircraft triggers the vision mode, it can only be switched to the A mode. The other modes do not work.

F mode (sport) description

1. The user must note that, when flying the aircraft in the F mode (sport), the visual obstacle avoidance will not work. The aircraft will not actively brake. The user must take note of surrounding environments and operate the aircraft to avoid obstacles along the flight route.

2. The user must note that, when flying the aircraft in the F mode (sport), the aircraft's flight speed is much increased than that in the P mode (standard). As such, the braking distance is greatly

increased. When flying the aircraft in a windless environment, the user should reserve at least 50m braking distance to ensure flight safety.
3. The user can switch the P mode to the F mode for operation only after getting familiar with the aircraft characteristics and various flight modes.

V mode (vision) description

The V mode is an auxiliary positioning mode and will be automatically triggered when the GNSS signal is weak. Once the GNSS signal is effective again, the aircraft will automatically switch back to the GNSS mode.

Automatic return

The aircraft comes with an automatic return function. There are four methods to execute the automatic return, that is “one-button return”, “low power return”, “lost communication return” and “accurate return”.

During takeoff, the aircraft will record the GNSS coordinates, which correspond to the return point (also called “HOME point”). If automatic return is triggered, the aircraft will automatically return to the HOME point, which is only valid for this flight.

- The HOME point is generated only for effective GNSS coordinate records. When the GNSS signal is weak before the aircraft takeoff, the aircraft will take off in the A mode or the V mode. Then, the position of the recorded HOME point is the coordinate point that takes effect for the first time during the flight process, and not the takeoff point.

1. One-button return

Automatic return can be triggered during the flight process by pressing the “Return” button on the remote controller or by clicking “ ” in the APP. During the return process, the user can use the “Control stick”, “RTH” button or the app interface to exit the return cycle and regain active control.

2. Low power return

Two mechanisms are provided: low power return and emergency low power landing.

Low power return

When the intelligent battery’s battery level is too low to return the aircraft,the user should land the aircraft as soon as possible. To prevent unnecessary dangers due to insufficient battery level, the aircraft will intelligently determine whether the current battery level is sufficient based on the flight position information. If the current battery level is only sufficient for the aircraft to return, the GDU Flight II App will remind the user whether to return or not. If the user makes no choice within 15 seconds, the aircraft will automatically return after 15 seconds. During return, the user may press the intelligent return button on the remote controller or click Cancel Return on the App to exit return. Intelligent return only occurs once in the same flight process. If the user cancels the low power return prompt and continues the flight, the aircraft may be forced to land during the return due to an insufficient battery level, resulting in aircraft loss or crash.

Emergency low power landing

In case of emergency low power, the aircraft will be forced to land, which cannot be canceled. During the returning and descending process, the user can use the remote controller (if the remote controller signal is normal) to control the aircraft.

Low battery alert

When the aircraft is at a low battery level status, the aircraft signal indicator light will blink red slowly. When the aircraft is at a emergency low power status, the aircraft signal indicator light will blink red quickly.

The low battery alert threshold can be set on the App interface. The ex-factory default low battery alert value is 20%, and the emergency low power landing alert value is 5%.

Emergency low power alert Low power alert Current battery level

Emergency low power landing Low power returnNormal battery level

Battery level indication	Meaning	Aircraft status indicator light	App interface prompt	Flight
Low power return	Remaining battery level is only sufficient for the aircraft to return safely.	Blink green slowly	Prompt whether to return or not. If the customer makes no choice, the aircraft will default to return after 15 seconds. The user can return the aircraft immediately or cancel the return.	After selection, the aircraft will automatically return to above the HOME point and enter an automatic landing process. The user can regain the control right during return, and land the aircraft. Notes: After the control right is regained, the intelligent return prompt box will not appear again.
Emergency low power landing	Remaining battery level is only sufficient for the aircraft to land at the current altitude.	Red light blinks quickly	Remind the user that the aircraft is being forced to land, which cannot be canceled.	The aircraft will land automatically.
Current battery level	Remaining flight time supported by the current battery level	None	None	None
Low battery alert	The user sets the alarm value on their own.	Red light blinks slowly	Give a beep alarm.	None
Emergency low battery alert	The user can automatically set the alarm value, which should not be greater than the low battery alert value.	Red light blinks quickly	Give urgent beep alarms.	None

3. Lost communication return

During the flight process, if the remote controller is disconnected from the aircraft, the aircraft will trigger a lost communication return (It is required to set the lost communication action to return in the App). During the return process, if the signal connection between the remote controller and the aircraft restores to normal, the aircraft will continue to return. During the return process, the user can press the intelligent return button on the remote controller or click Cancel Return on the App interface to cancel the return.

4. Accurate return

In the App, the user can set the return mode to accurate return. In this mode, the aircraft will accurately land after returning to the HOME point. The user should ensure that when the return mode is selected or modified, there is an accurate landing 2D code at the HOME point.

Obstacle avoidance during return

With the obstacle avoidance during return, the aircraft can automatically avoid the obstacles ahead and return safely. By default, the obstacle avoidance during return is enabled.

- The obstacle avoidance capacity during return is related to the obstacle scenario. The obstacle avoidance capacity varies in different scenarios. The return speed can be set between 5m/s and 15m/s.
- The return speed can be set to 15m/s when the aircraft flies above highly-reflective objects, such as buildings, and metal pole tower.
  The return speed can be set to 12m/s for slightly weak reflective objects, such as glass buildings, trees, and telegraph poles.
  The return speed can be set to 7m/s in forests, brushes, and other scenarios with a large area of green plants.
  The return speed can be set to 5m/s in sparse vertical bars of obstacles, such as reinforcing steel bars in buildings under construction and sparse tress.
  The obstacle avoidance capacity during return will be sharply weakened at night. It is recommended to set the return speed to 5m/s at night.

Automatic return process

1) The aircraft records the HOME point.
2) Trigger automatic return conditions (by pressing the remote controller button trigger, or by a low power alert and lost communication).
3) The aircraft confirms the HOME point, and automatically adjusts the nose direction.
   a) When the horizontal distance between the aircraft and the HOME point is greater than 20m, and the actual altitude is higher than the pre-set return altitude, the aircraft will return at the current altitude; and if the actual altitude is lower than the pre-set return altitude, the aircraft will ascend to the return altitude before returning.
   b) When the horizontal distance between the aircraft and the HOME point is greater than 5m and less than 20m, and the actual altitude is higher than the pre-set return altitude, or the actual altitude is lower than the pre-set return altitude but greater than 20m, the aircraft will return at the current altitude; and when the aircraft altitude is less than 20m, the aircraft will ascend to 20m before returning.
   c) When the horizontal distance between the aircraft and the HOME point is less than 5m, click the return button to immediately land the aircraft in place, and the one-button landing can be interrupted.

The text below uses the intelligent return process as an example for illustration.

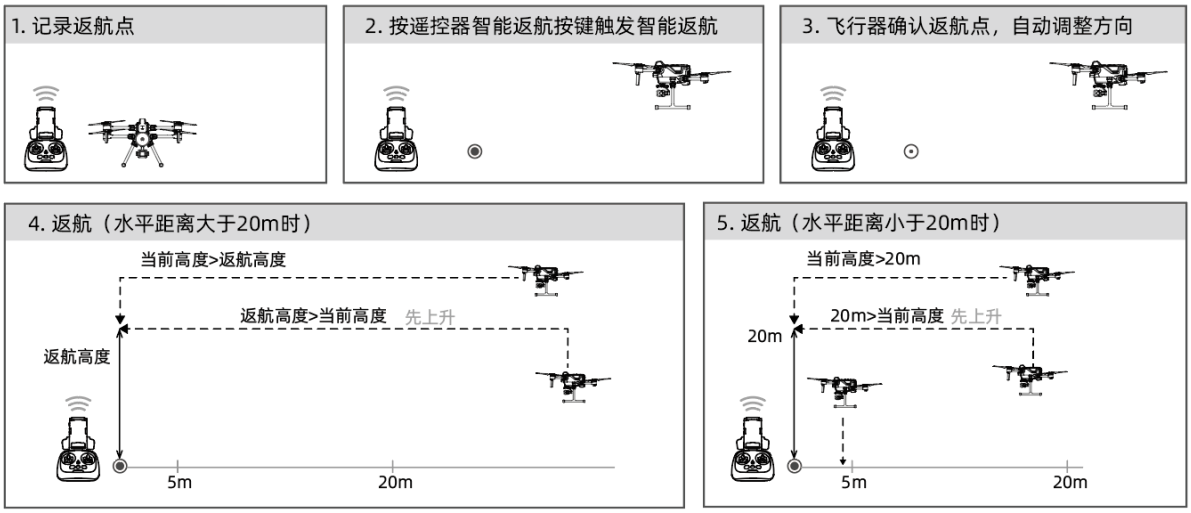

- When the aircraft takes off in the A mode or the V mode, the HOME point will not be recorded.
- The user can toggle the control stick during the descending process to move the aircraft to a more appropriate position before landing.
- The color range on the battery energy tank and the estimated remaining flight time information will be dynamically adjusted based on the aircraft’s flight altitude and the distance to the HOME point.

Vision sensing system

Visual system, millimeter-wave radar and infrared sensing system

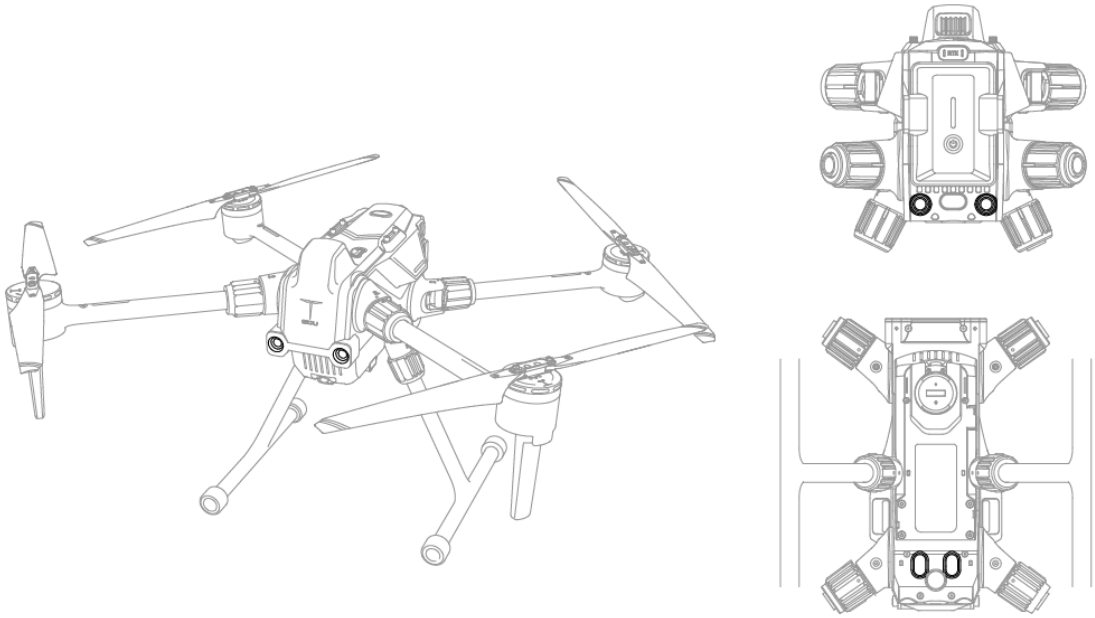

The vision sensing system consists of cameras which are located in the front, rear, and bottom of the aircraft fuselage, and are used for sensing the obstacles and position the aircraft through visual image ranging.
The millimeter-wave radars are located at the front, left, and right side of the aircraft fuselage and emit section electromagnetic wave for handling return signal and sense the obstacles.
The infrared sensing system is located at the rear, upper and lower part of the aircraft fuselage and is of the infrared TOF technology ranging to sense obstacles and the aircraft's flight altitude.

Detection range

The detection range of the visual system and the millimeter-wave radar are shown in the figure below. When the obstacle is outside of the sensor's detection range (white), the aircraft will be unable to sense the obstacle. The user should fly with caution, and pay attention to flight security.

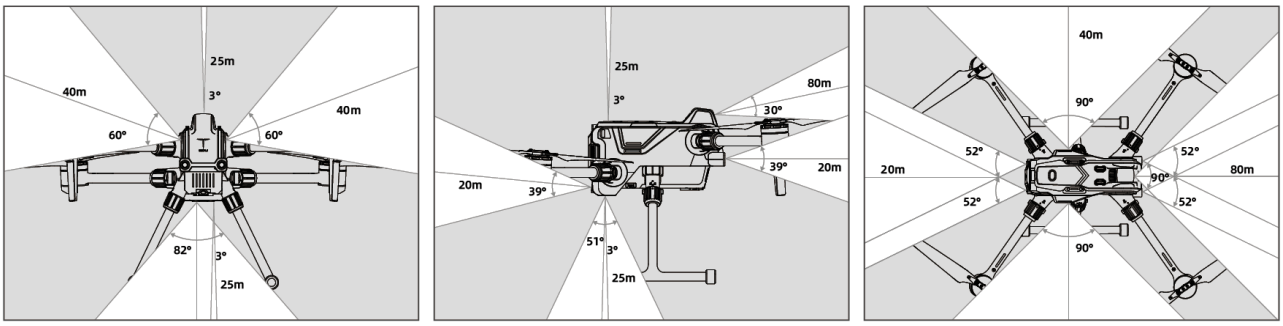

Obstacle avoidance function

The obstacle avoidance function only works in standard mode. It is required to enable the visual obstacle avoidance in the GDU Flight II App. At the same time, the user should enable the obstacle avoidance strategy button, the aircraft will automatically brake when encountering an obstacle in the flight route.

- If the obstacle avoidance strategy button is not enabled, only the obstacle position will be displayed and only an alert will be prompted. However, the aircraft will not actively avoid obstacles.

Usage scenario of obstacle avoidance function

The visual obstacle avoidance is applicable to well-lit scenarios, and the obstacles encountered on the flight route must not be too sparse. When the light is too dark, obstacle information is only provided through the millimeter-wave radar and the infrared sensor. It is recommended to set the

aircraft's safety distance in the GDU Flight II App to be greater than 2.5m. To obtain better obstacle avoidance experience, it is recommended to set the flight altitude to be greater than 10m.
During manual flight, the user can freely control the aircraft. Therefore, the user should always pay attention to the flight speed and direction, and use the obstacle avoidance function appropriately to prevent the obstacle from entering the sensor blind area, which may result in a collision.
When the aircraft is close to the obstacle, it will automatically brake in an urgent manner until hovering. After the aircraft is hovered, the user will be unable to get the aircraft close to the obstacle by pushing the control stick, and the user can push the control stick to fly the aircraft away from the obstacle to regain the control right.

Precautions for obstacle avoidance function usage

1. The visual system measurement is prone to be affected by the intensity of light and the texture of the surface. For example: When the obstacle surface is solid color with weak texture or strong reflection, the ambient light changes sharply and there is strong light, the obstacle is too tidy, or the visibility is too low, the visual system's obstacle detection will be affected or become invalid. Please use with caution.
2. The detection distance of the millimeter-wave radar depends on the obstacle size and material. For example: For strongly reflective objects (such as buildings, trees, telegraph poles), the effective detection distance is about 60m; for weak reflective objects (such as dead branches), the effective detection distance is 20m. Outside the effective detection distance, please use the radar with caution as the detection of obstacles may be affected or invalid.
3. The infrared sensing system must be used with large obstacles that have high reflectivity. For example: For obstacles with a strong absorption of light on surfaces, small obstacles, and transparent objects, please use the infrared sensor with caution because the detection of obstacles may be affected or invalid.
4. The obstacle avoidance function does not work indoors.

- Please make sure that the visual system camera lens is clear and clean. The shell case outside the radar module is clean and free of cracks, dents, or deformation.
- During usage, please do not cover the visual system camera and infrared ranging sensor, which will cause visual function errors and failure of the near-ground slow descent function, which will affect normal flight.
- If the fuselage is installed with other devices, please avoid covering the radar FOV. If the radar FOV is obstructed, the radar's obstacle sensing performance will be impaired. Please fly with caution.
- Maintain control over the aircraft throughout the flight process. Do NOT rely solely on the information provided by the GDU Flight II app. Please determine the aircraft's flight status based on observations using the naked eye and avoid obstacles in time.

Obstacle information display:

After the obstacle avoidance function is enabled in the app, a radar chart will appear on the flight interface to display the detected obstacle.
When the obstacle distance is greater than the alarm distance, the obstacle is displayed as a green point.
When the obstacle reaches the alarm distance, it is displayed in yellow.
When the obstacle approaches the obstacle avoidance braking distance, it is displayed in red.
The obstacle avoidance alarm distance and obstacle avoidance braking distance can be set in the GDU Flight II App.

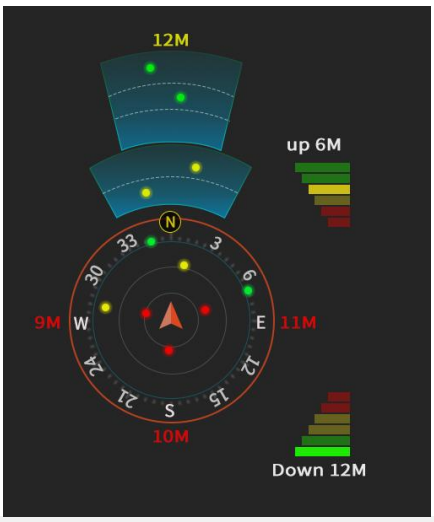

Flight data

The aircraft has a flight data recording function. During usage, all data related to flight will be stored in the aircraft. When the aircraft is powered on and connected to a computer, flight data can be exported.

Propellers

Propeller usage instructions

The aircraft is provided with 1866 propellers, which ensure takeoff and landing at an altitude of 5000m. The wind speed in the flight environment should be ≤ 15m/s.

The aircraft comes with folded propellers, which are divided into A propellers and B propellers. Please install them based on the markings on the corresponding motor.

Propellers	A propellers	B propellers
Schematic diagram	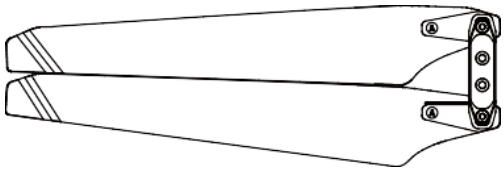	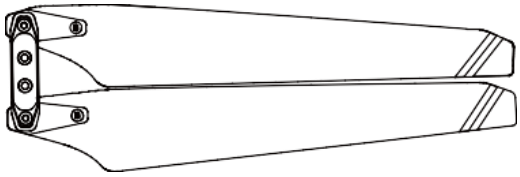
Installation position	Installed to A arms	Installed to B arms

Replace propellers

Please use H2.5 internal hexagon head wrench to replace the propellers. It is recommended only to replace propellers in an emergency situation during a field operation. After an emergency flight, please contact GDU technical support for repair as soon as possible.

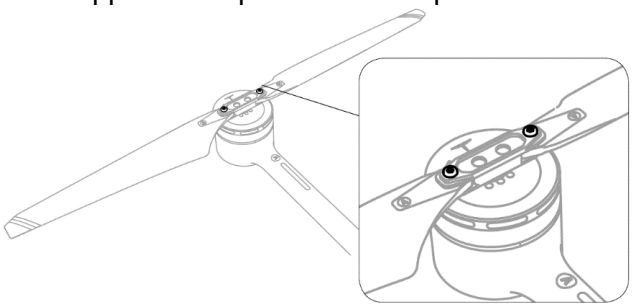

- Please use the propellers provided by GDU. Do not use propellers from different models.
- The propellers are consumables. If necessary, please purchase separately
- Before each flight, make sure to check whether the propellers have been installed correctly and firmly.
- Before each flight, make sure to check that the propellers are in good condition. Replace aged, damaged, or deformed propellers before the flight.

- DO NOT approach rotating propellers or motors to avoid injury.
- The propellers are thin and slightly sharp. Please operate with caution to avoid being scratched.
- Except in emergencies, do not replace propellers on your own. If required, it is recommended to return the product to the factory for replacement.

Intelligent battery pack

The battery pack has several battery ports and can charge up to eight PD12 intelligent batteries. The battery pack has a rod, making it easy to carry the pack outside.

Precautions for Use

1. Keep the battery pack dry. Avoid water, oil and any other liquids.
2. Do not close the battery pack for charging. Please keep it in an area that is well ventilated and cool.
3. The battery pack is only applicable for PD12 intelligent flight batteries, remote controller, and pad. Do not use the battery pack to charge batteries from other models.
4. During usage, please place the battery pack flat and avoid insulation and fire protection.
5. Do not touch metal terminals with your hands or other objects. If the metal terminal has any foreign matter, please wipe them with a cloth.
6. Be careful when opening and closing the battery pack and extension rod to avoid being pinched.
7. Place the battery in the proper direction.
8. In the event of long-term air transportation or ambient pressure changes, internal air pressure inside the battery pack may change. At this point, the pressure equalizing valve will automatically adjust to balance the internal and external air pressure without manual adjustment.
9. Please use a dust remover for dust inside the battery pack.

Component description

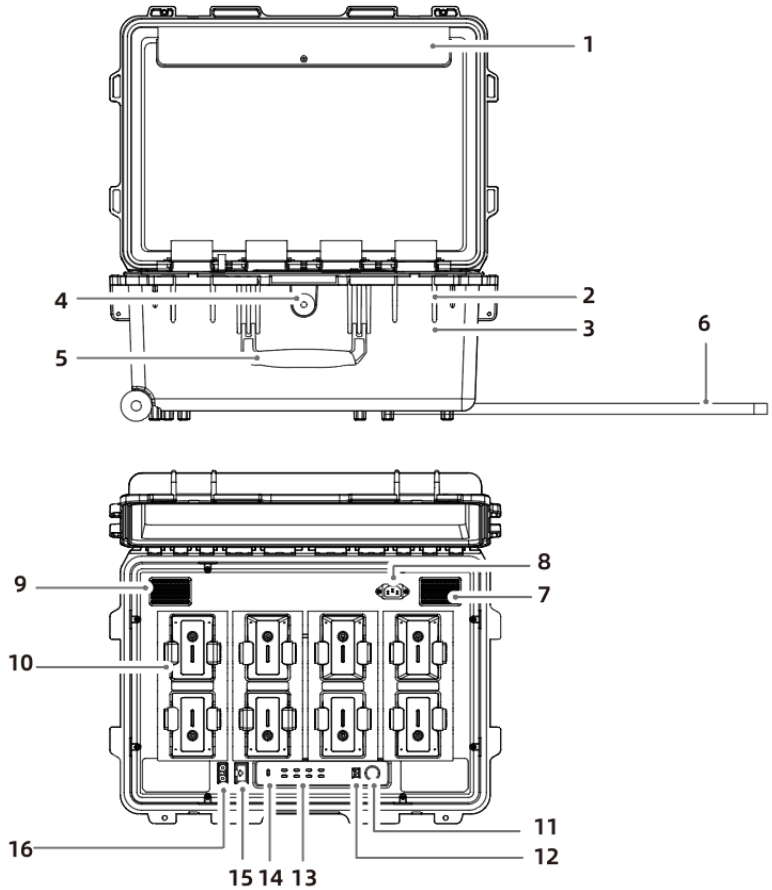

1	Storage position of power cables
2	Padlock hole
3	Hasp
4	Pressure equalizing valve
5	Handle
6	Retractable rod
7	Air intake vent
8	AC 220V power interface
9	Air exhaust vent
10	PD12 battery interface
11	Power button
12	Firmware/software update interface
13	PD12 battery status indicator light
14	Alarm indicator light
15	USB charging interface
16	DC 12V charging interface

Use

Charging

1. Use an AC power cable to connect to the battery pack's power interface to an AC power (100-240Vac, 50-60Hz).

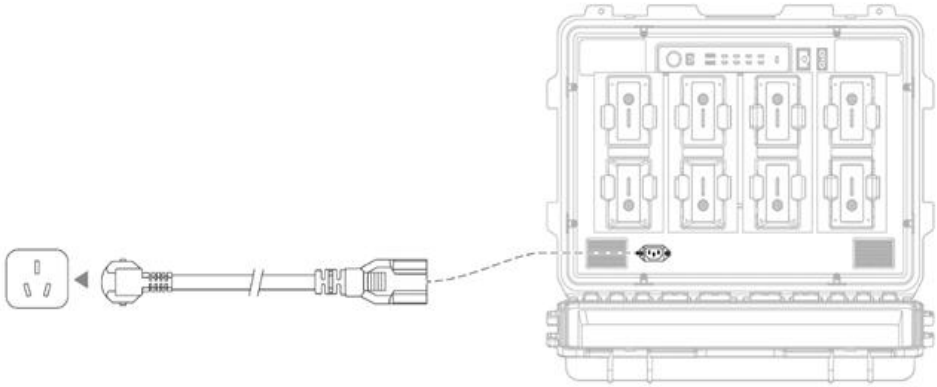

2. Press the power button to turn on the battery pack.
3. Insert a battery for charging.

It takes about 110 minutes to fully charge two PD12 intelligent batteries and about 50 minutes to charge them from 20% to 90% battery level.

Specifications

External dimensions	580mm×420mm×297mm
Empty pack weight	15±0.05kg
Compatible items	PD12 intelligent flight battery×8 AC power cable, DC charging cable, and USB charging cable
Input	90-264VAC, 47-63Hz
Output	PD12 intelligent flight battery interface: 26.4V, 15A×2 DC charging interface: 12V, 3A×2 USB charging interface: 5V, 3A×2
Output power	800W
Charging time	It takes about 110 minutes to fully charge two PD12 intelligent batteries, and about 50 minutes to charge them from 20% to 90% battery level.
Charging hub	It can perform an intelligent detection of battery levels, and the battery with a high battery level will be charged first.
Operating temperature	5℃~40℃
Protection function	Anti-backflow protection, short circuit protection, over voltage protection, over current protection, and over temperature protection
Battery status display	The battery is not inserted - The indicator light blinks red. The battery is inserted and not charged- The indicator light is solid yellow The battery is being charged - The indicator light blinks green The battery is fully charged - The indicator light is

	solid green

- It is prohibited to put a fully-charged battery into the battery pack for charging when it is powered on.

Battery Pack LED Description

Buzzer prompt tone description

The buzzer prompt tone is mainly used for indicating an error:
1.When the battery status indicator light is red, the buzzer beeps to prompt a battery charging error.
2.When the alarm status indicator light is red, the buzzer beeps to prompt a battery pack hardware error.

LED indicator lights	Description
Power button indicator light	
Green indicator light is solid on	The battery pack is powered on.
Battery status indicator light	
Green indicator light is solid on	The charging is finished
The indicator light blinks green	Charging
Yellow indicator light is solid on	Ready-to-charge status
The indicator light blinks yellow.	Low temperature/high temperature alarm (1. The battery has low temperature. Charge it after the temperature has risen; 2. The battery temperature is too high and is cooling. Charge the battery after it has cooled to the proper temperature.)
The indicator light blinks red	Battery malfunction (1. The battery is inserted reversely; 2. The battery is not fully inserted; 3. There is a battery communication error. Please use another charging interface;)
Red indicator light is solid on	The charging interface is malfunctioning. Please replace it.
Alarm indicator light	
The indicator light blinks red	Battery pack malfunction (1. The battery pack has low power voltage; 2. There is a power module communication error or some other issue; 3. The main board/fan is malfunctioning;)

- Please contact the after-sales or a local dealer.

Intelligent batteries

Introduction to intelligent batteries

The PD12 intelligent flight battery comes with a high-capacity cell and an advanced battery management system to power the aircraft. The intelligent battery must be charged with the special charger provided by GDU. Before its first use, be sure to charge the intelligent battery fully.

Intelligent flight battery function

The intelligent flight battery has the following functions:

1. Short circuit protection: When a short circuit is detected, the battery will automatically cut off output for protection.
2. Balanced protection function: Automatically balance the voltage of the internal cell to protect the battery. The battery has a static equalization and charging equalization function.
3. Overcharging protection: Overcharging will seriously damage the battery. When the battery is fully charged, it will stop charging.
4. Charging temperature protection: The battery will not begin charging at temperatures below 5 ℃ or above 40 ℃ because charging under such conditions will damage the battery.
5. Charging over-current protection: Current surges will seriously damage the battery. The battery will stop charging when the charging current is too high.
6. Overdischarging protection: Overdischarging will seriously damage the battery. When the battery is not operating during a flight, the battery will cut off output if the cell is discharged to 3.2V; when the battery is operating during a flight, overdischarge protection will not engage to ensure flight safety. When the battery is in flight discharge status the battery will turn off overdischarge protection to maintain continuous battery output, maximizing flight time in order to give the operator more time to land. Once this occurs, cell voltage is likely to be less than 2.5V due to overdischarging. Recharging an over-discharged battery may result in a serious fire risks. Therefore, when the voltage of a single cell is below 2.5V, the battery will be locked, prohibiting recharging. The battery can no longer be used. Therefore, please take careful note not to deliberately overdischarge the battery. In doing so the user takes the risk of severe battery damage. When the battery is overdischarged and locked, the battery level indicator lights will flash quickly after pressing the battery button.

Battery installation/removal

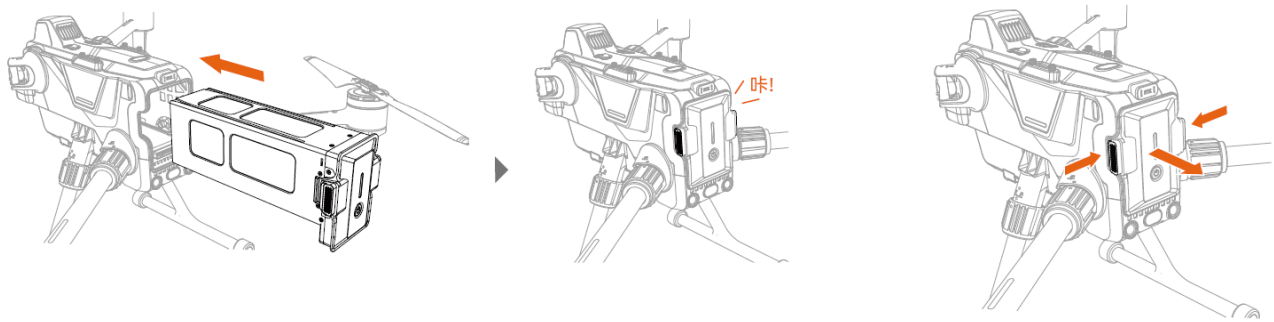

安装电池　　拆卸电池

Charging

1. Remove the aircraft battery.
2. Input voltage: 26.4V
3. Charging time: 16400mAh battery ≤120 minutes

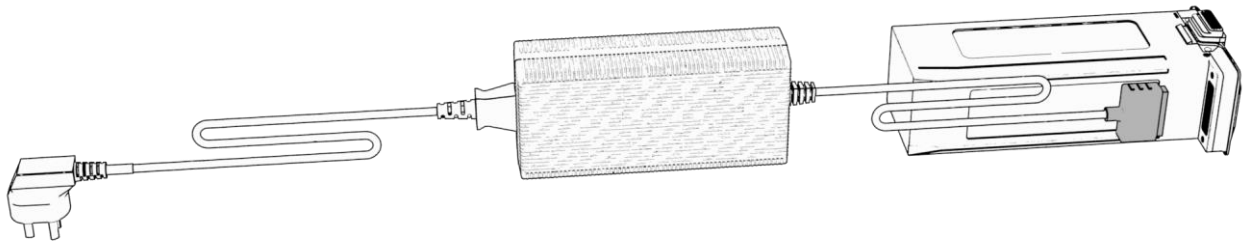

- Using this device in a residential environment may cause wireless interference.
- The socket must be installed near the device to facilitate charging.

Turn on/off the battery (with diagram changed)

Turn on the battery: When the battery is turned off, press the battery power button once, and the battery level LED indicator light blinks alternately. Press and hold the power button for 2 seconds to turn on the battery. When the battery is turned on, the battery level LED indicator lights light on from bottom to top in succession. The battery level LED indicator light displays the current battery level.

Turn off the battery: When the battery is turned on, press the battery power button once, and the battery level LED indicator light blinks alternately. Press and hold the power button for 2 seconds to turn off the battery. When the battery is turned off, the battery level LED indicator lights turn off from top to bottom in succession until all indicator lights are off.

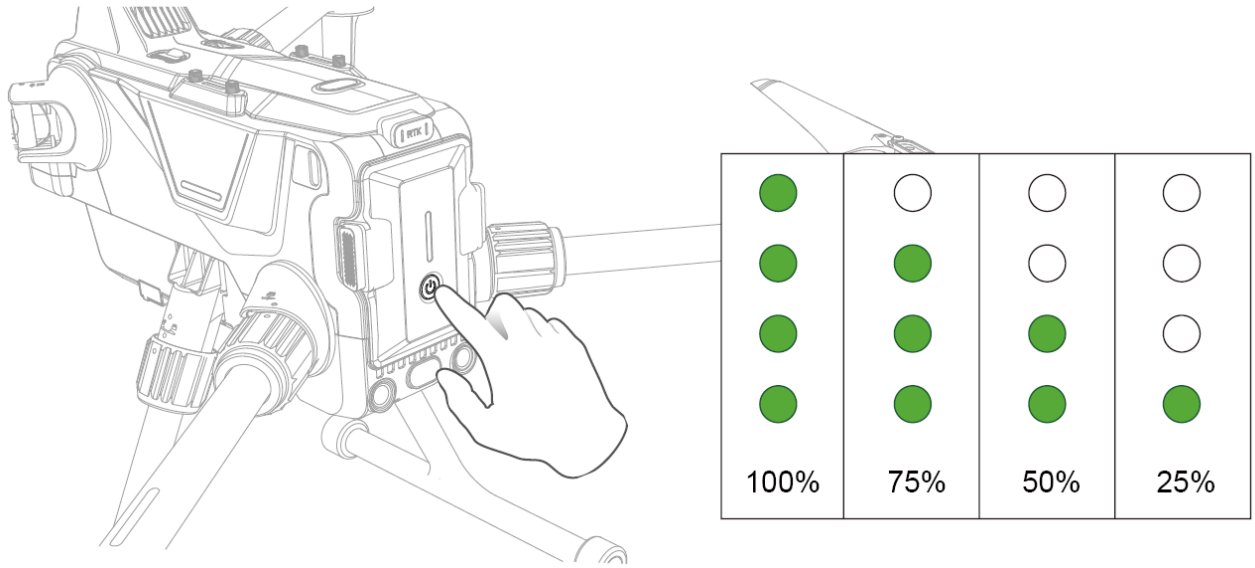

ADS-B

The manned aircraft carrying an ADS-B emitter with broadcast automatic correlation monitoring will actively broadcast its own flight information. The GDU aircraft with ADS-B can receive flight information transmitted by the ADS-B emitter in compliance with 1090ES or UAT standards . Through the received flight information, ADS-B can analyze and obtain the position of manned aircraft, altitude, course, speed, and other information, and compare with the current position, altitude, course, speed information of the GDU aircraft for real-time calculation of the rough risk level of manned aircraft. Based on different risk levels, ADS-B sends different warning information to the user via the GDU Flight II App.

This module only sends warning information regarding the approach of a certain manned aircraft under specific circumstances and cannot actively control the GDU aircraft to avoid the approaching manned aircraft. The user should always fly the aircraft within their range of visibility and ensure flight safety. This module has the following restrictions:

1. This module can only receive information transmitted by manned aircraft with an ADS-B out in compliance with 1090ES (RTCA DO-260) or UAT (RTCA D0-282). For manned aircraft not equipped with an ADS-B out or the manned aircraft that have been equipped with an ADS-B out but fails to work, this module cannot receive related broadcast information and send warning information.
2. This module functions based on wireless frequency. If there are any obstructions between the GDU aircraft and the manned aircraft, this module will be unable to effectively receive the broadcast information and send warning information.
3. Due to the change and interference of the surrounding environment, this module is likely to delay the transmission of warning information. As such, please fly with caution and keep an eye on surrounding environments.
4. When the GDU aircraft cannot effectively obtain its position, there may be an error with the warning information sent by this module.
5. When this module is powered off or does not work, it will be unable to receive the broadcast information sent from the manned aircraft, and therefore cannot send any warning information.

When the ADS-B system determines that there are any risks, it will send 3 levels of alerts based on the distance between the UAV and manned aircraft. When the user receives an alert, please land the aircraft immediately or avoid the obstacles through other methods.

(1) Level 1 alert: All flights searched by the UAV will be displayed in the app (Up to 10 flights can be displayed at the same time). Please pay attention to flight safety;

(2) Level 2 alert: There may be a manned aircraft passing by within the 2km range of the UAV. Please pay attention and avoid the aircraft;

(3) Level 3 alert: There may be a manned aircraft passing by within the 1km range of the UAV. Please pay attention to avoiding;

When a Level 1, Level 2, and Level 3 alert is given, a blue, yellow, and red aircraft icon will appear on the map page respectively.

蓝色：一级预警

黄色：二级预警

红色：三级预警

Multiple expansion devices

The aircraft has several SDK extension interfaces and can support a variety of expansion devices. The list of expansion devices is as follows: Night navigation light, rear RTK, FPV single upward gimbal component, LTE backup video transmission, and downward multi-payload component.

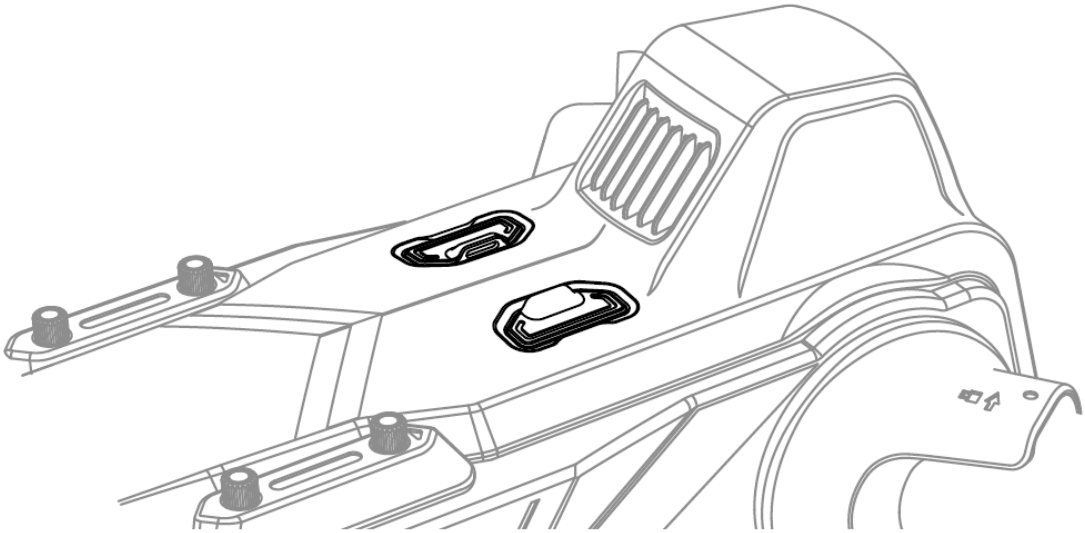

- Either a night navigation light or a parachute can be selected, as well as an FPV or a downward multi-payload component.

IP45 description

1. DO NOT fly the aircraft when the precipitation level is higher than 100mm/24h.
2. DO NOT fold the arms when it is raining.
3. Before a flight, please check that the battery port, battery compartment port, battery surface, and battery compartment surface are dry, and then insert the battery into the aircraft;
4. Make sure that the battery port and surface are dry before charging.
5. Please wipe the aircraft's surface, and ensure that there are no droplets before putting it into the package.
6. Damage caused by liquid influx is not covered by the warranty.

IP45 is not applicable to the following circumstances:

1. The arms are folded;
2. The port protective cover is not mounted properly;
3. The upper cover's dust-proof rubber falls off;
4. The aircraft has other possible damages, such as a cracked shell, waterproof glue failure, etc.

Remote Controller

This chapter introduces the various functions of the remote controller, including its set-up and aircraft controls.

Remote controller overview

The remote controller has an advanced wireless communication system. Various operations and settings of the aircraft and camera can be completed within the maximum communication distance of 15km by using the controls. The mobile device bracket of the remote controller can stably hold a mobile device. When the remote controller is used with the GDU Flight II App, the user can watch high-definition real-time video on their mobile device.

Preparation of the remote controller

Powering on/off and checking battery levels

When the remote controller is off, press and hold the power button for 3 seconds to power on the remote controller; when the remote controller is powered on, press and hold the power button for 3 seconds to power off the remote controller. After the remote controller is powered on, the power light color indicates the remote controller's battery level.

●	40%~100%	绿灯常亮
☀	15%~40%	绿灯闪烁
●	0%~15%	红灯常亮

Charging of the remote controller

When charging the remote controller, the user can determine whether the battery is fully charged based on the charger's indicator light color. When the indicator light is solid red, it indicates that the battery is being charged; when the indicator light is solid green, it indicates that the battery is fully charged. The remote controller's charging time is about 120 minutes, and the input voltage is 100-240V.

Use an intelligent battery pack to charge the battery.

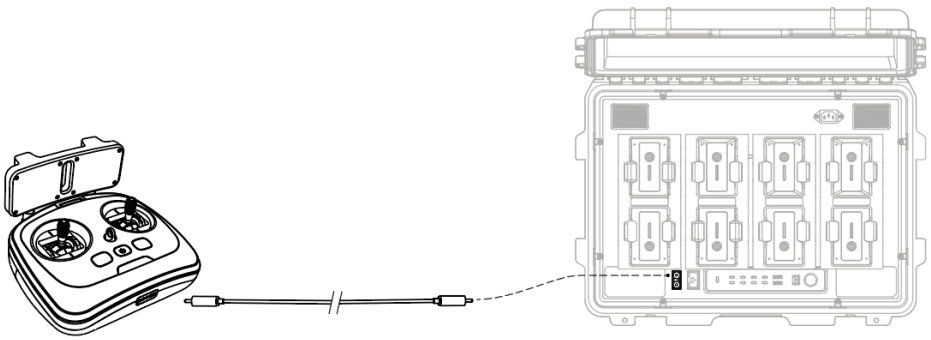

Use a charger to charge the battery.

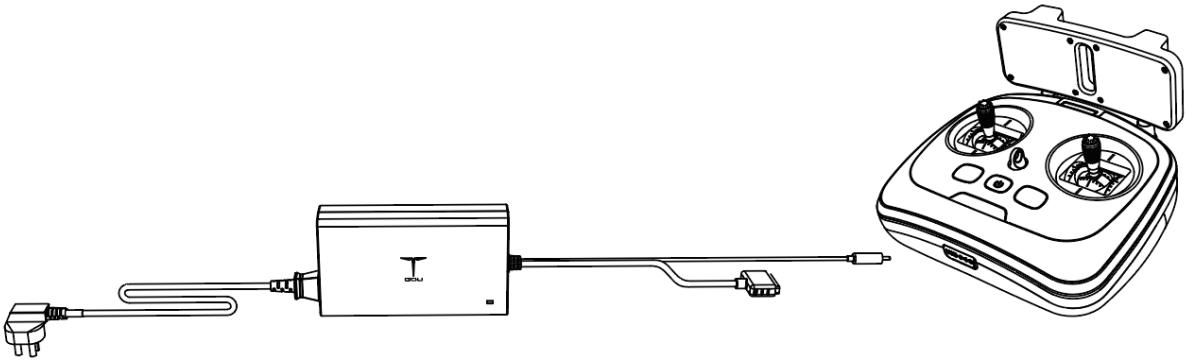

- Be sure to use an original battery pack or charger to charge the original battery and remote controller. Alternatively, use a charger provided by GDU to charge the battery. GDU takes no responsibility for any product fault or damage caused by using non-original accessories.

Mobile device bracket installation

1. Insert the mobile device bracket vertically into the socket on top of the remote controller.
2. Open the mobile device bracket and fix the mobile device into place.
3. Use a USB connection cable to connect the mobile device to the remote controller.

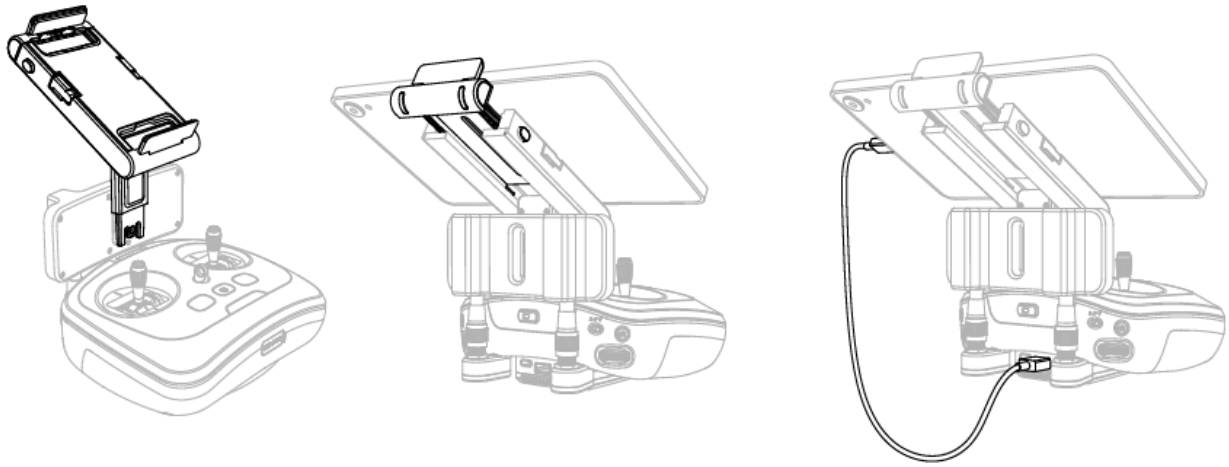

Remote controller pairing

When the remote controller and the aircraft have been purchased as a combo, it has been paired with the aircraft at the factory. In other cases, use one of the following two methods to pair:

Method I: Use the remote controller combination buttons for pairing.

1. First power on the remote controller and then the aircraft, and wait until the remote controller and the aircraft are both ready for operation.
2. Press the aircraft power button 8 times to enter pairing mode. During paring mode, the aircraft status indicator light will be solid white.
3. Press the remote controller power button and the return button at the same time. The 4 battery level indicator lights on the remote controller will blink successively; after the pairing is successful, the remote controller indicator light will be solid green and the aircraft's rear arm indicator light will also be solid green.

Method II: Use the app for pairing.

1. First power on the remote controller and then the aircraft, and wait until the remote controller and the aircraft are both ready for operation.
2. Press the aircraft power button 8 times to enter pairing mode. During paring mode, the aircraft status indicator light will be solid white.
3. Enter the "Remote Controller Settings" interface in the app, and click the "Remote Controller Pairing" button. After the pairing is successful, the remote controller indicator light remains solid green.

- If the pairing is successfully completed indoors, the rear arm indicator light remains solid yellow.

Switching between remote controller flight modes

Use the flight mode switch button on the remote controller to switch the aircraft's flight mode by pushing the switch to A mode (attitude), F mode (sport), or P mode (standard).

1. A mode (attitude)

The forward/backward obstacle sensing system, GPS positioning and downward visual positioning system are disabled; when the aircraft is not under navigation control, it will drift in a horizontal direction if the control stick is not pushed. Use of the control stick is required for real-time control.

2. F mode (sport)

Aircraft performance is enhanced, and the GPS and the downward vision positioning system still functions. In this mode, control sensitivity of the aircraft is increased. Please fly with caution. In this mode, the obstacle avoidance system is disabled, and the aircraft is unable to avoid obstacles automatically.

3. P mode (standard)

If the GNSS signal is strong, the aircraft will be positioned through GNSS; if the GNSS signal is weak and the light conditions meet the needs of the intelligent visual positioning system, the intelligent visual positioning system will be used. If both the GNSS signal and visual assistance positioning fail, the aircraft will automatically switch to A mode to be controlled by a professional pilot.

- A mode (attitude) is a professional mode. Please do not switch to this mode unless the conditions demand it.

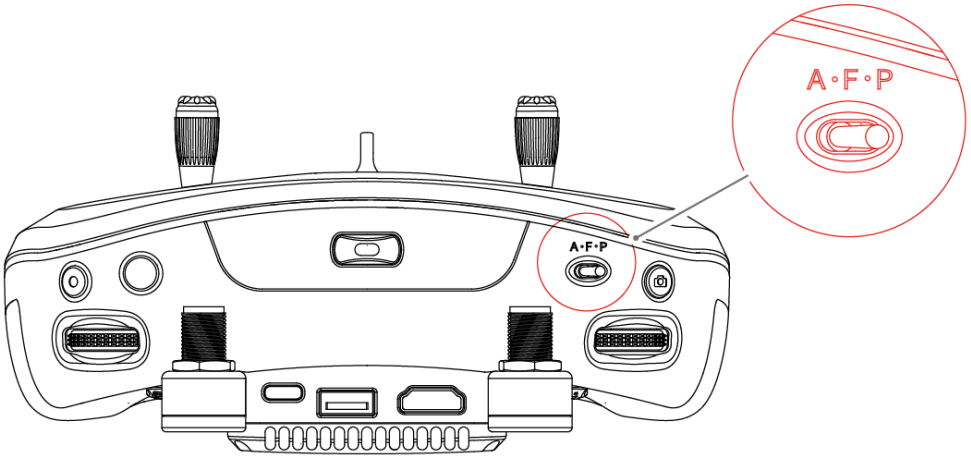

Control of the aircraft

The remote controller supports three operation modes: American mode, Japanese mode, and Chinese mode. The control stick definitions in the three operation modes are as follows:

1. American mode: The left-hand stick controls the throttle and yaw, while the right-hand stick controls pitch and roll.

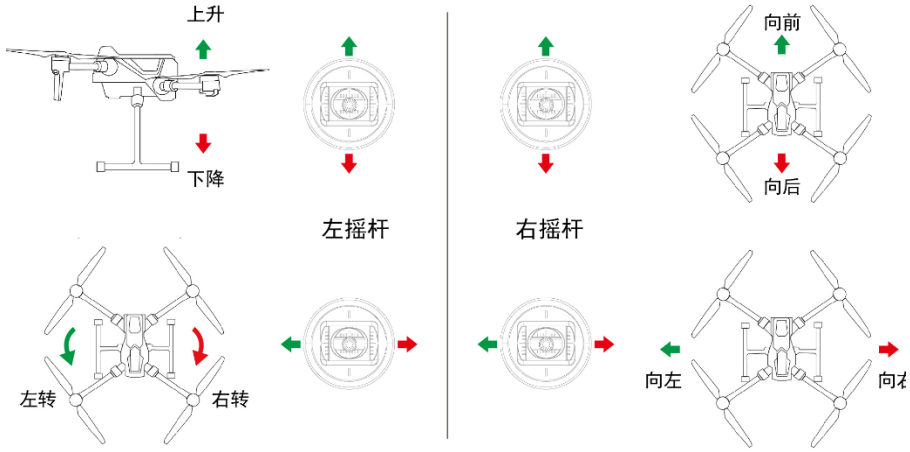

2. Japanese mode: The left-hand stick controls pitch and yaw, while the right-hand stick controls the throttle and roll.

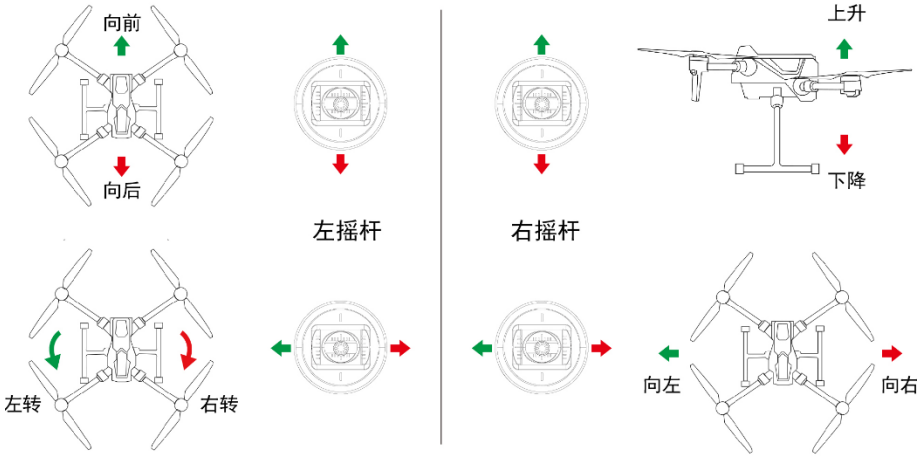

3. Chinese mode: The left-hand stick controls pitch and roll, while the right-hand stick controls the throttle and yaw.

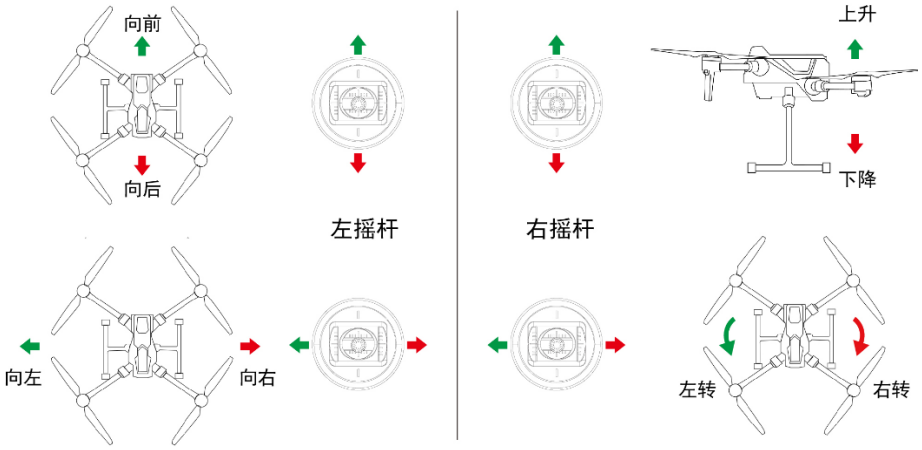

The default operation mode of the remote controller upon leaving the factory is American mode. You can enter the “Control Settings” interface in the GDU Flight II App or the remote controller debugging software to change the remote controller’s operation mode.

RTH button

Press the RTH button to enable one-button return. The aircraft will return to the latest-recorded HOME point. During the return process, press this button to end the return. The return prompt tone can be canceled.

Customizable function buttons

The controls corresponding to the customizable function buttons C1 and C2 of the remote controller can be set in the GDU Flight II App interface.

Communication range of the remote controller

When controlling the aircraft, the orientation and distance between the remote controller and the aircraft should be adjusted in time to ensure that the aircraft always remains in optimal communication range.

To obtain optimal communication range, the recommended corresponding position of the remote controller and the aircraft is shown in the figure; in addition, continuously face the antenna directly toward the aircraft to ensure optimal signal quality status between the remote controller and the aircraft.

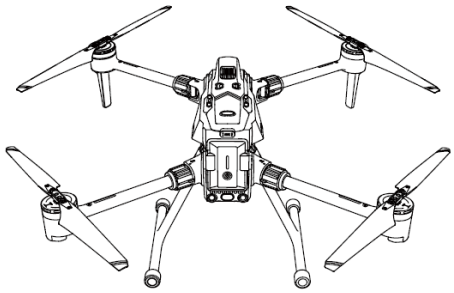

- Do not use another communication device in the same frequency band, this may interfere with the remote controller's signal.
- During actual operation, the GDU Flight II App will issue a prompt when the video transmission signal is weak. Please adjust the antenna position based on the prompt to ensure that the aircraft is in the optimal communication range.

Control of the gimbal camera

The user can remotely operate the gimbal and camera in real time through the photograph button, video button and dial wheel on the remote controller to execute the various functions.
The left dial wheel of the remote controller controls the pitch angle of the gimbal, and the right dial wheel adjusts the EV of the camera (left “-” and right “+”).

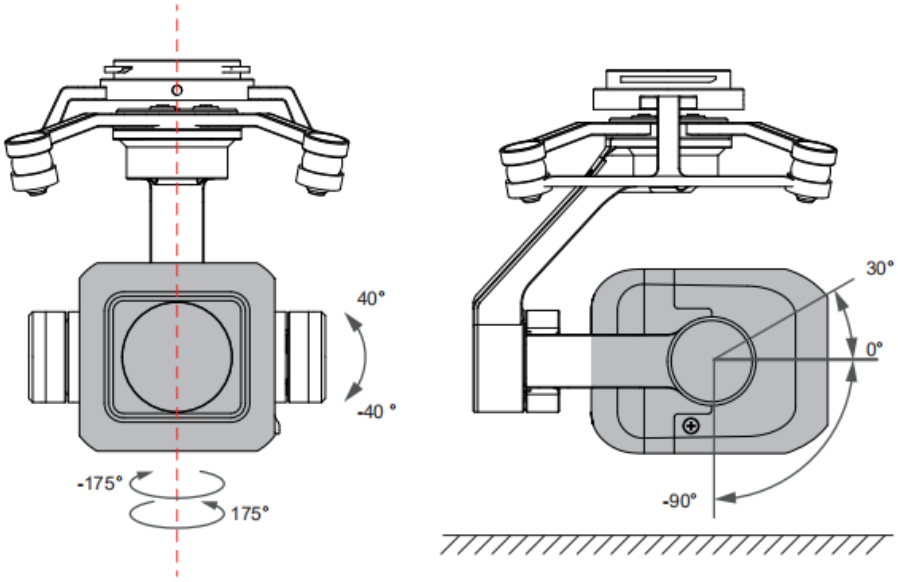

The photograph button, video button and recentering button at the bottom are all one-click operation buttons; C1 and C2 buttons can be customized in the GDU Flight II App according to your requirements.

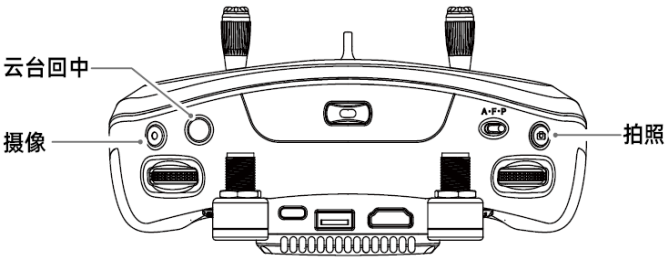

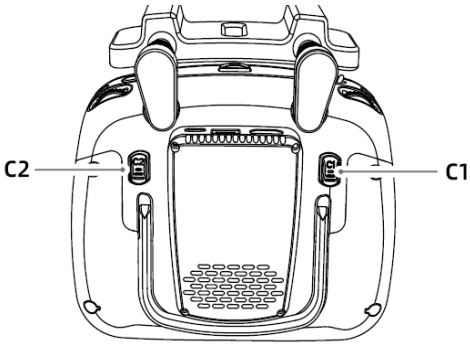

- The camera gimbal models shown in the figure are for illustration purposes only. The mounted gimbal camera configuration will vary based on the actual products used.

Advanced network connection mode

Introduction

The S400 supports an advanced network connection mode which is suitable for controlling one aircraft using multiple remote control terminals and controlling several aircraft with one remote control terminal. Based on the equal weight design principle (in other words, the roles of multiple remote controllers are not distinguished), after pairing is finished, all remote controllers can establish flight control over the UAV. During operation, the pilot can assign flight control over the aircraft and view display control as required to allow the user to be more focused and efficient during operation. There are two types of control operation parameters: Flight control and view display control. When a remote controller has the flight control assigned to it, it can control the flight; when the remote controller has the view display control assigned to it, it can display the real-time view of the current aircraft.

Setting of the advanced network connection mode

Before using the advanced network connection mode, it is necessary to set the pairing of the remote controller and UAV respectively. Refer to the steps below:

Build a network in network connection mode:

1. Select one group of paired aircraft (if the aircraft is not paired with the remote controller, please pair it again based on the single-point pairing mode);
2. Run the GDU Flight II App, enter the “More Settings” interface. Click it to enter the “Remote Controller Settings” interface;
3. Enter the Level 2 page in Advanced Network Connection mode. In the “Network Connection Mode” drop-down list, select the required Network Connection Mode (By fault: 1-to-1);
4. After switching the Network Connection Mode interface, an empty gray node icon will appear on the app network connection interface. Operate other nodes (remote controller or aircraft) to be added to the network; enter the pairing status and click the empty node on the app network connection interface; a prompt stating “Paired sent successfully” will appear on the app network connection interface;

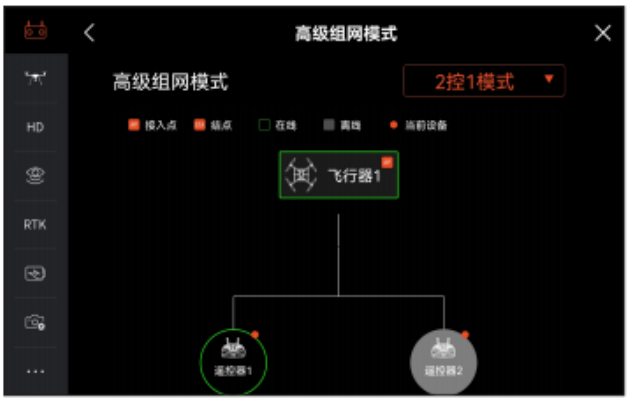

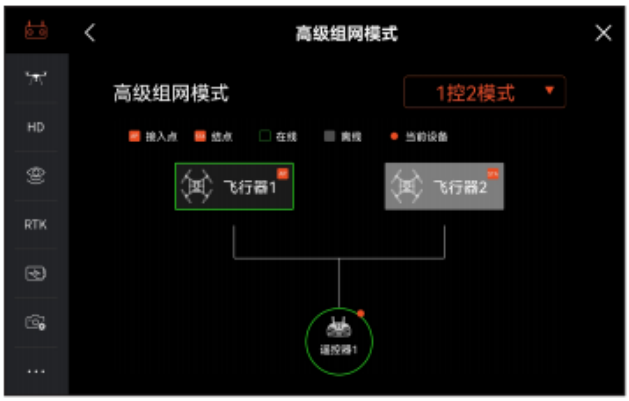

5. When the network receives the addition of an empty node, the original remote controller will be disconnected temporarily. When the empty node is added, check the icon on the app Advanced Network Connection mode interface. If it is green, it indicates that the network connection was successful, and the device is online.

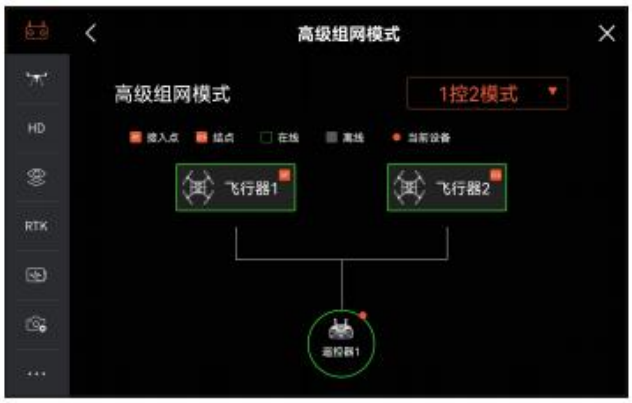

- By default, an aircraft that has an original network connection status is the network center (relay) node, and other nodes are sub-nodes;
- The remote controller is defaulted to be the aircraft's sub-node. The aircraft sub-node newly added to the network requires a master/slave switch between (The dial switch is at the rear of the left landing gear. For details, refer to the description of each aircraft component 12). Ensure that the network only has one master node.

Advanced network connection description

1. Ensure that the first remote controller has been paired and connected to the aircraft. By default, the remote controller connected first has the control right over all devices (flight control right, view display control right), and the remote controller connected later can be repaired after the remote controller connected first assigns an unpaired node position.
2. When the remote controller has authorization to control devices (aircraft, gimbal camera, view display), it can control the device using the control stick, dial, shortcut key, UI icon, and other functions. The usage method is the same as using the remote controller alone.
3. The user can click to select the aircraft to be controlled and obtain the flight control permissions and view display control right over this aircraft. They can press and hold the aircraft to be controlled to only obtain the flight control right. Only a remote controller with flight control right can enable the function to return or cancel the return.
4. By default, the Advanced Network icon on the Flight Control interface is in the Network Connection Mode (namely, one remote controller controls one aircraft). In addition, this icon is not displayed. This icon is displayed in the non-default Network Connection mode to obtain the number of specified aircraft in the current Network Connection mode (including online, offline, and unpaired statuses).
5. During flight operation, when a remote controller that has lost communication is connected to the aircraft again, it is defaulted to have control over all devices.
6. All remote controllers can set the operation of devices related to flight, including flight control software, sensing system, battery, and video transmission settings provided that the flight control permission has been granted.
7. When no operation mission is being executed, the node can be removed by pressing and holding the paired node on the "Network Connection Mode Settings" page. After the node is removed, the node position will be adjusted to be unpaired, and the device's network connection status will be reset. To pair the device again, a paired remote controller is required to specify an unpaired node position and connect the node to the network again after pairing.
8. When no operation mission is being executed, the network connection mode can be set on the "Network Connection Mode Settings" page. When the number of devices in setting mode decreases, and this type of node has been connected to all corresponding device, it is required to manually remove excessive node devices to finish the mode switch; when the number of devices in setting mode increases, the total number of devices is restricted to 2-3, including the aircraft and remote controller.

9. The node type, node number, and node sequence in the Network Connection Mode cannot be changed.
10. When all nodes in the Network Connection Mode are paired, the device cannot be connected before specifying an unpaired node; however, the remote controller in the first node can be replaced for connecting through the default remote controller pairing mode. This is applicable to initial pairing, a lost remote controller, and other scenarios.

Description of video transmission

The S400 aircraft adopts the professional video transmission technology developed by GDU that supports dual-channel 1080p video transmission and the operation of a single remote controller or multiple remote controllers

- The video transmission resolution is limited by the output capacity of different payloads. Please refer to the actual display.

GDU Flight Ⅱ App

This section describes the interfaces and functions of the GDU Flight II App.*

The GDU Flight II App is a software application which integrates a variety of professional functions to make manual flight simple and efficient. During a mission flight, the flight routes can be set through the flight planning function to control the autonomous operation of the UAV, thus simplifying the work process and improving work efficiency.

- This App is only suitable for mobile devices using Android 7.0 or above.

Homepage

Turn on the remote controller and connect to the App to enter the home page.

1. **Top Status Bar**

Display the connection status and payload model of the aircraft, remote controller, and payload.

2. **Manual flight function entry**
3. **Mission flight function entry**
4. **Firmware test, download and installation status**
5. **Device**

The main interface is defaulted to be the device interface and displays the current connection status of the UAV and remote controller as well as the payload model.

6. **Media**

Click to check the photos and videos taken during the flight mission.

7. **Me**

Click to check the flight records, find your plane, about us, settings, etc.

- The App interface and function will be updated continuously. Please refer to the latest version.
- The main interface shown varies slightly depending on the payloads.
- Turn on the aircraft. When the App displays that the aircraft has been connected, upgrade the firmware as prompted. During one-button upgrade, ensure that the mobile device has been connected to the Internet.

UAV status inspection

Before entering the flight interface, the system will check and confirm the aircraft status and important settings to ensure flight safety.

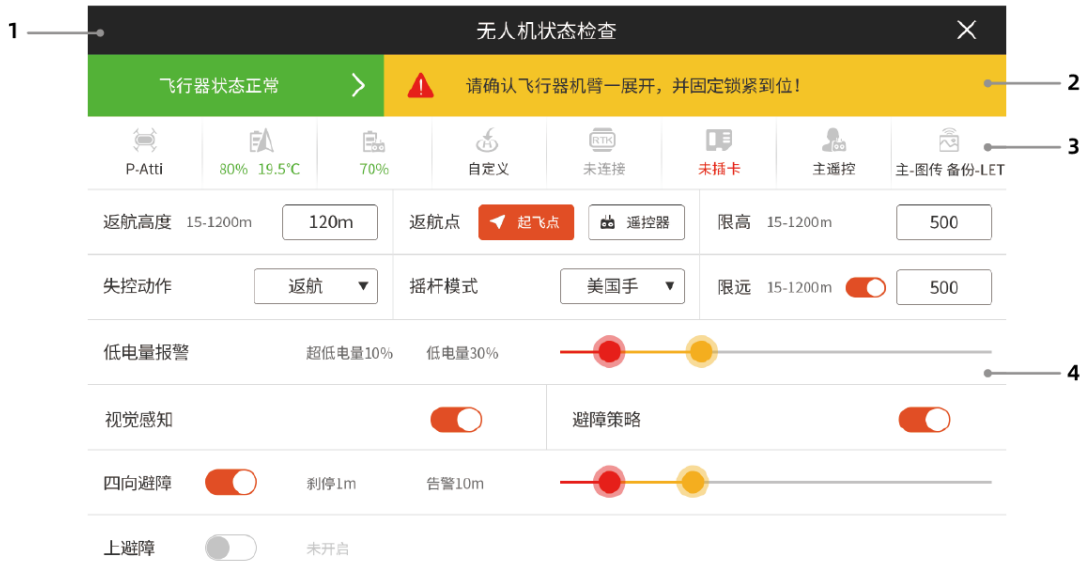

1. Aircraft system inspection: before takeoff, conduct a self-check for the aircraft system, including IMU, GPS, barometer, magnetometer, visual system, gimbal system, aircraft storage and battery system.
2. Alarm prompts.
3. Aircraft status display.
4. Flight return altitude, HOME point, out-of-control action, control stick mode, altitude limit, distance limit, low battery alert, visual obstacle avoidance and other quick settings.

Manual flight

Camera interface description

Click “Manual Flight” to enter the flight interface.

The text below uses the 8K gimbal camera as an example for illustration. The interface display may vary in the actual operation depending on the mounted gimbal camera.

1. Return to main interface

Click to return to the main interface of the App.

2. Flight status alert

正常飞行中 Display the aircraft connection status and various warning messages. Click to enter the flight inspection interface.

3. Locked/unlocked aircraft

/ Display the aircraft’s current status.

4. Flight mode

Display the aircraft's current flight mode.
5. GNSS status
Display the GNSS status. After the RTK is connected, display the RTK's status information. The signals from strong to weak include Fixed, Float, 3D, and 2D.
6. Working status of obstacle avoidance system
Display whether the current obstacle avoidance system works or not.
When the obstacle avoidance system works, green is displayed; and otherwise, white is displayed. When all status are displayed green, it indicates that the obstacle avoidance system works; and when all status are displayed white, it indicates that the obstacle avoidance system does not work now. Please fly with caution.
7. Aircraft video transmission
Display the strength of aircraft signals. When the LTE video transmission is used, display as .
8. Remote controller video transmission
Display the strength of remote controller signals. When the LTE video transmission is used, display as .
9. UAV battery level
Display the UAV's remaining battery level and voltage.
10. Remote controller battery level
Display the remote controller's remaining battery level.
11. Livestream switch
Transmit the gimbal view to the backend platform in a real-time manner.
12. Intelligent battery level icon
The remaining battery level and flight time of the current aircraft intelligent battery are displayed in real time. Different colors on the battery level progress bar indicate different battery level statuses. When the battery level is lower than the alert threshold, the battery icon becomes red to remind the user to land the aircraft and replace the battery as soon as possible.
13. Message box
Click to read all error information.
14. Object tracking
Click to enable object tracking and intelligent tracking. After manual selecting of a target, the gimbal orientation and focal length will be automatically adjusted, and the object will be tracked.
15. Point marking and positioning
Click to mark a point on the page center.
The point marking and positioning function is divided into the followings: Point marking on the flight interface and point marking on the map interface.

a) Point marking on the flight interface: Click to mark a point on the object on the page center.
-- Record the latitude and longitude as well as the altitude of the point (The marking of multiple points is supported. By default, the last point position is displayed. The flight interface does not support modification).
-- Synchronize point marking on the flight page and point marking on the map page.
Point marking failure: Weak GNSS signals will also cause a point marking failure.

b) Point marking on the map interface: Click to mark a point on the map center. After selection, the interface will display the point position name and number, aircraft altitude (namely, the aircraft altitude while recording the point), relative altitude, altitude, and latitude and longitude. The selected point can be edited as follows: 1. Set the point as the HOME point; 2. Edit the point position, including its name, latitude and longitude, altitude, and marked color; and 3. Delete the point.
After entering the editing status, the point position can be changed by dragging it on the map.
16. Gimbal angle
Display the current gimbal pitch angle.
17. Photograph/video mode switch
Click to switch the current Photograph/Video mode.
18. Photograph/video button
/ Click to trigger photo taking or to start/stop video recording. Press the photograph/video button on the remote controller to take photos/record videos.
19. Media preview
Click to quickly preview the photos/videos taken by the camera (non-camera's original photos/videos).
20. Camera settings
Click the button to set camera parameters and control the gimbal.
21. Flight data
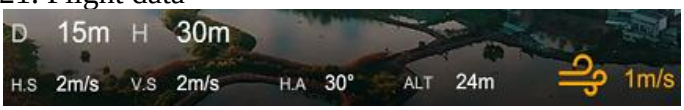

D: Distance; H: relative altitude; H.S: Horizontal speed; V.S: Vertical speed; H.A: Aircraft course angle; ALT: Altitude;
Wind direction/speed display; (for example: E4.0m/s: East wind, wind speed 4.0m/s)
22. Map/attitude indicator switch
Click to switch the picture-in-picture window to map/attitude indicator.
23. Real-time map
The area displays the real-time position of the UAV and the user on the map. Click to switch to the map page.
24. One-button return
Click to automatically return and land the UAV.
25. One-button takeoff/vertical landing
/ Before takeoff, display the one-button takeoff button; and after takeoff, display the vertical landing button.
26. Settings
Click to enter the UAV System Settings interface, including control settings, flight settings, video transmission settings, sensing settings, RTK settings, intelligent battery, camera settings, and general settings.

Map interface description

Click to switch the map thumbnail to the map interface.

27. Map style switching

Click to change the map display style between the normal map and satellite map.

28. Orientation lock

Click to lock the mobile device map orientation. After locking, the orientation on the map is always facing north.

29. Positioning

Click to position the aircraft's current position.

30. Electric fence

After setting the electric fence, the aircraft can fly safely in the electric fence.

31. No-fly zone

After setting the no-fly zone, the aircraft cannot take off from this zone, and cannot fly into this zone.

32. Exit

Click to exit the electric fence and no-fly zone.

33. Camera interface switching

Click to switch to the camera interface.

Description of setting interface

Click the Setting button to enter the setting interface.

34. Remote controller settings

The user can set the network connection mode, switch control modes, customizable C1\C2 button, and remote controller pairing.

35. Flight settings

Set the altitude limit switch, distance limit switch, return altitude, return speed and lost communication. It is permitted to switch the flight mode, advanced settings, sensor status, etc.

36. Video transmission settings

Switch between the main link and backup link, and select the working frequency and channel mode.

37. Sensor settings

Set the visual obstacle avoidance, obstacle avoidance strategy, display radar chart, auxiliary light, landing protection, obstacle avoidance, etc.

38. RTK settings

Enter the server address, port, mounting point, account, and password to display the RTK status information and service type. Positioning accuracy maintenance mode and RTK service type selection: network RTK and GDU mobile station RTK.

39. Intelligent battery

Click to check the battery voltage difference, temperature, voltage, current, battery level, and number of cycles, and to set the low battery alert value and emergency low battery alert value.

40. Camera settings

Click to set the video size, photo resolution, gimbal drift calibration, coding format, storage capacity, gimbal pitch speed, etc.

41. General settings

Click to set the grids, sound prompts, attitude prompts, parameter units, video livestream, aircraft information, and auxiliary light settings, etc.

- The App interface language must be the same as the mobile device's system language. To change the interface language, please change the mobile device's system language first.
- The interface shown varies slightly depending on the payloads.
- The App interface and function will be updated continuously. Please refer to the latest version.

Advanced network connection function

Operation interface description:

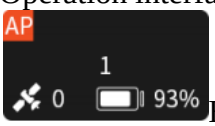

By default, there is no control right, and only the images can be viewed.

Double click to gain/cancel the control right (with a small green remote controller icon appeared) so as to control the selected aircraft. By default, there is no control right, and only the images can be viewed.

Press and hold to lock/unlock the control right (with a small golden lock appeared), so as to lock the control right. Then, the remaining remote controllers cannot be obtained.

Mission flight

Mission flight is divided into waypoint flight, 2D flight and 3D flight. In mission flight, the flight route and waypoint can be set separately.

When creating 2D flight and 3D flight, the number of waypoints must be 3 or more than 3 to automatically generate a regional flight route. In a flight route mission, general settings, advanced settings, as well as latitude and longitude settings can be performed.

Waypoint flight

Click waypoint flight to select the track mission in the mission list so as to execute the track mission; or create a new flight route mission.

Click a map to add waypoints, and then set the flight route and waypoint.

1. Mission saving

Click to save current parameters.

2. Expanding/closing

/Click to expand/close the taskbar.

3. Delete the selected waypoint

Click to delete the currently selected waypoint.

4. Return

Click to return to the previous interface.

5. Mission name edit

Click to edit the mission name.

6. Flight route information

Display the number of waypoints, flight time, flight route length and regional area.

7. Execution

Click this button. Then, the App will pop up the flight preparation list. The user can check parameters and flight status. Click “Start flight” to execute the current flight route mission.

8. General settings

Click to set the flight route’s flight altitude, flight speed, gimbal angle, and more actions.

9. Slider

Drag the “Slider” or click “ / ” to set the flight altitude, flight speed, gimbal pitch angle, execution progress, and other parameters.

10. Action after completing a mission

Click to set the hovering, vertical landing, and returning function.

11. Response to lost communication

Click to set response to/no response to lost communication.

12. Elevation difference handling

Click to set the diagonal flight or zigzag flight.

13. Execution progress

Display the flight route mission's execution progress.
14. Click to switch between "relative altitude" and "absolute altitude".
15. Waypoint settings
Click to set the altitude, flight speed, gimbal pitch angle, waypoint action, elevation difference handling, and other settings for a single waypoint.
16. Settings
Click to set a single waypoint.
17. Latitude and longitude settings
Click Up/Down to set the latitude; and click Left/Right to set the longitude.

Aircraft point position collection

Click "Waypoint Flight" → "Create a Mission" → "Aircraft Point Collection" to enter waypoint editing.
When the aircraft's takeoff altitude is above 10m, click the Point Collection icon to record the aircraft's current latitude, longitude, and altitude as the waypoint. The App will calculate the flight route length and estimated flight time based on the number of waypoints.
Click "Waypoint Flight" → "Create a Mission" → "File Import".
1. Generate files in KML or XML format through the platform, and import the files into the mobile device file folder.
2. Select the required file and import it into the mission list to enter offline waypoint editing.

- When the execution progress is > 0, general settings and advanced settings are not available. The waypoint flight operation is not affected.
- When the user selects to respond to lost communication, please enter Flight Settings to set lost communication.
- When the user selects not to respond to the lost communication settings, if the aircraft and the remote controller cannot communicate normally, the track mission can continue.
  Complete the execution.
- During the aircraft point collection, the aircraft altitude is above 10m.
- When the aircraft is returning, landing or when the flight mode is the A mode, it is impossible to enable the intelligent mode settings. Once
  said situation occurs during function operation, the function will exit immediately.

Flight

This chapter introduces flight precautions, flight restricted areas and aircraft precautions

Before a normal flight, please ask the professionals to conduct flight training and guidance training. During flight, please choose an appropriate flight environment to ensure the flight safety. Before a flight, be sure to read the Disclaimer and Safety Guidelines to learn safety precautions.

Flight restriction functions

No-fly zone

The no-fly zone is based on the 12 coordinate points of the restriction surface and tolerance buffer zone of civil airport obstacles published by the Civil Aviation Administration. The aircraft cannot take off in a no-fly zone. When approaching from an external area to the buffer zone at the no-fly zone boundary, the aircraft will automatically decelerate and hover.

When the aircraft enters a no-fly zone due to special reasons, the forced landing function will be triggered. At this point, the aircraft will be forced to land. During descending, the aircraft can move in the horizontal direction, but the control stick cannot be pushed upwards.

The altitude limit zone is a rectangle area of roughly 20km wide and 40km long by extending the midpoints at both ends of the runway outward for 20km, and extending for 10km along the two sides of the runway (the non-intersect part with the no-fly zone). In the altitude limit zone, the aircraft's flight altitude is restricted to 120m.

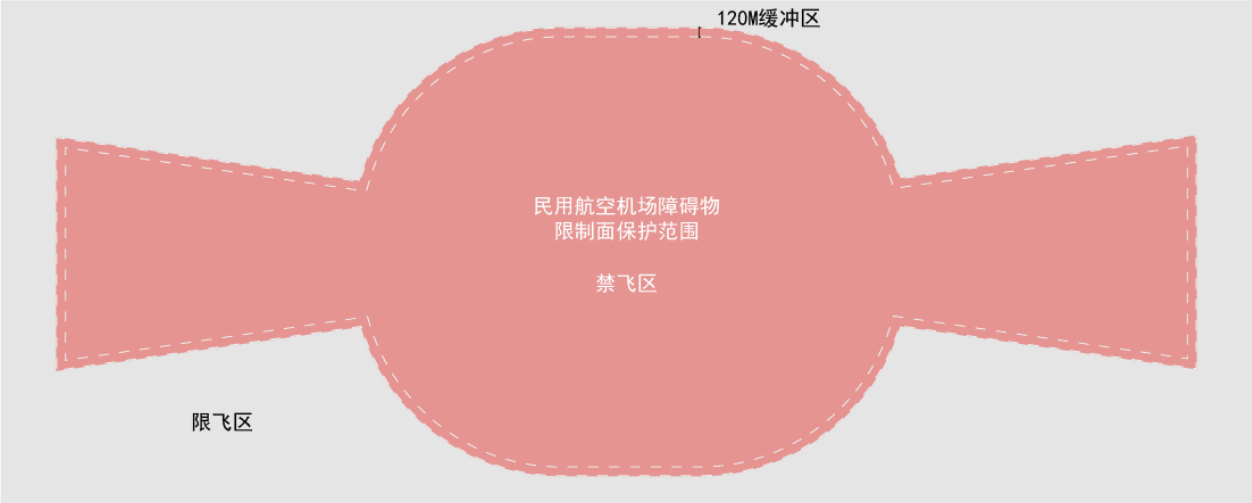

Flight environment requirements

1. No flight is allowed in severe weather conditions, such as heavy winds (with wind speed > 15 m/s). When flying in the rain, be sure to follow the IP rating requirements. Please read details of IP45 rating description.
2. Select an open area without tall buildings around as the flight site. Buildings with a large amount of reinforcing steel bars will affect the compass usage, and block GNSS signals, resulting in a poor effect or even failure of aircraft positioning. Please fly as prompted in the App.
3. During flight, please use the aircraft only within your own visual range, and avoid any obstacles, people, water, etc.
4. DO NOT use the product in close proximity to high-voltage cables when RTK mode is not enabled.
5. DO NOT use the product in proximity to communications base stations or towers, as they are prone to interfere with communication signals.
6. In high altitude areas, environmental factors may result in aircraft battery and propulsion system performance impairment, thus affecting the flight performance. Please fly with caution.
7. In the antarctic circle and arctic circle, the aircraft cannot fly in P mode. Please fly with caution.

Buffer zone

The buffer zone is the zone by extending the no-fly zone outwards by 120m.

1. When the aircraft approaches to the buffer zone, the App starts to prompt the user that the aircraft is approaching the no-fly zone. Please note the flight direction.
2. When the aircraft enters the buffer zone, the same will start automatic braking until hovering.

Within the buffer zone, pushing the control stick towards the no-fly zone direction will not work. However, the control stick can be pushed in other directions within the altitude limit range.

Mission flight

1. When the mission flight route is within the no-fly zone, the aircraft cannot take off and cannot execute the mission.
2. In the restricted zone, when the point height of the flight route mission does not exceed the 120m altitude limit, the mission can be executed normally; and when the set altitude is higher than the 120 m altitude limit, the aircraft will hover at 120m.
3. When the waypoint A in the flight route is within the restricted zone, and waypoint B is outside the restricted zone and above the altitude limit, the aircraft will first fly to the altitude limit A1 and move horizontally out of the restricted zone to A2 position. Then, it will adjust the altitude to B point altitude and reach the A3 position to execute the mission. As shown in the figure below:

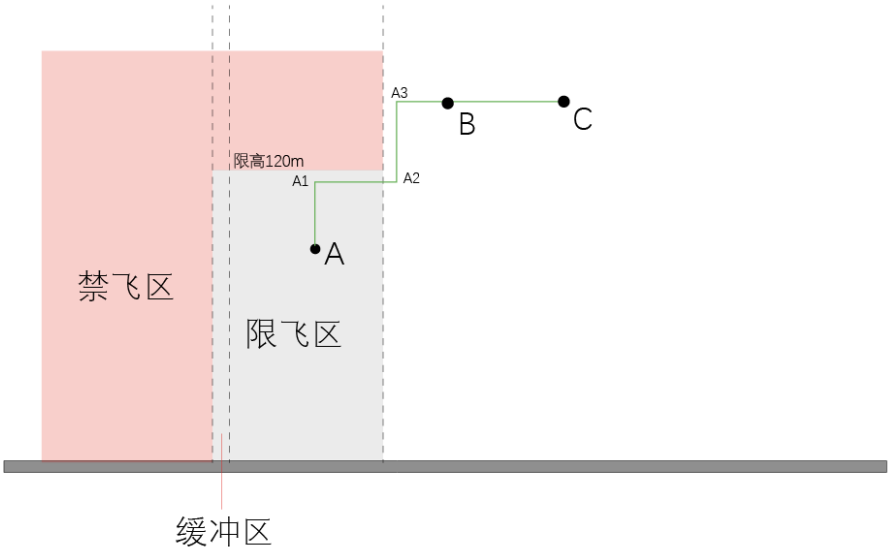

Electric fence system

Description of special zone flight restriction

The text below describes the special zone flight restrictions.

Zone	Special zone flight restrictions
No-fly zone	Takeoff: The motor cannot be unlocked. During flight: When the aircraft approaches from an external zone to the no-fly zone boundary, it will automatically decelerate and hover.
Altitude limit zone	During flight: When the GNSS signal is strong, the aircraft cannot exceed the altitude limit. If the altitude limit is reached, the App will prompt that “Altitude limit is reached” and the aircraft will hover. During flight: When the aircraft’s GNSS signal is changed from poor to good, and if the limit altitude limit in the altitude limit zone is exceeded, the aircraft will automatically descend to below the altitude limit, and hover.
Free zone	The aircraft can fly normally without flight restrictions.

Pre-flight check

- Carefully check whether all parts of the aircraft are in good condition. If there are any cracks or damage, please stop flying.
- Check whether the battery, remote controller, and mobile device have sufficient battery level.
- Ensure that the arms as well as the landing gear are unfolded and make sure the propellers are installed firmly.
- Ensure that the remote controller is properly connected to the aircraft.
- Check whether all firmware versions are the latest and whether the app is properly connected to the remote controller.
- Ensure that “Normal flight” is displayed on the app camera interface.
- Check whether the motor and gimbal are functioning after the aircraft is powered on.

Magnetometer calibration

Please perform magnetic calibration during initial usage of the aircraft or when the flight area varies greatly.

Magnetic calibration method: When the light is solid green, launch the app and enter “Flight Settings” - “Sensor status” - “Compass.” Click the “Magnetic calibration” interface to enter the magnetic calibration mode. The aircraft indicator light is solid yellow.

1) Rotate the aircraft clockwise horizontally. When a prompt stating “Horizontal calibration succeeded” appears in the app, and the indicator light blinks white, it is ready for vertical calibration.

2) Rotate the aircraft clockwise in the vertical direction. When a prompt stating “Vertical calibration succeeded” appears in the app, and the indicator light is solid green, it indicates that the magnetic calibration is complete.

Takeoff/landing

Takeoff: Click “One-button take-off” in the app. The aircraft will take off and ascend to 1.5m for hovering; or push the control stick to the inner corner to unlock the aircraft motor startup. Push the throttle stick upwards .

Landing: Press or click the “one-button return”/“vertical landing” on the remote controller; Or, push the throttle stick downward until the aircraft lands . After maintaining this status for 2 seconds, the motor will stop. After flight, please power off the aircraft and remote controller in succession.

Emergency propeller stopping

When the aircraft has a serious malfunction in the air, press the combination buttons “one-button take-off button + video button” to enable the Emergency Propeller Stop function. After that, the aircraft will drop where it is to reduce loss.

During normal flight, do not use the Emergency Propeller Stop function to avoid loss.

- Before takeoff, the user should face the tail and keep an appropriate safety distance from the place where the aircraft is located.
- Do not unlock and launch the aircraft from a slope that is at a substantial incline.

Basic flight

1. Place the aircraft on a flat and open ground. The user should face the tail.
2. Power on the remote controller and the aircraft.
3. Launch the GDU Flight II App, then connect the display device and remote controller. Enter the camera interface.
4. After connecting successfully, the front arm indicator light will turn on, and the rear arm indicator light will be solid green.
5. Push the control sticks to start the motor. Slowly push the throttle stick upwards to take off the aircraft stably.
6. Before descending, slowly push the throttle stick downwards to land the aircraft slowly on the ground.
7. After landing, push the throttle stick downward and continue to do so until the motor stops.
8. After the motor stops, power off the aircraft and remote controller in succession.

Appendix

Technical specifications

S400 technical indexes

Entire machine	
Dimension	Folded (including propellers): 347×367×424mm (L×W×H) Unfolded (including propellers): 950×995×424mm (L×W×H) Unfolded (excluding propellers): 549×592×424mm (L×W×H)
Hovering time	No load: 63min (measured when the aircraft is flying without a payload in windless conditions)
Symmetrical motor diagonal distance	≤ 725mm
Weight	2.35kg (excluding batteries)
Maximum takeoff weight	7kg
Maximum payload	3kg (Under the maximum payload, the maximum safe flight speed is only 15m/s)
Noise	≤ 58dB@5m position
Propeller	1866 folded propellers
Flight control software performance index	
Hovering accuracy (GNSS)	Horizontal: ±1.5m (with GNSS positioning) Vertical: ±0.5m (with GNSS positioning)
Hovering accuracy (with vision positioning)	Horizontal: ±0.3m (with GNSS positioning) Vertical: ±0.3m (with GNSS positioning)
Hovering accuracy (RTK)	Horizontal: ±0.1m (with RTK positioning) Vertical: ±0.1m (with RTK positioning)
RTK position accuracy	When RTK is fixed: 1cm+1ppm (horizontal) 1.5cm+1ppm (vertical)
Maximum angular velocity	Pitch axis: 200 °/s Yaw axis: 100 °/s
Maximum pitch angle	30 °(45 °during emergent braking and startup)
Maximum ascent speed	F mode: 5m/s P mode: 4m/s
Maximum descent speed	F mode: 4m/s P mode: 3 m/s
Maximum wind resistance	15 m/s (Level VII) The maximum wind resistance is 12m/s during taking off and landing.
Maximum flight speed	F mode: 23m/s P mode: 15m/s
GNSS satellite search time	Cold-startup satellite search time: ≤3.5 minutes Hot-startup satellite search time: ≤50 seconds
IP rating	IP45
Operating temperature	-20° C~55° C
Maximum takeoff altitude	5000m
Visual system	
Obstacle sensing range (Buildings, trees, telegraph poles, and pylons above 10 m)	Front: 0.7m~40m (the maximum detection distance is 80m for large-size metal objects) Left and right: 0.6m ~30m (For large-size metal objects, the maximum detection distance is 40m) Up, down, and rear: 0.6m~25m
Operating environment	Surfaces with clear patterns and adequate lighting (> 15 lux, normal lighting environment under fluorescent lamps indoor)

Compatible gimbal	
Gimbal types	PVL-8K gimbal camera, PDL-300 thermal & visible dual gimbal camera, PDL-1K dual-lens gimbal camera, PQL01 quad-sensor gimbal camera
Gimbal mechanical interface	Gimbal payload standard interface
Data interface	Second-generation extension interfaces
Video transmission	
Video transmission distance	15km (maximum distance in a line-of-sight and unobstructed environment)
Remote controller	
Video output port	USB, network, HDMI
Power supply mode	Battery
Operating time	> 4 hours
Battery	
Battery capacity	16400mAh
Voltage	23.1V
Battery type	LiPo 6S
Energy	379Wh
Overall battery weight	About 1.7kg
Operating ambient temperature	-20° C~55° C
Ideal storage temperature	22° C~30° C
Charging ambient temperature	5 ℃~45 ℃ (Low-temperature charging will shorten the battery's service life)
Charging time	It takes about 120 minutes to fully charge a battery when using a standard charger.
Battery pack	
Aircraft battery charging time	It takes about 120 minutes to fully charge an intelligent battery, and about 50 minutes to charge a battery from 20% to 90% battery level.
Remote controller battery charging time	It takes about 120 minutes to fully charge a remote controller battery.
Charging current	15A
Charging ambient temperature	5° C~40° C
FPV camera	
Resolution	1080P
FOV	132 °
Frequency	30fps

Firmware update

Remote controller upgrading steps

S400 remote controller firmware upgrade

Use the remote controller's parameter adjustment tool for performing upgrades:

1. Visit the official website to download the remote controller's firmware upgrade package and the remote controller's parameter adjustment tool.
2. When the remote controller is powered off, use the Micro USB cable to connect the Micro USB interface on the bottom of the remote controller to the computer.
3. Launch the remote controller parameter adjustment tool and power on the remote controller.
4. Click "Start Connection" and check whether the remote controller's connection status is normal.
5. Click "Firmware Upgrade." Select the downloaded remote controller's firmware upgrade package and open the file to start the upgrade.
6. Wait until the remote controller upgrade is completed. After upgrading, the remote controller will power off automatically.
7. Manually restart the remote controller. Click "Start Connection" to check the new remote controller's firmware version number.

- When upgrading, ensure that remote controller's battery level is above 20%.
- Do not plug or unplug the USB cable while upgrading.

Aircraft upgrading steps

1. Launch the GDU Flight II App to automatically enter the firmware testing status.
2. If there are different versions, a prompt to upgrade will appear on the interface. Click "upgrade immediately" to begin downloading the firmware installation package.
3. After downloading, the firmware installation package will be installed automatically.
4. After upgrading, please restart the device.

S400 payload compatibility table

S400 supports a single downward gimbal. For compatible payloads, refer to the table below.

Number	Product name	Model
1	8K camera	PVL-8K
2	Thermal & visible dual camera	PDL-300
3	1K infrared thermal & visible dual camera	PDL-1K
4	Quad-sensor camera	PQL01

Use the multi-payload module

The multi-payload module is used to mount the gimbal camera to the bottom of the S400 aircraft.

Installation steps of dual-payload module:

1. Press the rotating ring button on the dual-payload module and rotate it clockwise to the left.

2. Align the dual-payload module and the red point on the UAV payload interface. Put it inside and rotate the rotating ring by 90 °based on the direction shown in the figure to lock it tightly. After locking, the support will be fixed and unable to rotate.

Removal steps for the dual-payload module:

1. Press the upper payload interface button and rotate the multi-payload module clockwise to make it disengage from the center position.

2. Press the lower multi-payload module rotating ring button and rotate the rotating ring of multi-payload module by 90 °based on the direction shown in the figure until it is aligned with the red point on the UAV payload interface. Then, remove the multi-payload module downward.

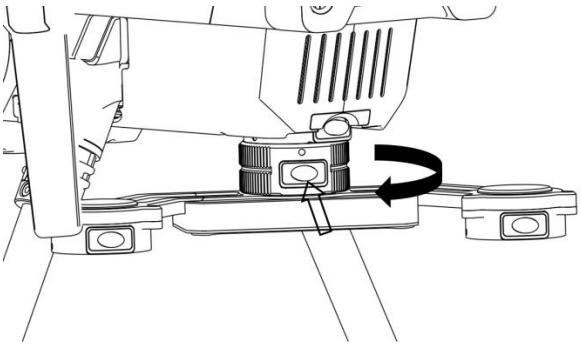

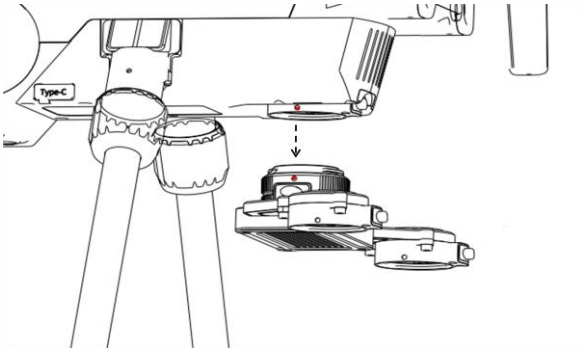

- During installation and removal, rotate the support of the multi-payload module to help increase the speed of installation and removal

A4G-400 network card package

Installation

Please follow the steps below to install the kit in the aircraft.

1. Insert the wireless dongle with a SIM card to the USB port of the installation support, and cover the wireless dongle protective cover.
2. Use a cross-head screwdriver to remove the screws on the bottom of the fuselage and remove the rubber plug.
3. Align the A4G-400 network card package to the fuselage screws and use a cross-head screwdriver to secure the screws.

- The LTE backup link is prone to be affected by the operator’s real-time network environment. It is recommended to use an non-IOT network card.

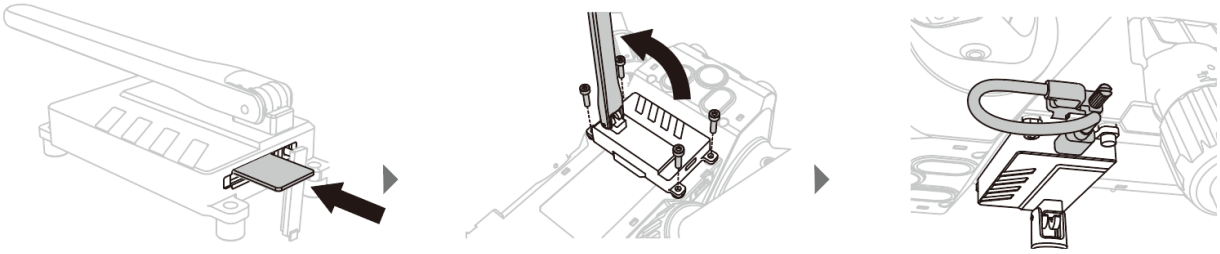

Use

1. Ensure that remote controller and the aircraft are properly installed with the wireless dongle with an SIM card and ensure that the network page can be accessed normally.
2. Power on the remote controller and aircraft.
3. Launch the GDU Flight II App and enter the video transmission settings interface to set the HD and LTE link. There are the following modes:

1) Automatic mode: This mode HD is a master video transmission link HD. When there is interference with the video transmission signal, it will automatically switch to LTE video transmission. When the video transmission signal is restored, the mode will be automatically switched back to the video transmission link.

2) Video transmission link mode: This mode only supports the video transmission link and does not support the LTE video transmission.

3) LTE link mode: This mode is LTE link mode, and LTE link is a master video transmission link. it will be switched to the video transmission link only when the LTE link fails. If it is not set again, it will not return to the LTE link.

- LTE link must be used with the A4G-S400 component module. This function is not available if the A4G-S400 component is not installed (The A4G-S400 component module is an optional accessory).
- Currently, the LTE backup link function is only supported in mainland China.
- Before takeoff, ensure that the A4G-S400 network card package and the wireless dongle have been fixed onto the aircraft to avoid having them fall off due to heavy wind or aircraft vibration during the flight process.
- The LTE backup link cannot be used with dual remote controllers.
- Due to the LTE signal coverage issues, it is likely to encounter a signal dead zone, resulting in the aircraft going out of control. Before takeoff, be sure to set the aircraft behavior (such as return altitude and HOME point) when the signal is weak based on the flight environment. If the signal is weak or lost due to the communication operator, GDU is not liable for any product damage and other issues caused by this.
- The LTE network signal is weak at high altitudes. It is recommended that the flight altitude not be higher than 120m when using the LTE backup link.
- The operating temperature of the A4G-S400 network card package is 0-40 ℃. Please do not use it in high temperature environments. For the LTE backup link, the remote controller can use Wi-Fi or a wireless dongle for access. If the wireless dongle is used to achieve connection, it is recommended to disable Wi-Fi.

Using the night navigation light component

The night navigation light is installed on the top of the aircraft to facilitate lighting at night or poorly-lit environments. Turning the night navigation on/off and causing it to blink can be controlled through the app.

Installation

Please follow the steps below to install the kit in the aircraft.

1. Remove the fuselage’s decorative cover first.
2. Fix the night navigation light on the top of the aircraft and tighten the screws.
3. Insert the power cable into the top interface of the aircraft.

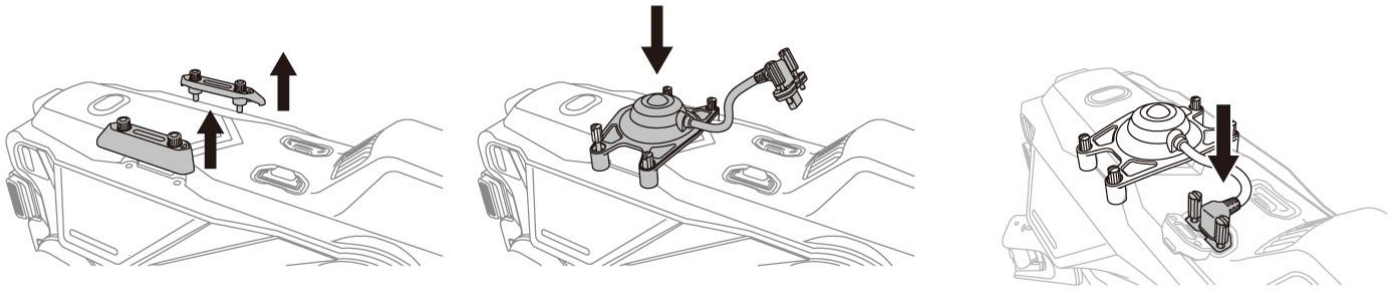

Using the FPV component

The FPV component is a camera device installed at the bottom of the S400 aircraft for fixing the direction. It can also be used with another payload.

Installation

Please follow the steps below to install the kit in the aircraft.

1. Press the payload unlocking button to remove the protective cover.
2. Align the red point on the payload interface and insert the gimbal into the installation position.
3. Rotate it by 90 °based on the direction shown on the casing to lock it.

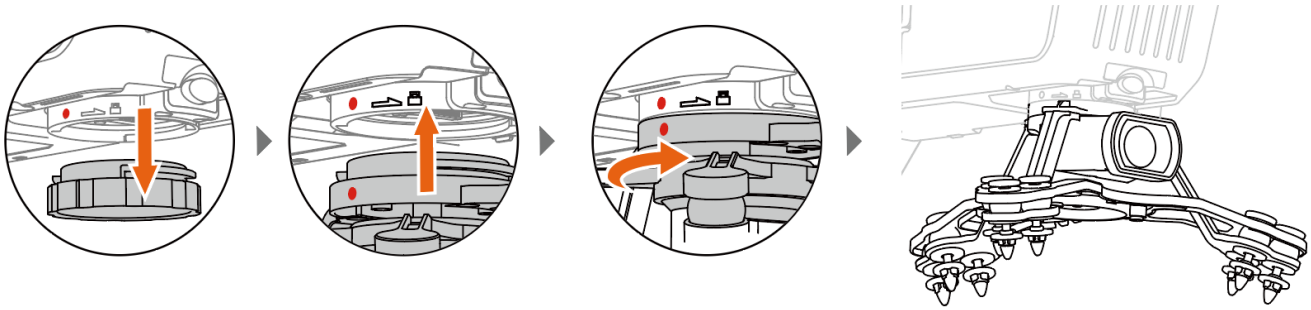

Transportation box description

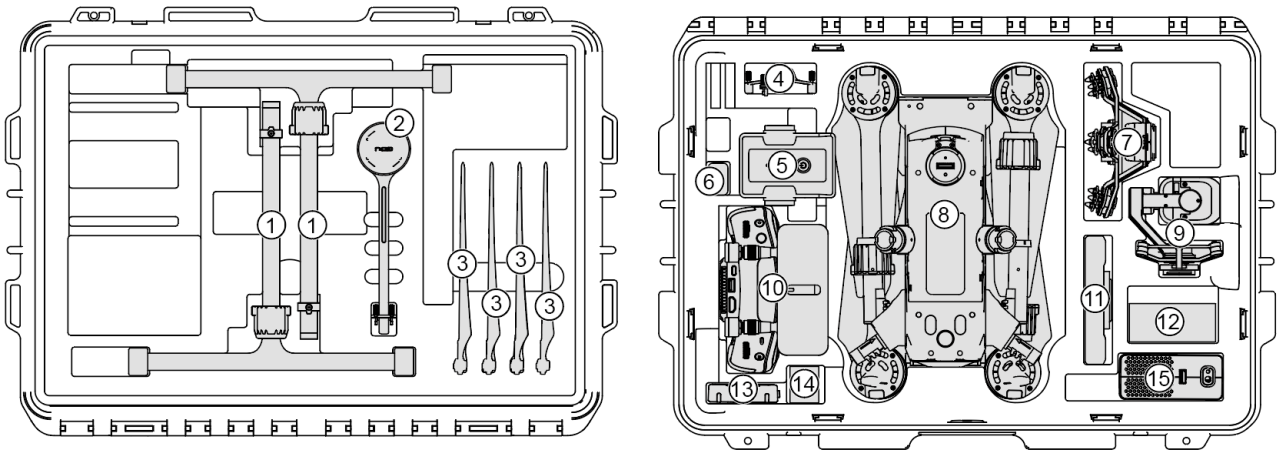

1	Landing gear	6	Card reader	11	Tablet PC
2	Rear RTK	7	FPV	12	Tool box
3	Backup propellers	8	Aircraft	13	Remote controller bracket
4	Night navigation light	9	8K gimbal	14	Remote controller neck strap

©2022 GDU Copyright Reserved

5	Aircraft battery	10	Remote controller	15	Charger

FCC Caution: Any changes or modifications not expressly approved by the party responsible for compliance could void the user's authority to operate this equipment.

This device complies with Part 15 of the FCC Rules. Operation is subject to the following two conditions:
(1) This device may not cause harmful interference, and
(2) this device must accept any interference received, including interference that may cause undesired operation.
This device and its antenna(s) must not be co-located or operating in conjunction with any other antenna or transmitter.

NOTE:
This equipment has been tested and found to comply with the limits for a Class B digital device, pursuant to Part 15 of the FCC Rules.
These limits are designed to provide reasonable protection against harmful interference in a residential installation. This equipment generates, uses and can radiate radio frequency energy and, if not installed and used in accordance with the instructions, may cause harmful interference to radio communications.
However, there is no guarantee that interference will not occur in a particular installation.
If this equipment does cause harmful interference to radio or television reception, which can be determined by turning the equipment off and on, the user is encouraged to try to correct the interference by one or more of the followingmeasures:
-- Reorient or relocate the receiving antenna.
-- Increase the separation between the equipment and receiver.
-- Connect the equipment into an outlet on a circuit different from that to which the receiver is connected.
-- Consult the dealer or an experienced radio/TV technician for help.

For Quadcopter UAV:
This equipment should be installed and operated with minimum distance 20cm between the radiator and your body.

For Remote control:
The device has been evaluated to meet general RF exposure requirements. The device can be used in portable exposure conditions without restriction.
FCC RF Exposure Information and Statement the SAR limit of USA (FCC) is1.6 W/kg averaged over one gram of this Remote control (FCC ID: 2A8WC-MGP01) has been tested against this SAR limit. SAR information on this can be viewed on-line at http://www.fcc.gov/oet/ea/fccid/. Please use the device FCC ID number for search. This device was tested for typical operations 0mm from the body. To maintain compliance with FCC RF exposure requirements, 0mm separation distance should. maintained to the user's bodies