FCC TEST REPORT

For

GDU-Tech Co., Ltd.

Light Quadcopter UAV

Test Model: S220 Pro

Prepared for	:	GDU-Tech Co., Ltd.
Address	:	Building 2, No.5, Huanglongshan South Road, Donghu New Technology Development ZoneWuhan 430074.China
Prepared by	:	Shenzhen LCS Compliance Testing Laboratory Ltd.
Address	:	101, 201 Bldg A & 301 Bldg C, Juji Industrial Park Yabianxueziwei, Shajing Street, Baoan District, Shenzhen, 518000, China
Tel	:	(+86)755-82591330
Fax	:	(+86)755-82591332
Web	:	www.LCS-cert.com
Mail	:	webmaster@LCS-cert.com
Date of receipt of test sample	:	January 21, 2025
Number of tested samples	:	2
Sample No.	:	A250120096-1, A250120096-2
Serial number	:	Prototype
Date of Test	:	January 21, 2025 ~ March 07, 2025
Date of Report	:	March 07, 2025

FCC TEST REPORT
FCC CFR 47 PART 15 E (15.407)

Report Reference No.	:	**LCSA01205078ED**
Date of Issue.....	:	March 07, 2025
Testing Laboratory Name	:	**Shenzhen LCS Compliance Testing Laboratory Ltd.**
Address.....	:	101, 201 Bldg A & 301 Bldg C, Juji Industrial Park Yabianxueziwei, Shajing Street, Baoan District, Shenzhen, 518000, China
Testing Location/ Procedure.....	:	Full application of Harmonised standards ■ Partial application of Harmonised standards □ Other standard testing method □
Applicant's Name.....	:	**GDU-Tech Co., Ltd.**
Address.....	:	Building 2, No.5, Huanglongshan South Road, Donghu New Technology Development ZoneWuhan 430074.China
Test Specification		
Standard	:	FCC CFR 47 PART 15 E (15.407)
Test Report Form No.	:	TRF-4-E-118 A/0
TRF Originator	:	Shenzhen LCS Compliance Testing Laboratory Ltd.
Master TRF.....	:	Dated 2011-03

Shenzhen LCS Compliance Testing Laboratory Ltd. All rights reserved.
This publication may be reproduced in whole or in part for non-commercial purposes as long as the Shenzhen LCS Compliance Testing Laboratory Ltd. is acknowledged as copyright owner and source of the material. Shenzhen LCS Compliance Testing Laboratory Ltd. takes no responsibility for and will not assume liability for damages resulting from the reader's interpretation of the reproduced material due to its placement and context.

EUT Description.....	:	**Light Quadcopter UAV**
Trade Mark.....	:	N/A
Test Model	:	S220 Pro
Ratings.....	:	DC 14.4V by Battery, 8000mAh
Result	:	**Positive**

Compiled by:	**Supervised by:**	**Approved by:**
Nadia Zhou	Jack Liu	Gavin Liang
Nadia Zhou/ Administrator	Jack Liu/ Technique principal	Gavin Liang/ Manager

FCC -- TEST REPORT

Test Report No. : **LCSA01205078ED**	March 07, 2025 Date of issue

EUT.....	: Light Quadcopter UAV
Test Model.....	: S220 Pro
Applicant.....	**: GDU-Tech Co., Ltd.**
Address.....	: Building 2, No.5, Huanglongshan South Road, Donghu New Technology Development ZoneWuhan 430074.China
Telephone.....	: /
Fax.....	: /
Manufacturer.....	**: GDU-Tech Co., Ltd.**
Address.....	: Building 2, No.5, Huanglongshan South Road, Donghu New Technology Development ZoneWuhan 430074.China
Telephone.....	: /
Fax.....	: /
Factory.....	**: GDU-Tech Co., Ltd.**
Address.....	: Building 2, No.5, Huanglongshan South Road, Donghu New Technology Development ZoneWuhan 430074.China
Telephone.....	: /
Fax.....	: /

Test Result:	**Positive**

The test report merely corresponds to the test sample.

It is not permitted to copy extracts of these test result without the written permission of the test laboratory.

Revision History

Report Version	Issue Date	Revision Content	Revised By
000	March 07, 2025	Initial Issue	---

TABLE OF CONTENTS

1. GENERAL INFORMATION 6
1.1. DESCRIPTION OF DEVICE (EUT) 6
1.2. SUPPORT EQUIPMENT LIST 8
1.3. EXTERNAL I/O PORT 8
1.4. DESCRIPTION OF TEST FACILITY 8
1.5. STATEMENT OF THE MEASUREMENT UNCERTAINTY 8
1.6. MEASUREMENT UNCERTAINTY 9
1.7. DESCRIPTION OF TEST MODES 9
2. TEST METHODOLOGY 10
2.1. EUT CONFIGURATION 10
2.2. EUT EXERCISE 10
2.3. GENERAL TEST PROCEDURES 10
2.4. TEST SAMPLE 10
3. SYSTEM TEST CONFIGURATION 11
3.1. JUSTIFICATION 11
3.2. EUT EXERCISE SOFTWARE 11
3.3. SPECIAL ACCESSORIES 11
3.4. BLOCK DIAGRAM/SCHEMATICS 11
3.5. EQUIPMENT MODIFICATIONS 11
3.6. TEST SETUP 11
4. SUMMARY OF TEST RESULTS 12
5. TEST RESULT 13
5.1. 6DB OCCUPIED BANDWIDTH MEASUREMENT 13
5.2. 99% OCCUPIED BANDWIDTH MEASUREMENT 14
5.3. MAXIMUM CONDUCTED OUTPUT POWER MEASUREMENT 15
5.4. POWER SPECTRAL DENSITY MEASUREMENT 17
5.5. EMISSIONS IN RESTRICTED BANDS 19
5.6. FREQUENCY STABILITY 21
5.7. ON TIME AND DUTY CYCLE 22
5.8. RADIATED EMISSIONS MEASUREMENT 23
5.9. POWER LINE CONDUCTED EMISSIONS 34
5.10. ANTENNA REQUIREMENTS 35
6. LIST OF MEASURING EQUIPMENTS 36
7. TEST SETUP PHOTOGRAPHS OF EUT 37
8. EXTERIOR PHOTOGRAPHS OF THE EUT 37
9. INTERIOR PHOTOGRAPHS OF THE EUT 37

1. GENERAL INFORMATION

1.1. Description of Device (EUT)

EUT	: Light Quadcopter UAV
Test Model	: S220 Pro
Ratings	: DC 14.4V by Battery, 8000mAh
Hardware Version	: /
Software Version	: /
2.4G SRD	:
Frequency Range	: 2412MHz~2472.5MHz
Channel Number	: 12 Channel for 10MHz bandwidth(2412MHz~2472.5MHz) 12 channels for 20MHz bandwidth(2412MHz~2472.5MHz
Channel Spacing	: 5.5MHz
Modulation Type	: OFDM (64QAM, 16QAM, QPSK, BPSK)
Antenna Description	: Antenna1: External Antenna, 1.42dBi(Max.) Antenna2: External Antenna, 0.7dBi(Max.)
5G SRD	:
Frequency Range	: 5174MHz~5240MHz
Channel Number	: 7 channels for 10MHz bandwidth(5174MHz~5240MHz) 7 channels for 20MHz bandwidth(5174MHz~5240MHz)
Channel Spacing	: 11MHz
Modulation Type	: OFDM (64QAM, 16QAM, QPSK, BPSK)
Antenna Description	: Antenna1: External Antenna, 0.21dBi(Max.) Antenna2: External Antenna, 0.62dBi(Max.)
5G SRD	:
Frequency Range	: 5744MHz~5832MHz
Channel Number	: 9 channels for 10MHz bandwidth(5744MHz~5832MHz) 9 channels for 20MHz bandwidth(5744MHz~5832MHz)
Channel Spacing	: 11MHz
Modulation Type	: OFDM (64QAM, 16QAM, QPSK, BPSK)
Antenna Description	: Antenna1: External Antenna, 1.36dBi(Max.) Antenna2: External Antenna, 3.35dBi(Max.)
5.8GWIFI	:
Frequency Range	: 5745MHz
Channel Number	: 1 channels for 20MHz bandwidth(5745MHz)
Modulation Type	: 802.11a/n: OFDM (64QAM, 16QAM, QPSK, BPSK) 802.11ac: OFDM (256QAM, 64QAM, 16QAM, QPSK, BPSK) 802.11ax: OFDMA (1024QAM, 256QAM, 64QAM, 16QAM,

QPSK, BPSK)

Antenna Description : Antenna1: External Antenna, 3.96dBi(Max.)
Antenna2: External Antenna, 4.06dBi(Max.)

Note: For a more detailed antenna description, please refer to the antenna manufacturer's specifications or the antenna report.

1.2. Support equipment List

Manufacturer	Description	Model	Serial Number	Certificate
---	---	---	---	---

1.3. External I/O Port

I/O Port Description	Quantity	Cable
Type-C USB Port	3	N/A

1.4. Description of Test Facility

NVLAP Accreditation Code is 600167-0.
FCC Designation Number is CN5024.
CAB identifier is CN0071.
CNAS Registration Number is L4595.
Test Firm Registration Number: 254912.

The 3m-Semi anechoic test site fulfils CISPR 16-1-4 according to ANSI C63.4:2014 and CISPR 16-1-4:2010 SVSWR requirement for radiated emission above 1GHz.

1.5. Statement of the Measurement Uncertainty

The data and results referenced in this document are true and accurate. The reader is cautioned that there may be errors within the calibration limits of the equipment and facilities. The measurement uncertainty was calculated for all measurements listed in this test report acc. To CISPR 16 – 4 “Specification for radio disturbance and immunity measuring apparatus and methods – Part 4: Uncertainty in EMC Measurements” and is documented in the LCS quality system acc. To DIN EN ISO/IEC 17025. Furthermore, component and process variability of devices similar to that tested may result in additional deviation. The manufacturer has the sole responsibility of continued compliance of the device.

1.6. Measurement Uncertainty

Test Item		Frequency Range	Uncertainty	Note
Radiation Uncertainty	:	9KHz~30MHz	±3.10dB	(1)
		30MHz~200MHz	±2.96dB	(1)
		200MHz~1000MHz	±3.10dB	(1)
		1GHz~26.5GHz	±3.80dB	(1)
		26.5GHz~40GHz	±3.90dB	(1)
Conduction Uncertainty	:	150kHz~30MHz	±1.63dB	(1)
Power disturbance	:	30MHz~300MHz	±1.60dB	(1)
Output power	:	1GHz-40GHz	±0.57dB	(1)
Power Spectral Density	:	1GHz-40GHz	±1.2dB	(1)
Occupied Channel Bandwidth	:	1GHz-40GHz	±5%	(1)
Conducted RF Spurious Emission	:	9kHz-40GHz	±1.80dB	(1)
Emissions in Restricted Bands	:	1GHz-40GHz	±2.47dB	(1)
Frequency Stability	:	1GHz-40GHz	±25Hz	(1)

(1). This uncertainty represents an expanded uncertainty expressed at approximately the 95% confidence level using a coverage factor of k=2.

1.7. Description of Test Modes

The EUT has been tested under operating condition.

This test was performed with EUT in X, Y, Z position and the worst case was found when EUT in X position.

Operation Frequency List WIFI:

Channel List for 802.11a/n20/ac20/ax20							
Channel	Frequency (MHz)	Channel	Frequency (MHz)	Channel	Frequency (MHz)	Channel	Frequency (MHz)
CH149	**5745**	**--**	**--**	**--**	**--**	**--**	**--**
--	**--**	**--**	**--**	**--**	**--**	**--**	**--**

2. TEST METHODOLOGY

All measurements contained in this report were conducted with ANSI C63.10-2013, American National Standard of Procedures for Compliance Testing of Unlicensed Wireless Devices.

The radiated testing was performed at an antenna-to-EUT distance of 3 meters. All radiated and conducted emissions measurement was performed at Shenzhen LCS Compliance Testing Laboratory Ltd.

2.1. EUT Configuration

The EUT configuration for testing is installed on RF field strength measurement to meet the Commissions requirement and operating in a manner that intends to maximize its emission characteristics in a continuous normal application.

2.2. EUT Exercise

The EUT was operated in the engineering mode to fix the TX frequency that was for the purpose of the measurements.

According to FCC's request, Test Procedure 789033 D02 General U-NII Test Procedures New Rules v02r01 and KDB 662911 D01 Multiple Transmitter Output v02r01 is required to be used for this kind of FCC 15.407 UII device.

According to its specifications, the EUT must comply with the requirements of the Section 15.203, 15.205, 15.207, 15.209 and 15.407 under the FCC Rules Part 15 Subpart E

2.3. General Test Procedures

2.3.1 Conducted Emissions(N/A)

The EUT is placed on the turntable, which is 0.8 m above ground plane. According to the requirements in Section 6.2.1 of ANSI C63.10-2013 Conducted emissions from the EUT measured in the frequency range between 0.15 MHz and 30MHz using Quasi-peak and average detector modes.

2.3.2 Radiated Emissions

The EUT is placed on a turn table, which is 0.8 m above ground plane below 1GHz and 1.5 m above ground plane above 1GHz. The turntable shall rotate 360 degrees to determine the position of maximum emission level. EUT is set 3m away from the receiving antenna, which varied from 1m to 4m to find out the highest emission. And also, each emission was to be maximized by changing the polarization of receiving antenna both horizontal and vertical. In order to find out the maximum emissions, exploratory radiated emission measurements were made according to the requirements in Section 6.3 of ANSI C63.10-2013.

2.4. Test Sample

The application provides 2 samples to meet requirement;

Sample Number	Description
Sample 1(A250120096-1)	Engineer sample – continuous transmit
Sample 2(A250120096-2)	Normal sample – Intermittent transmit

3. SYSTEM TEST CONFIGURATION

3.1. Justification

The system was configured for testing in a continuous transmits condition.

3.2. EUT Exercise Software

The system was configured for testing in a continuous transmits condition and change test channels by software provided by application.

3.3. Special Accessories

N/A.

3.4. Block Diagram/Schematics

Please refer to the related document

3.5. Equipment Modifications

Shenzhen LCS Compliance Testing Laboratory Ltd. has not done any modification on the EUT.

3.6. Test Setup

Please refer to the test setup photo.

4. SUMMARY OF TEST RESULTS

Applied Standard: FCC Part 15 Subpart E			
FCC Rules	Description of Test	Result	Remark
§15.407(e)	6dB Bandwidth	Compliant	Appendix D.1
§15.407(a)	Maximum Conducted Output Power	Compliant	Appendix D.2
§15.407(a)	Power Spectral Density	Compliant	Appendix D.3
§15.209, §15.407(b)	Emissions in Restricted Bands	Compliant	Appendix D.4
§15.407(g)	Frequency Stability	Compliant	Appendix D.5
/	On Time and Duty Cycle	/	Only reported; Appendix D.6
§15.209, §15.407(b)	Radiated Emissions	Compliant	Note 1
§15.207(a)	AC Conducted Emissions	N/A	N/A
§15.203	Antenna Requirements	Compliant	Note 1
§15.407 §2.1091	RF Exposure	Compliant	Note 2

Remark:
1. Note 1 – Test results inside test report;
2. Note 2 – Test results in other test report (RF Exposure Evaluation);

5. TEST RESULT

5.1. 6dB Occupied Bandwidth Measurement

5.1.1. Standard Applicable

Within the 5.725-5.85 GHz band, the minimum 6 dB bandwidth of U-NII devices shall be at least 500 kHz.

5.1.2. Measuring Instruments and Setting

Please refer to equipment list in this report. The following table is the setting of the Spectrum Analyzer.

Spectrum Parameter	Setting
Attenuation	Auto
Span	> 26dB Bandwidth
Detector	Peak
Trace	Max Hold
Sweep Time	Auto

5.1.3. Test Procedures

1. The transmitter output (antenna port) was connected to the spectrum analyzer in peak hold mode.
2. The resolution bandwidth of 100 KHz and the video bandwidth of 300 KHz were used.
3. Measured the spectrum width with power higher than 6dB below carrier.

5.1.4. Test Setup Layout

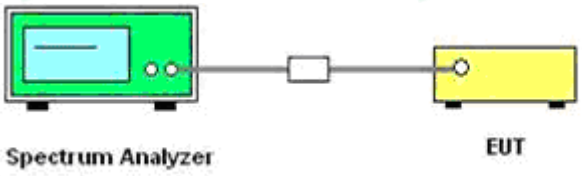

5.1.5. EUT Operation during Test

The EUT was programmed to be in continuously transmitting mode.

5.1.6. Test Result of 6dB Occupied Bandwidth

PASS.

Please refer to Appendix D.1

Remark:

1. *Measured 6dB bandwidth at difference data rate for each mode and recorded worst case for each mode.*
2. *Test results including cable loss;*
3. *Worst case data at 6Mbps at IEEE 802.11a; MCS0 at IEEE 802.11n HT20, IEEE 802.11ac VHT20, IEEE 802.11ax HEW20.*

5.2. 99% Occupied Bandwidth Measurement

5.2.1. Standard Applicable

According to §2.1049: The occupied bandwidth, that is the frequency bandwidth such that, below its lower and above its upper frequency limits, the mean powers radiated are each equal to 0.5 percent of the total mean power radiated by a given emission shall be measured under the following conditions as applicable.

5.2.2. Measuring Instruments and Setting

Please refer to equipment list in this report. The following table is the setting of the Spectrum Analyzer.

Spectrum Parameter	Setting
Attenuation	Auto
Span Frequency	> RBW
Detector	Peak
Trace	Max Hold
Sweep Time	Auto

5.2.3. Test Procedures

1. The transmitter output (antenna port) was connected to the spectrum analyzer in peak hold mode.
2. Set RBW = 1%~5% OBW; VBW≥3*RBW;
3. Measured the 99% occupied bandwidth by related function of the spectrum analyzer.

5.2.4. Test Setup Layout

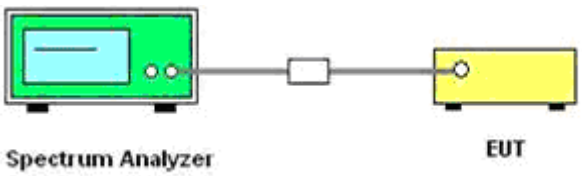

5.2.5. EUT Operation during Test

The EUT was programmed to be in continuously transmitting mode.

5.2.6. Test Result of 99% Occupied Spectrum Bandwidth

Not Applicable

5.3. Maximum Conducted Output Power Measurement

5.3.1. Standard Applicable

For 5725~5850MHz

For the band 5.725-5.85 GHz, the maximum conducted output power over the frequency band of operation shall not exceed 1 W. In addition, the maximum power spectral density shall not exceed 30 dBm in any 500-kHz band. If transmitting antennas of directional gain greater than 6 dBi are used, both the maximum conducted output power and the maximum power spectral density shall be reduced by the amount in dB that the directional gain of the antenna exceeds 6 dBi. However, fixed point-to-point U-NII devices operating in this band may employ transmitting antennas with directional gain greater than 6 dBi without any corresponding reduction in transmitter conducted power. Fixed, point-to-point operations exclude the use of point-to-multipoint systems, omnidirectional applications, and multiple collocated transmitters transmitting the same information. The operator of the U-NII device, or if the equipment is professionally installed, the installer, is responsible for ensuring that systems employing high gain directional antennas are used exclusively for fixed, point-to-point operations.

5.3.2. Measuring Instruments and Setting

Please refer to equipment list in this report. The following table is the setting of the power meter.

5.3.3. Test Procedures

The transmitter output (antenna port) was connected to the power meter.

According to KDB789033 D02 General UNII Test Procedures New Rules v02r01 Section 3 (a) Method PM (Measurement using an RF average power meter):

(i) Measurements may be performed using a wideband RF power meter with a thermocouple detector or equivalent if all of the conditions listed below are satisfied.

- The EUT is configured to transmit continuously or to transmit with a constant duty cycle.
- At all times when the EUT is transmitting, it must be transmitting at its maximum power control level.
- The integration period of the power meter exceeds the repetition period of the transmitted signal by at least a factor of five.

(ii) If the transmitter does not transmit continuously, measure the duty cycle, x, of the transmitter output signal as described in section II.B.

(iii) Measure the average power of the transmitter. This measurement is an average over both the on and off periods of the transmitter.

5.3.4. Test Setup Layout

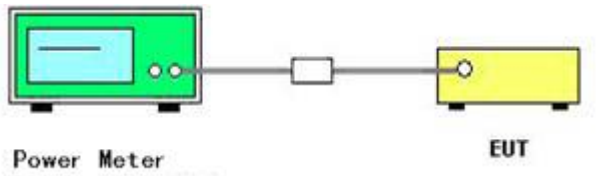

5.3.5. EUT Operation during Test

The EUT was programmed to be in continuously transmitting mode.

5.3.6. Test Result of Maximum Conducted Output Power

Limits

Mode	Antenna 1 Gain (dBi)	Antenna 2 Gain (dBi)	Directional Gain (dBi)	Power Limit (dBm)
IEEE 802.11a	3.96	4.06	/	30
IEEE 802.11n/ac/ax MIMO	3.96	4.06	4.06	30

PASS

Please refer to Appendix D.2

Remark:

1. *Measured output power at difference data rate for each mode and recorded worst case for each mode.*
2. *Test results including cable loss;*
3. *Worst case data at 6Mbps at IEEE 802.11a; MCS0 at IEEE 802.11n HT20, IEEE 802.11ac VHT20, IEEE 802.11ax HEW20.*
   Report conducted power = Measured conducted average power + Duty Cycle factor;

5.4. Power Spectral Density Measurement

5.4.1. Standard Applicable

For 5725~5850MHz

For the band 5.725-5.85 GHz, the maximum conducted output power over the frequency band of operation shall not exceed 1 W. In addition, the maximum power spectral density shall not exceed 30 dBm in any 500-kHz band. If transmitting antennas of directional gain greater than 6 dBi are used, both the maximum conducted output power and the maximum power spectral density shall be reduced by the amount in dB that the directional gain of the antenna exceeds 6 dBi. However, fixed point-to-point U-NII devices operating in this band may employ transmitting antennas with directional gain greater than 6 dBi without any corresponding reduction in transmitter conducted power. Fixed, point-to-point operations exclude the use of point-to-multipoint systems, omnidirectional applications, and multiple collocated transmitters transmitting the same information. The operator of the U-NII device, or if the equipment is professionally installed, the installer, is responsible for ensuring that systems employing high gain directional antennas are used exclusively for fixed, point-to-point operations.

5.4.2. Measuring Instruments and Setting

Please refer to equipment list in this report. The following table is the setting of Spectrum Analyzer.

5.4.3. Test Procedures

1). The transmitter was connected directly to a Spectrum Analyzer through a directional couple.
2). The power was monitored at the coupler port with a Spectrum Analyzer. The power level was set to the maximum level.
3). Set the RBW = 510 kHz
4). Set the VBW ≥ 3*RBW
5). Span=Encompass the entire emissions bandwidth (EBW) of the signal
6). Detector = RMS.
7). Sweep time = auto couple.
8). Trace mode = max hold.
9). Allow trace to fully stabilize.
10). If measurement bandwidth of Maximum PSD is specified in 500 kHz, add 10 log (500 kHz/RBW) to the measured result, whereas RBW (<500 kHz) is the reduced resolution bandwidth of the spectrum analyzer set during measurement.
11). If measurement bandwidth of Maximum PSD is specified in 1 MHz, add 10 log (1MHz/RBW) to the measured result, whereas RBW (< 1 MHz) is the reduced resolution bandwidth of spectrum analyzer set during measurement.
12). Care must be taken to ensure that the measurements are performed during a period of continuous transmission or are corrected upward for duty cycle.

5.4.4. Test Setup Layout

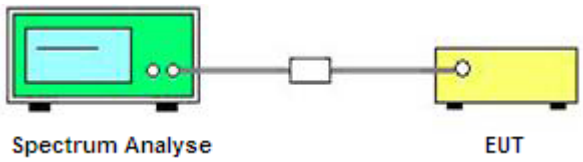

5.4.5. EUT Operation during Test

The EUT was programmed to be in continuously transmitting mode.

5.4.6. Test Result of Power Spectral Density

Limits

Mode	Antenna 1 Gain (dBi)	Antenna 2 Gain (dBi)	Directional Gain (dBi)	Power Limit (dBm)
IEEE 802.11a	3.96	4.06	/	30
IEEE 802.11n/ac/ax MIMO	3.96	4.06	7.02	28.98

PASS.

Please refer to Appendix D.3

Remark:

1. *Measured power spectrum density at difference data rate for each mode and recorded worst case for each mode.*
2. *Test results including cable loss;*
3. *Worst case data at 6Mbps at IEEE 802.11a; MCS0 at IEEE 802.11n HT20, IEEE 802.11ac VHT20, IEEE 802.11ax HEW20.*
4. *Report conducted PSD = measured conducted PSD + Duty Cycle factor + RBW factor;*
5. *RBW factor = 10 log (500 KHz / 510 KHz) = -0.086 dB;*

5.5. Emissions in Restricted Bands

5.5.1 Limit

According to §15.407 (b) Undesirable emission limits. Except as shown in paragraph (b) (7) of this section, the maximum emissions outside of the frequency bands of operation shall be attenuated in accordance with the following limits:

(a) For transmitters operating in the 5.15-5.25 GHz band: All emissions outside of the 5.15-5.35 GHz band shall not exceed an e.i.r.p. of −27 dBm/MHz.

(b) For transmitters operating in the 5.25-5.35 GHz band: All emissions outside of the 5.15-5.35 GHz band shall not exceed an e.i.r.p. of −27 dBm/MHz.

(c) For transmitters operating in the 5.47-5.725 GHz band: All emissions outside of the 5.47-5.725 GHz band shall not exceed an e.i.r.p. of −27 dBm/MHz.

(d) For transmitters operating in the 5.725-5.85 GHz band:

(i) All emissions shall be limited to a level of −27 dBm/MHz at 75 MHz or more above or below the band edge increasing linearly to 10 dBm/MHz at 25 MHz above or below the band edge, and from 25 MHz above or below the band edge increasing linearly to a level of 15.6 dBm/MHz at 5 MHz above or below the band edge, and from 5 MHz above or below the band edge increasing linearly to a level of 27 dBm/MHz at the band edge.

(ii) Devices certified before March 2, 2017 with antenna gain greater than 10 dBi may demonstrate compliance with the emission limits in §15.247(d), but manufacturing, marketing and importing of devices certified under this alternative must cease by March 2, 2018. Devices certified before March 2, 2018 with antenna gain of 10 dBi or less may demonstrate compliance with the emission limits in §15.247(d), but manufacturing, marketing and importing of devices certified under this alternative must cease before March 2, 2020.

(e) The emission measurements shall be performed using a minimum resolution bandwidth of 1 MHz. A lower resolution bandwidth may be employed near the band edge, when necessary, provided the measured energy is integrated to show the total power over 1 MHz.

(f) Unwanted emissions below 1 GHz must comply with the general field strength limits set forth in §15.209. Further, any U-NII devices using an AC power line are required to comply also with the conducted limits set forth in §15.207.

(g) The provisions of §15.205 apply to intentional radiators operating under this section.

(h) When measuring the emission limits, the nominal carrier frequency shall be adjusted as close to the upper and lower frequency band edges as the design of the equipment permits.

5.5.2 Test Configuration

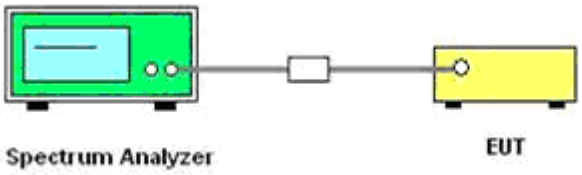

5.5.3 Test Procedure

1. The power was monitored at the coupler port with a Spectrum Analyzer. The power level was set to the maximum level.
2. Set the RBW = 1MHz.
3. Set the VBW ≥ 3MHz
4. Number of points in sweep ≥ 2 × span / RBW. (This ensures that bin-to-bin spacing is ≤ RBW/2, so that narrowband signals are not lost between frequency bins.)
5. Manually set sweep time ≥ 10 × (number of points in sweep) × (total on/off period of the transmitted signal).
6. Set detector = power averaging (rms).
7. Sweep time = auto couple.
8. Trace mode = max hold.
9. Allow trace to fully stabilize.

5.5.4 Test Results

PASS

Please refer to Appendix D.4

Remark:

1. *Measured unwanted emission at difference data rate for each mode and recorded worst case for each mode;*
2. *Test results including cable loss;*
3. *Worst case data at 6Mbps at IEEE 802.11a; MCS0 at IEEE 802.11n HT20, IEEE 802.11ac VHT20, IEEE 802.11ax HEW20.*
4. *E.I.R.P = Conducted power + Antenna Gain;*
5. *EIRP calculation. A value representative of an upper bound on out-of-band antenna gain (in dBi) shall be added to the measured antenna-port conducted emission power to compute EIRP within the specified measurement bandwidth. (For emissions in the restricted bands, additional calculations are required to convert EIRP to field strength at the specified distance.) The upper bound on antenna gain for a device with a single RF output shall be selected as the maximum in-band gain of the antenna across all operating bands or 2 dBi, whichever is greater.3 However, for devices that operate in multiple bands using the same transmit antenna, the highest gain of the antenna within the operating band nearest to the out-of-band frequency being measured may be used in lieu of the overall highest gain when measuring emissions at frequencies within 20% of the absolute frequency at the nearest edge of that band, but in no case shall a value less than 2 dBi be selected;*
6. *Over limit = EIRP – Limit;*

5.6. Frequency Stability

5.6.1 Standard Applicable

According to FCC §15.407(g) “Manufacturers of U-NII devices are responsible for ensuring frequency stability such that an emission is maintained within the band of operation under all conditions of normal operation as specified in the users manual.”

According to FCC §2.1055(a) “The frequency stability shall be measured with variation of ambient temperature as follows:”

(1) From −30° to + 50° centigrade for all equipment except that specified in paragraphs (a) (2) and (3) of this section.

(2) From −20° to + 50° centigrade for equipment to be licensed for use in the Maritime Services under part 80 of this chapter, except for Class A, B, and S Emergency Position Indicating Radiobeacons (EPIRBS), and equipment to be licensed for use above 952 MHz at operational fixed stations in all services, stations in the Local Television Transmission Service and Point-to-Point Microwave Radio Service under part 21 of this chapter, equipment licensed for use aboard aircraft in the Aviation Services under part 87 of this chapter, and equipment authorized for use in the Family Radio Service under part 95 of this chapter.

(3) From 0° to + 50° centigrade for equipment to be licensed for use in the Radio Broadcast Services under part 73 of this chapter.

5.6.2 Test Configuration

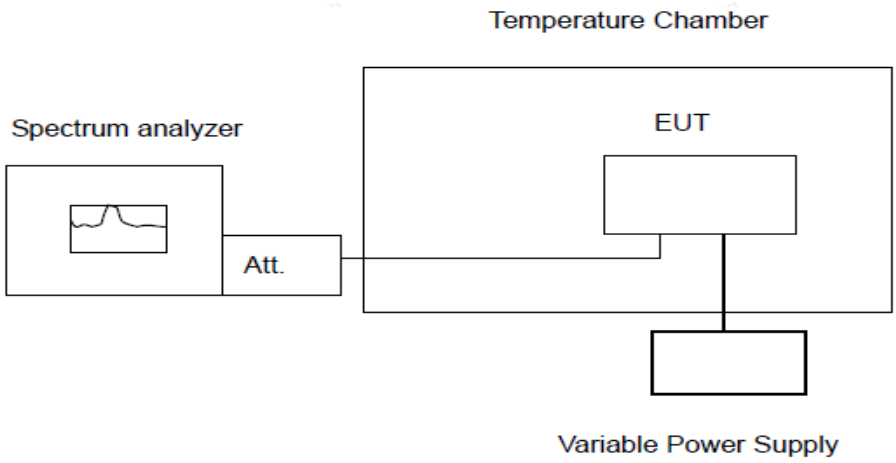

5.6.3 Test Procedure

The equipment under test was connected to an external AC or DC power supply and input rated voltage. RF output was connected to a frequency counter or spectrum anzlyer via feed through attenators. The EUT was placed inside the temperature chamber. Set the spectrum analyzer RBW low engouh to obtain the desired frequency resoluation and measure EUT 20 degree operating frequency as reference frequency. Turn EUT off and set the chamber temperature to -30 degree. After the temperature stabilized for approximately 30 minutes recorded the frequency. Repeat step measure wuth 10 degree increased per stage until the highest temperature of +50 degree reached.

5.6.4 Test Results

PASS

Please refer to Appendix D.5

5.7. On Time and Duty Cycle

5.7.1. Standard Applicable

None; for reporting purpose only.

5.7.2. Measuring Instruments and Setting

Please refer to equipment list in this report. The following table is the setting of the spectrum analyzer.

5.7.3. Test Procedures

1. Set the Centre frequency of the spectrum analyzer to the transmitting frequency;
2. Set the span=0MHz, RBW=8MHz, VBW=8.0MHz, Sweep time=Auto;
3. Detector = peak;
4. Trace mode = Single hold.

5.7.4. Test Setup Layout

5.7.5. EUT Operation during Test

The EUT was programmed to be in continuously transmitting mode.

5.7.6. Test result

For reporting purpose only.

Please refer to Appendix D.6

5.8. Radiated Emissions Measurement

5.8.1. Standard Applicable

15.205 (a) Except as shown in paragraph (d) of this section, only spurious emissions are permitted in any of the frequency bands listed below:

MHz	MHz	MHz	GHz
0.090-0.110	16.42-16.423	399.9-410	4.5-5.15
\1\ 0.495-0.505	16.69475-16.69525	608-614	5.35-5.46
2.1735-2.1905	16.80425-16.80475	960-1240	7.25-7.75
4.125-4.128	25.5-25.67	1300-1427	8.025-8.5
4.17725-4.17775	37.5-38.25	1435-1626.5	9.0-9.2
4.20725-4.20775	73-74.6	1645.5-1646.5	9.3-9.5
6.215-6.218	74.8-75.2	1660-1710	10.6-12.7
6.26775-6.26825	108-121.94	1718.8-1722.2	13.25-13.4
6.31175-6.31225	123-138	2200-2300	14.47-14.5
8.291-8.294	149.9-150.05	2310-2390	15.35-16.2
8.362-8.366	156.52475-156.52525	2483.5-2500	17.7-21.4
8.37625-8.38675	156.7-156.9	2690-2900	22.01-23.12
8.41425-8.41475	162.0125-167.17	3260-3267	23.6-24.0
12.29-12.293.	167.72-173.2	3332-3339	31.2-31.8
12.51975-12.52025	240-285	3345.8-3358	36.43-36.5
12.57675-12.57725	322-335.4	3600-4400	(\2\)
13.36-13.41			

\1\ Until February 1, 1999, this restricted band shall be 0.490-0.510 MHz.
\2\ Above 38.6

For transmitters operating in the 5.725-5.85 GHz band:

All emissions shall be limited to a level of −27 dBm/MHz(68.2dBuV/m at 3m) at 75 MHz or more above or below the band edge increasing linearly to 10 dBm/MHz(105.2dBuV/m at 3m) at 25 MHz above or below the band edge, and from 25 MHz above or below the band edge increasing linearly to a level of 15.6(110.8dBuV/m at 3m) dBm/MHz at 5 MHz above or below the band edge, and from 5 MHz above or below the band edge increasing linearly to a level of 27 dBm/MHz(122.2dBuV/m at 3m) at the band edge.

In addition, In case the emission fall within the restricted band specified on 15.205(a), then the 15.209(a) limit in the table below has to be followed.

Frequencies (MHz)	Field Strength (microvolts/meter)	Measurement Distance (meters)
0.009~0.490	2400/F(KHz)	300
0.490~1.705	24000/F(KHz)	30
1.705~30.0	30	30
30~88	100	3
88~216	150	3
216~960	200	3
Above 960	500	3

5.8.2. Measuring Instruments and Setting

Please refer to equipment list in this report. The following table is the setting of spectrum analyzer and receiver.

Spectrum Parameter	Setting
Attenuation	Auto
Start Frequency	1000 MHz
Stop Frequency	10th carrier harmonic
RB / VB (Emission in restricted band)	1MHz / 1MHz for Peak, 1 MHz / 1/B kHz for Average
RB / VB (Emission in non-restricted band)	1MHz / 1MHz for Peak, 1 MHz / 1/B kHz for Average

Receiver Parameter	Setting
Attenuation	Auto
Start ~ Stop Frequency	9kHz~150kHz / RB/VB 200Hz/1KHz for QP/AVG
Start ~ Stop Frequency	150kHz~30MHz / RB/VB 9kHz/30KHz for QP/AVG
Start ~ Stop Frequency	30MHz~1000MHz / RB/VB 120kHz/1MHz for QP

5.8.3. Test Procedures

1) Sequence of testing 9 kHz to 30 MHz

Setup:

--- The equipment was set up to simulate a typical usage like described in the user manual or described by manufacturer.

--- If the EUT is a tabletop system, a rotatable table with 0.8 m height is used.

--- If the EUT is a floor standing device, it is placed on the ground.

--- Auxiliary equipment and cables were positioned to simulate normal operation conditions.

--- The AC power port of the EUT (if available) is connected to a power outlet below the turntable.

--- The measurement distance is 3 meter.

--- The EUT was set into operation.

Premeasurement:

--- The turntable rotates from 0° to 315° using 45° steps.

--- The antenna height is 1.0 meter.

--- At each turntable position the analyzer sweeps with peak detection to find the maximum of all emissions

Final measurement:

--- Identified emissions during the premeasurement the software maximizes by rotating the turntable position (0° to 360°) and by rotating the elevation axes (0° to 360°).

--- The final measurement will be done in the position (turntable and elevation) causing the highest emissions with QPK detector.

--- The final levels, frequency, measuring time, bandwidth, turntable position, correction factor, margin to the limit and limit will be recorded. Also a plot with the graph of the premeasurement and the limit will be stored.

2) Sequence of testing 30 MHz to 1 GHz

Setup:

--- The equipment was set up to simulate a typical usage like described in the user manual or described by manufacturer.

--- If the EUT is a tabletop system, a table with 0.8 m height is used, which is placed on the ground plane.

--- If the EUT is a floor standing device, it is placed on the ground plane with insulation between both.

--- Auxiliary equipment and cables were positioned to simulate normal operation conditions

--- The AC power port of the EUT (if available) is connected to a power outlet below the turntable.

--- The measurement distance is 3 meter.

--- The EUT was set into operation.

Premeasurement:

--- The turntable rotates from 0° to 315° using 45° steps.

--- The antenna is polarized vertical and horizontal.

--- The antenna height changes from 1 to 3 meter.

--- At each turntable position, antenna polarization and height the analyzer sweeps three times in peak to find the maximum of all emissions.

Final measurement:

--- The final measurement will be performed with minimum the six highest peaks.

--- According to the maximum antenna and turntable positions of premeasurement the software maximize the peaks by changing turntable position (± 45°) and antenna movement between 1 and 4 meter.

--- The final measurement will be done with QP detector with an EMI receiver.

--- The final levels, frequency, measuring time, bandwidth, antenna height, antenna polarization, turntable angle, correction factor, margin to the limit and limit will be recorded. Also a plot with the graph of the premeasurement with marked maximum final measurements and the limit will be stored.

3) Sequence of testing 1 GHz to 18 GHz

Setup:

--- The equipment was set up to simulate a typical usage like described in the user manual or described by manufacturer.

--- If the EUT is a tabletop system, a rotatable table with 1.5 m height is used.

--- If the EUT is a floor standing device, it is placed on the ground plane with insulation between both.

--- Auxiliary equipment and cables were positioned to simulate normal operation conditions

--- The AC power port of the EUT (if available) is connected to a power outlet below the turntable.

--- The measurement distance is 3 meter.

--- The EUT was set into operation.

Premeasurement:

--- The turntable rotates from 0° to 315° using 45° steps.

--- The antenna is polarized vertical and horizontal.

--- The antenna height scan range is 1 meter to 2.5 meter.

--- At each turntable position and antenna polarization the analyzer sweeps with peak detection to find the maximum of all emissions.

Final measurement:

--- The final measurement will be performed with minimum the six highest peaks.

--- According to the maximum antenna and turntable positions of premeasurement the software maximize the peaks by changing turntable position (± 45°) and antenna movement between 1 and 4 meter. This procedure is repeated for both antenna polarizations.

--- The final measurement will be done in the position (turntable, EUT-table and antenna polarization) causing the highest emissions with Peak and Average detector.

--- The final levels, frequency, measuring time, bandwidth, turntable position, EUT-table position, antenna polarization, correction factor, margin to the limit and limit will be recorded. Also a plot with the graph of the premeasurement with marked maximum final measurements and the limit will be stored.

4) Sequence of testing above 18 GHz

Setup:

--- The equipment was set up to simulate a typical usage like described in the user manual or described by manufacturer.

--- If the EUT is a tabletop system, a rotatable table with 1.5 m height is used.

--- If the EUT is a floor standing device, it is placed on the ground plane with insulation between both.

--- Auxiliary equipment and cables were positioned to simulate normal operation conditions

--- The AC power port of the EUT (if available) is connected to a power outlet below the turntable.

--- The measurement distance is 1 meter.

--- The EUT was set into operation.

Premeasurement:

--- The antenna is moved spherical over the EUT in different polarizations of the antenna.

Final measurement:

--- The final measurement will be performed at the position and antenna orientation for all detected emissions that were found during the premeasurements with Peak and Average detector.

--- The final levels, frequency, measuring time, bandwidth, correction factor, margin to the limit and limit will be recorded. Also a plot with the graph of the premeasurement and the limit will be stored.

5.8.4. Test Setup Layout

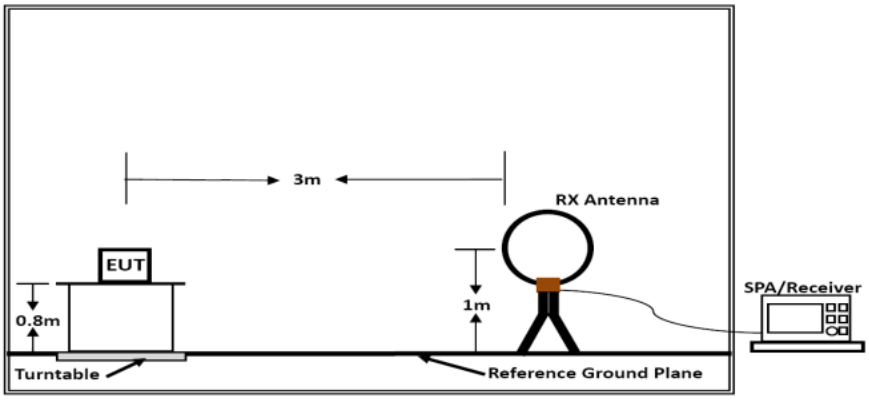

Below 30MHz

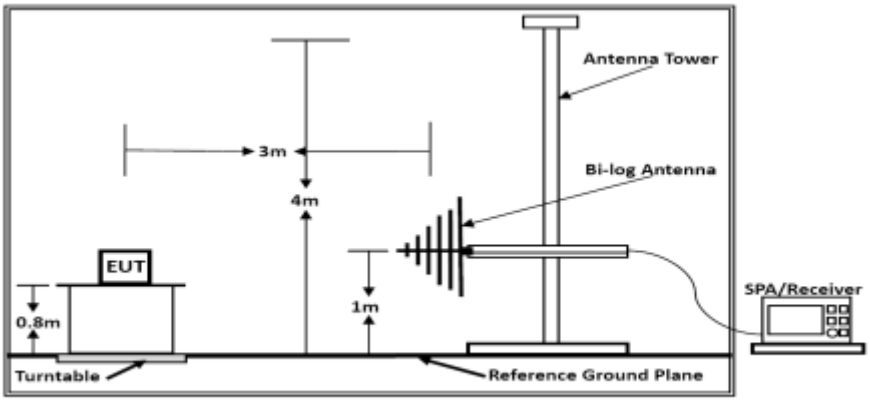

Below 1GHz

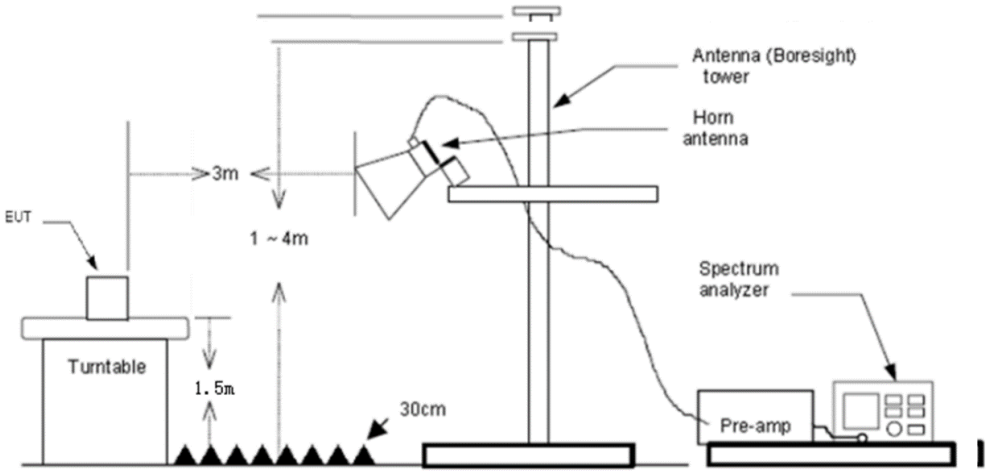

Above 18 GHz shall be extrapolated to the specified distance using an extrapolation factor of 20 dB/decade form 3m to 1m.

5.8.5. EUT Operation during Test

The EUT was programmed to be in continuously transmitting mode.

5.8.6. Field Strength Calculation

The field strength is calculated by adding the Antenna Factor and Cable Factor and subtracting the Amplifier Gain and Duty Cycle Correction Factor (if any) from the measured reading. The basic equation with a sample calculation is as follows:

FS (dBuV/m) = RA (dBuV) + AF (dB/m) + CL (dB) – AG (dB)

Where FS = Field Strength	CL = Cable Attenuation Factor (Cable Loss)
RA = Reading Amplitude	AG = Amplifier Gain
AF = Antenna Factor	

5.8.7. Results of Radiated Emissions (9 KHz~30 MHz)

Temperature	23.8℃	Humidity	52.1%
Test Engineer	Jose Zhu	Configurations	IEEE 802.11a/n/ac

Freq. (MHz)	Level (dBuV)	Over Limit (dB)	Over Limit (dB)	Remark
-	-	-	-	See Note

Note:

The amplitude of spurious emissions which are attenuated by more than 20 dB below the permissible value has no need to be reported.

Distance extrapolation factor = 40 log (specific distance / test distance) (dB);
Limit line = specific limits (dBuV) + distance extrapolation factor.

5.8.9. Results of Radiated Emissions (30 MHz~1 GHz)

Temperature	23.8℃	Humidity	52.1%
Test Engineer	Jose Zhu	Configurations	IEEE 802.11a/n/ac

PASS.

The test data please refer to following page.

Horizontal

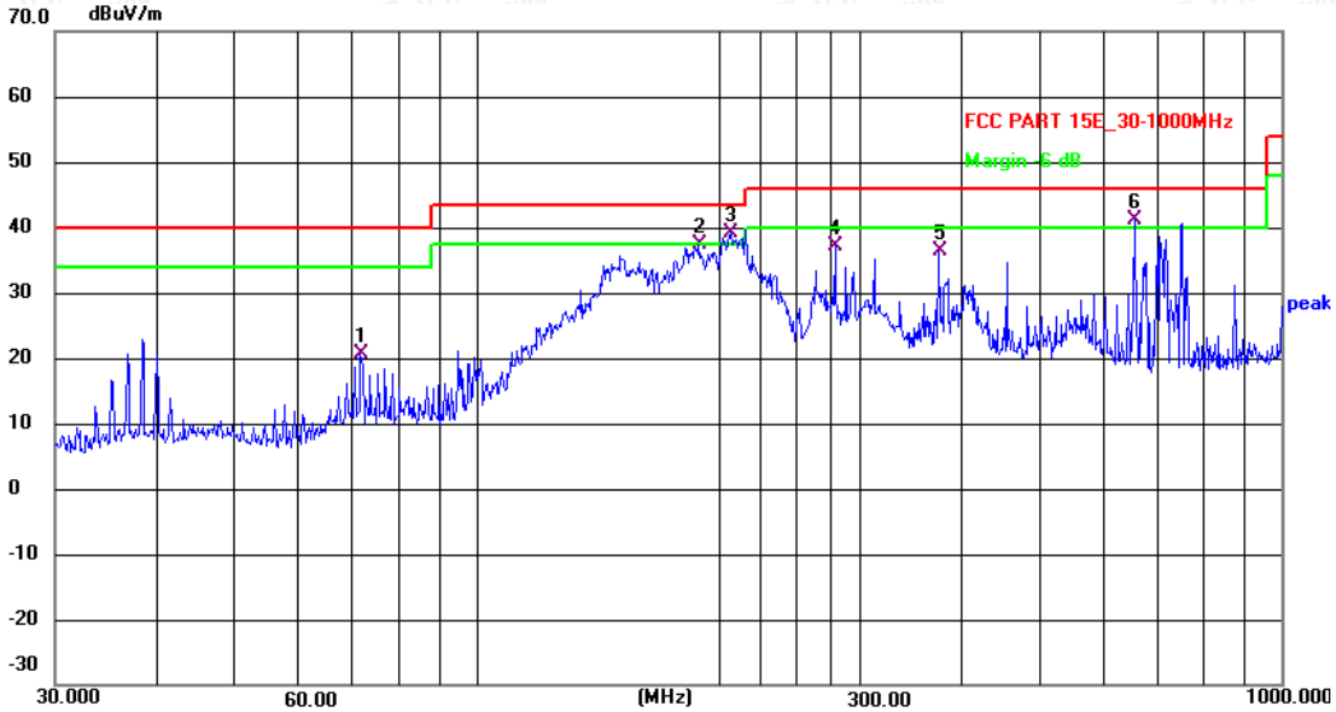

No.	Frequency (MHz)	Reading (dBuV)	Factor (dB/m)	Level (dBuV/m)	Limit (dBuV/m)	Margin (dB)	Detector
1	71.8320	39.87	-19.23	20.64	40.00	-19.36	QP
2	189.0743	57.14	-19.79	37.35	43.50	-6.15	QP
3	207.1225	57.36	-18.31	39.05	43.50	-4.45	QP
4	279.0436	53.26	-16.25	37.01	46.00	-8.99	QP
5	375.9385	50.21	-13.82	36.39	46.00	-9.61	QP
6	656.5300	51.32	-10.16	41.16	46.00	-4.84	QP

Vertical

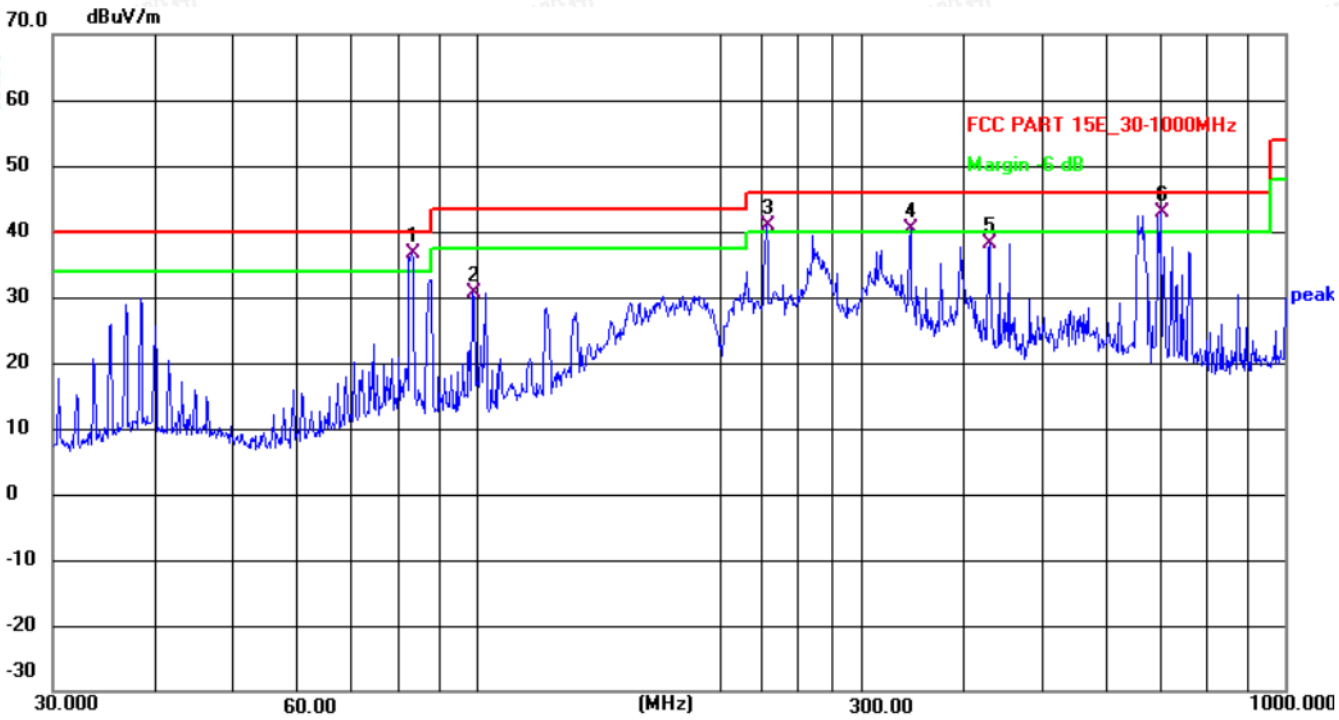

No.	Frequency (MHz)	Reading (dBuV)	Factor (dB/m)	Level (dBuV/m)	Limit (dBuV/m)	Margin (dB)	Detector
1	83.2298	56.09	-19.56	36.53	40.00	-3.47	QP
2	99.1797	48.99	-18.24	30.75	43.50	-12.75	QP
3	228.4904	57.44	-16.59	40.85	46.00	-5.15	QP
4	344.3855	55.03	-14.72	40.31	46.00	-5.69	QP
5	431.0315	52.59	-14.44	38.15	46.00	-7.85	QP
6	701.7610	53.81	-10.89	42.92	46.00	-3.08	QP

Note:

1). Pre-scan all modes and recorded the worst case results in this report.
2). Emission level (dBuV/m) = 20 log Emission level (uV/m).
3). Level = Reading + Factor, Margin = Level – Limit, Factor = Antenna Factor + Cable Loss - Preamp Factor

5.8.10. Results for Radiated Emissions (1 – 40 GHz)

Note: All the modes have been tested and recorded worst mode in the report.

IEEE 802.11a Worst Mode Antenna1

Channel 1 / 5745 MHz

Freq GHz	Read Level dBuV	Ant. Fac dB/m	Pre. Fac dB	Cab.Los dB	Measured Level dBuV	Limit Line dBuV/m	Over limit dB	Remark	Pol/Phase
17.235	41.31	33.21	35.82	9.52	48.22	68.20	-19.98	Peak	Horizontal
17.235	38.37	33.21	35.82	9.52	45.28	54.00	-8.72	Average	Horizontal
17.235	50.17	32.82	35.82	9.52	56.69	68.20	-11.51	Peak	Vertical
17.235	36.16	32.82	35.82	9.52	42.68	54.00	-11.32	Average	Vertical

IEEE 802.11n HT20 MIMO

Channel 1 / 5745 MHz

Freq GHz	Read Level dBuV	Ant. Fac dB/m	Pre. Fac dB	Cab.Los dB	Measured Level dBuV	Limit Line dBuV/m	Over limit dB	Remark	Pol/Phase
17.235	46.16	33.21	35.82	9.52	53.07	68.20	-15.13	Peak	Horizontal
17.235	36.13	33.21	35.82	9.52	43.04	54.00	-10.96	Average	Horizontal
17.235	50.64	32.82	35.82	9.52	57.16	68.20	-11.04	Peak	Vertical
17.235	38.95	32.82	35.82	9.52	45.47	54.00	-8.53	Average	Vertical

IEEE 802.11ac VHT20 MIMO

Channel 1 / 5745 MHz

Freq GHz	Read Level dBuV	Ant. Fac dB/m	Pre. Fac dB	Cab.Los dB	Measured Level dBuV	Limit Line dBuV/m	Over limit dB	Remark	Pol/Phase
17.235	44.78	33.21	35.82	9.52	51.69	68.20	-16.51	Peak	Horizontal
17.235	35.68	33.21	35.82	9.52	42.59	54.00	-11.41	Average	Horizontal
17.235	40.12	32.82	35.82	9.52	46.64	68.20	-21.56	Peak	Vertical
17.235	28.96	32.82	35.82	9.52	35.48	54.00	-18.52	Average	Vertical

IEEE 802.11ax HEW20 MIMO

Channel 1 / 5745 MHz

Freq GHz	Read Level dBuV	Ant. Fac dB/m	Pre. Fac dB	Cab.Los dB	Measured Level dBuV	Limit Line dBuV/m	Over limit dB	Remark	Pol/Phase
17.235	43.29	33.21	35.82	9.52	50.20	68.20	-18.00	Peak	Horizontal
17.235	30.31	33.21	35.82	9.52	37.22	54.00	-16.78	Average	Horizontal
17.235	47.87	32.82	35.82	9.52	54.39	68.20	-13.81	Peak	Vertical
17.235	36.82	32.82	35.82	9.52	43.34	54.00	-10.66	Average	Vertical

Notes:

1). Measuring frequencies from 9 KHz ~ 40 GHz, at least have 20dB margin found between lowest internal used/generated frequency to 30MHz.
2). Radiated emissions measured in frequency range from 9 KHz ~ 40 GHz were made with an instrument using Peak detector mode.
3). 18~40GHz at least have 20dB margin. No recording in the test report.
4). Worst case data at 6Mbps at IEEE 802.11a; MCS0 at IEEE 802.11n HT20, IEEE 802.11ac VHT20, IEEE 802.11ax HEW20.
5). Data of measurement within this frequency range shown "---" in the table above means the reading of emissions are attenuated more than 20dB below the permissible limits or the field strength is too small to be measured.

6). Measured Level = Reading Level + Factor, Over = Measured Level – Limit, Factor = Antenna Factor + Cable Loss - Preamp Factor.

5.9. Power Line Conducted Emissions

5.9.1 Standard Applicable

According to §15.207 (a): For an intentional radiator which is designed to be connected to the public utility (AC) power line, the radio frequency voltage that is conducted back onto the AC power line on any frequency or frequencies within the band 150 kHz to 30 MHz shall not exceed 250 microvolts (The limit decreases linearly with the logarithm of the frequency in the range 0.15 MHz to 0.50 MHz). The limits at specific frequency range are listed as follows:

Frequency Range (MHz)	Limits (dBμV)	
	Quasi-peak	Average
0.15 to 0.50	66 to 56*	56 to 46*
0.50 to 5	56	46
5 to 30	60	50

* Decreasing linearly with the logarithm of the frequency

5.9.2 Block Diagram of Test Setup

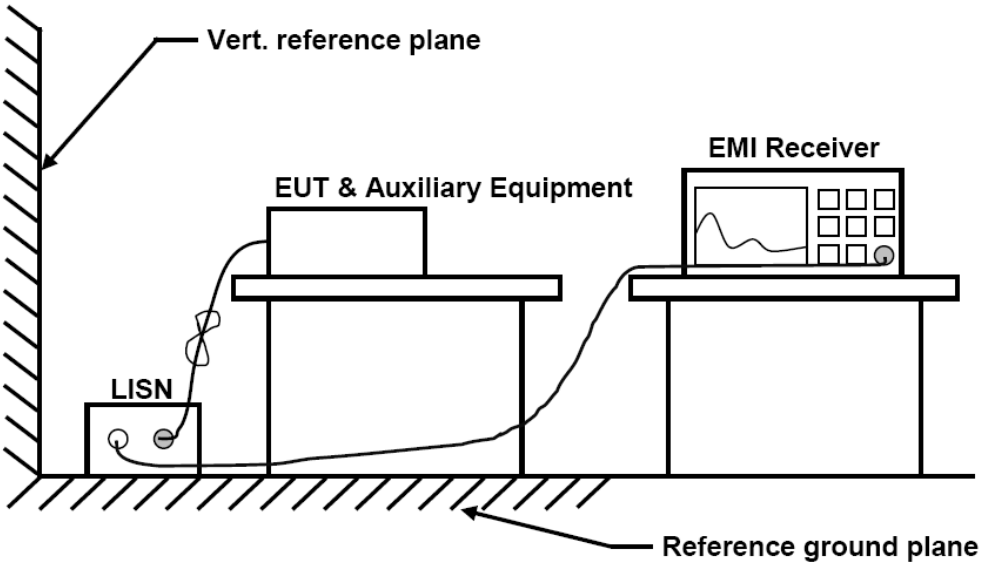

5.9.3 Disturbance Calculation

The AC mains conducted disturbance is calculated by adding the 10dB Pulse Limiter and Cable Factor and Duty Cycle Correction Factor (if any) from the measured reading. The basic equation with a sample calculation is as follows:

CD (dBuV) = RA (dBuV) + PL (dB) + CL (dB)

Where CD = Conducted Disturbance	CL = Cable Attenuation Factor (Cable Loss)
RA = Reading Amplitude	PL = 10 dB Pulse Limiter Factor

5.9.4 Test Results

Not applicable

The product is DC powered

5.10. Antenna Requirements

5.10.1 Standard Applicable

For intentional device, according to FCC 47 CFR Section 15.203:

An intentional radiator shall be designed to ensure that no antenna other than that furnished by the responsible party shall be used with the device. The use of a permanently attached antenna or of an antenna that uses a unique coupling to the intentional radiator, the manufacturer may design the unit so that a broken antenna can be replaced by the user, but the use of a standard antenna jack or electrical connector is prohibited

And according to FCC 47 CFR Section 15.407 (a), if transmitting antennas of directional gain greater than 6dBi are used, the power shall be reduced by the amount in dB that the directional gain of the antenna exceeds 6dBi.

5.10.2 Antenna Connected Construction

5.10.2.1. Standard Applicable

According to § 15.203 & RSS-Gen, an intentional radiator shall be designed to ensure that no antenna other than that furnished by the responsible party shall be used with the device.

5.10.2.2. Antenna Connector Construction

The gains of antenna used for transmitting is 3.96dBi(Max.) for Antenna1 and 4.06dBi(Max.) for Antenna2, and the antenna is External Antenna connect to PCB board and no consideration of replacement. Please see EUT photo for details, meet 15.203 & RSS-Gen antenna requirement.

6. LIST OF MEASURING EQUIPMENTS

Item	Equipment	Manufacturer	Model No.	Serial No.	Cal Date	Due Date
1	Power Meter	R&S	NRVS	100444	2024-06-06	2025-06-05
2	Power Sensor	R&S	NRV-Z81	100458	2024-06-06	2025-06-05
3	Power Sensor	R&S	NRV-Z32	10057	2024-06-06	2025-06-05
4	Test Software	Tonscend	JS1120-2	/	N/A	N/A
5	RF Control Unit	Tonscend	JS0806-2	N/A	2024-11-08	2025-11-07
6	MXA Signal Analyzer	Agilent	N9020A	MY50510140	2024-10-08	2025-10-07
7	DC Power Supply	Agilent	E3642A	N/A	2024-10-08	2025-10-07
8	EMI Test Software	AUDIX	E3	/	N/A	N/A
9	3m Semi Anechoic Chamber	SIDT FRANKONIA	SAC-3M	03CH03-HY	2024-06-06	2025-06-05
10	Positioning Controller	Max-Full	MF7802BS	MF780208586	N/A	N/A
11	Active Loop Antenna	SCHWARZBECK	FMZB 1519B	00005	2024-07-13	2027-07-12
12	By-log Antenna	SCHWARZBECK	VULB9163	9163-470	2024-08-03	2027-08-02
13	Horn Antenna	SCHWARZBECK	BBHA 9120D	9120D-1925	2024-07-13	2027-07-12
14	Broadband Horn Antenna	SCHWARZBECK	BBHA 9170	791	2024-07-13	2027-07-12
15	Broadband Preamplifier	SCHWARZBECK	BBV9719	9719-025	2024-07-30	2025-07-29
16	EMI Test Receiver	R&S	ESR 7	101181	2024-06-06	2025-06-05
17	RS SPECTRUM ANALYZER	R&S	FSP40	100503	2024-06-06	2025-06-05
18	Low-frequency amplifier	SchwarzZBECK	BBV9745	00253	2024-10-08	2025-10-07
19	High-frequency amplifier	JS Denki Pte	PA0118-43	JSPA21009	2024-10-08	2025-10-07
20	6dB Attenuator	/	100W/6dB	1172040	2024-06-06	2025-06-05
21	3dB Attenuator	/	2N-3dB	/	2024-10-08	2025-10-07
22	EMI Test Receiver	R&S	ESPI	101940	2024-06-06	2025-06-05
23	Artificial Mains	R&S	ENV216	101288	2024-06-06	2025-06-05
24	10dB Attenuator	SCHWARZBECK	MTS-IMP-136	261115-001-0032	2024-06-06	2025-06-05
25	EMI Test Software	Farad	EZ	/	N/A	N/A
26	Antenna Mast	Max-Full	MFA-515BSN	1308572	N/A	N/A
27	Pulse Limiter	R&S	ESH3-Z2	102750-NB	2024-06-06	2025-06-05

7. TEST SETUP PHOTOGRAPHS OF EUT

Please refer to separated files for Test Setup Photos of the EUT.

8. EXTERIOR PHOTOGRAPHS OF THE EUT

Please refer to separated files for External Photos of the EUT.

9. INTERIOR PHOTOGRAPHS OF THE EUT

Please refer to separated files for Internal Photos of the EUT.

----------THE END OF REPORT----------