Complete GENOMICS™
Powered by MGI

DNBSEQ-G800RS User Manual

For Research Use Only.
Complete Genomics, Inc.

About this manual

This manual is applicable to Genetic Sequencer (DNBSEQ-G800RS). The manual version is 1.0 and the software version is V1.

This manual and the information contained herein are proprietary to Complete Genomics, Inc. (hereinafter referred to as CG), and are intended solely for the contractual use of its customers in the use of the products described herein and for no other purpose. This manual and its content shall not be reprinted, reproduced, modified, distributed, or disclosed to others, in whole or in part, without prior written consent from CG.

CG makes no commitment to this manual, including (but not limited to) any special purpose commercial and any reasonable implied warranties. CG has taken measures to ensure the correctness of this manual. However, CG is not responsible for any missing parts of the manual, and reserves the right to revise the manual and modify the device, so as to improve the reliability, performance or design.

Figures in this manual are for illustrative purpose only. The content might be slightly different from the device. For the most up to date details, refer to the device purchased.

DNBSEQ™ is a trademark of CG or its affiliates in U.S. and/or other countries. Intel® and Xeon® are trademarks of Intel Corporation or its subsidiaries in the U.S. and/or other countries. Qubit™ is the trademark of Thermo Fisher Scientific, or its subsidiaries. ProClin™ is a trademark of the Dow Chemical Company (Dow) or an affiliated company of Dow. Other names and trademarks mentioned in this manual are the property of their respective companies and subsidiaries.

©2023 Complete Genomics, Inc. All rights reserved.

Revision history

	Date	Version
Initial release	March 15, 2023	1.0

Contents

Safety 1

Conventions used in this guide 2
General safety 2
Electrical safety 4
Mechanical safety 4
Components safety 4
Biological safety 5
Symbols 5
- Packaging 5
- Device 6
- Label 7
- User manual 8

Device overview 9

Intended use 10
Working principle 10
Sequencer overview 11
- Structural composition 11
- Basic components 12
- Control software 20

Laboratory requirements 27

Site requirements 28
Network requirements 29
Device requirements 30
Power supply requirements 31
Peripheral device requirements 32

Sequencing 33

Workflow 34
Preparing DNBs 34
Preparing the reagent cartridge and flow cell 35
Reagent cartridge and sequencing flow cell 35
Cleaning cartridge and washing flow cell 35
Preparing the device 35
Powering the device on 35
Logging in to the control software 36
Performing pre-run checks 36
Performing an auto wash 37
Loading the flow cell 37
Cleaning the flow cell satge 37
Loding new flow cell 37
Loading the sequencing reagent cartridge 39
Preparing the reagent cartridge compartment 39
Loding the reagent cartridge 40
Loading DNBs 40
Reviewing parameters 42
Performing sequencing run 42
Performing a regular wash 44
Disposing of the sequencing reagent cartridge and flow cell 44
(Optional) Powering the device off 45

Device maintenance 47

Service plan 48
Daily maintenance 48
Maintaining the power cord 48
Checking and cleaning the cooling fan 48

Flow cell stage and flow cell maintenance 49
Introduction of flow cell stage and flow cell 49
Cleaning the flow cell stage and flow cell 50
Cleaning sealing gasket 51

Sequencer maintenance 51
Wash 51
Weekly maintenance 56
Monthly maintenance 57
Annual maintenance 58

Maintaining the software 58
FAQs 58
Storage and transportation 60
Disposal of the device 60

Device specifications 61

Compliance information 63

Manufacturer information 65

Order information 67

Acronyms and abbreviations 69

Index 71

---This page is intentionally left blank.---

01

Safety

This chapter describes basic safety information about the device. Carefully read and understand the information before use to ensure correct operations, best performance, and personnel safety. Keep this guide at hand for reference at any time.

Conventions used in this guide

The following table describes conventions that are used in this guide:

Item	Description
shall	Means compliance with a requirement or it is mandatory for compliance with this document
should	Means compliance with a requirement but it is not mandatory for compliance with this document
may	Used to describe possibility or probability
can	Used to describe permission and capability
must	Used to express a constraint
Boldface	Indicates the printings and on-screen characters on the device

General safety

DANGER

- Ensure that the device is operated under the conditions specified in this guide. Otherwise, it may cause altered experimental results, device malfunction, or even personal injury.
- Ensure that the components of the device are completely installed before operation. Otherwise, it may cause in personal injury.
- A laser is installed in the device. Laser radiation can cause eye injury and skin burns. Before performing a sequencing run, ensure that the flow cell compartment door of the device is closed. Use of controls or adjustments or performance of procedures other than those specified herein may result in hazardous radiation exposure.
- Maintain the device by following the instructions described in this manual to ensure best performance. Otherwise, it might result in device malfunction or even personal injury.
- Do not operate the device in the presence of flammable or explosive liquids, vapors, or gases. Otherwise, it might result in device damage, or even personal injury.
- Do not operate the device during maintenance or transportation.

WARNING

- Only CG Technical Support or qualified and trained personnel can unpack, install, move, debug and maintain the device. Incorrect operations can cause altered experimental results or damage to the device.
- Do not move the device after CG Technical Support have installed and debugged the device. Unauthorized moves of the device can cause altered experimental results. If you require to move the device, contact CG Technical Support.
- Only trained personnel can operate the device.
- Do not disconnect the power cord when the device is on. Otherwise, it may result in device malfunction.
- Only the components provided by the manufacturer can be used for device maintenance. Unapproved components may degrade device performance or result in device malfunction.
- Do not reuse disposable items, except where noted in this manual.
- Do not place tubes or reagent kits on the device. Liquids seeping into the device may damage it.

CAUTION

- Only the peripheral devices and consumables specified by the manufacturer can be used.
- If you have maintenance questions that are not mentioned in this manual, contact CG Technical Support.
- The device has been inspected and validated before delivery. If serious deviation occurs during use, contact CG Technical Support for troubleshooting and calibration.
- Ensure that you are familiar with the operation of all the laboratory apparatus to be used.
- This sequencing reagent kit is for one sequencing run only and cannot be reused.
- The components and packages are batched separately. Keep the components in the packages until use and do not remove them. Mixed use of reagent components from different batches of kits is not recommended.

Electrical safety

DANGER

- Ensure that the device is properly grounded, and the grounding resistance meets the requirements. Failure to do so may result in altered experimental results, electrical leakage, or even electrical shock. If you have concerns about proper device grounding, please contact CG Technical Support.
- Do not remove the device cover and expose the inner components. Otherwise, electrical shock may be caused.

WARNING

Do not use the device in close proximity to sources of strong electromagnetic fields, such as unshielded sources of radiated emissions. Radiated signals might reduce the accuracy of the results.

CAUTION

- Before initial use of the device, assess the electromagnetic environment in which the device will be used. The electromagnetic environment should meet Federal Communications Commission-Part15A. For details, contact CG Technical Support.
- Ensure that the input voltage meets the device requirements.
- Ensure that the voltage of the power outlet in your laboratory or the UPS (uninterruptible power supply) (if any) meets the voltage requirements before using the device. Failure to do so might damage the electrical components.
- Prepare the laboratory and power supply according to the instructions described in this manual.

Mechanical safety

DANGER

To avoid device damage and personal injury, place the device on a level surface that meets the load-bearing requirements and ensure that the device cannot be easily moved.

Components safety

WARNING

- Only the software that has been provided by the manufacturer can be installed and used on the device. Other software may interfere with normal device functions, or even cause data loss.
- Do not uninstall the control software by yourself. If any problem occurs during software operation, contact CG Technical Support.
- If the fuse blew, replace the fuse with the specified type. For details, contact CG Technical Support.

CAUTION

Ensure that peripheral devices meet the requirements of IEC/EN 62368-1.

Biological safety

- Reagents and waste chemicals may cause personal injury through skin, eye, or mucosal contact. Follow the safety standards of your laboratory and wear protective equipment (such as a laboratory coat, protective glasses, mask, gloves, and shoe covers) when using the device.
- If you accidentally splash reagents or waste liquids on your skin or into your eyes, immediately flush the affected area with large amounts of water and seek medical aid immediately.
- When disposing of expired reagents, waste liquids, waste samples, and consumables, comply with local regulations.

WARNING

- Use and store the reagents according to the guide. Failure to do so may negatively impact performance.
- Check the expiration date of all reagents before use. Using expired reagents may cause inaccurate results.

Symbols

Packaging

The following table describes symbols on the packaging or on the label of the packaging:

Symbol	Name	Description
	This way up	Indicates the correct upright position of the crated until for transport and/or storage
	Fragile, handle with care	Indicates a device that can be broken or damaged if not handled carefully
	Keep dry	Indicates a device that needs to be protected from moisture

Symbol	Name	Description
	Do not stack	Indicates that stacking of the crated is not allowed and no item shall be placed on top during transport or storage
	Do not roll	Indicates that the crated shall not be rolled or turned over. It shall remain in the upright position at all times
	Temperature limit	Indicates the temperature limits to which the device can be safely exposed
	Humidity limitation	Indicates the range of humidity to which the device can be safely exposed
	Atmospheric pressure limitation	Indicates the range of atmospheric pressure to which the device can be safely exposed

Device

The following table describes symbols on the device:

Symbol	Name	Description
	General warning sign	Signifies a general warning
	Warning; biological hazard	Biological hazard warning
	Caution; hot surface	Indicates that the marked item can be hot and should not be touched without taking proper safety precautions
	Warning; dangerous voltage	Indicates hazards arising from dangerous voltages

Symbol	Name	Description
	Protective earth	Indicates the terminal of a protective earth (ground) electrode
	"ON" (power)	Indicates the main power supply is on
	"OFF" (power)	Indicates the main power supply is off
T16AH250V	Fuse specification	Indicates the fuse specification
	USB 3.0 port	USB connection
	Network port	Ethernet connection
WARNING-CLASS 3B LASER LIGHT WHEN OPEN AVOID EXPOSURE TO THE BEAM 注意——打开时有3B类激光辐射 避免光束照射	Warning; laser beam	Indicates a laser beam hazard.

Label

The following table describes symbols on the labels of the device or reagent kit:

Symbol	Name	Description
Research Use Only	/	Indicates a device that is for research use only, and cannot be used for clinical diagnosis
#	Model number	Indicates the model number or type number of a product
	Manufacturer	Indicates the name and address of the device manufacturer
	Date of manufacture	Indicates the date when the device was manufactured
	Consult instructions for use	Indicates the need for the user to consult the instructions for use

Symbol	Name	Description
	WEEE symbol	Indicates that waste electrical and electronic equipment must not be disposed of as unsorted muni c ipal waste and must be collected separately. Please contact an authorized representative of the manufacturer for information concerning the decommissioning of your equipment.

User manual

The following table describes symbols that are used in this user manual:

Symbol	Description
DANGER	Indicates that the operator should operate the device according to the instructions in this manual Otherwise, it will result in death or serious injury
WARNING	Indicates that the operator should operate the device by following the instructions. Otherwise, it might result in death or serious injury
CAUTION	Indicates that the operator should operate the device by following the instructions. Otherwise, it might result in minor or moderate injury
	Indicates that the operator should pay special attention to the note information, and operate the device by following the instructions
	Indicates biological risk. The operator should operate the device by following the instructions

02

Device overview

This chapter describes the intended use, working principle, and structural composition of the device.

Intended use

This device is a sequencing instrument that measures optical and electronic signals of the reporting molecules, which decode the sequence information of a DNA or RNA fragment. This is accomplished through the use of instrument specific reagents, flow cells, imaging hardware, and data analysis software. The sequencing input is intended to be prepared as DNA Nanoball (DNB) libraries, which can be used for whole genome, whole exosome and de novo sequencing.

WARNING This device is intended only for scientific research and should not be used for clinical diagnosis.

Working principle

The device adopts the advanced DNA Nanoball (DNB) and the core technology of combinatorial probe-anchor synthesis (cPAS). It uses a regular, arrayed flow cell with special surface sites. Each of the sites contains a single DNB, which are evenly arrayed across the flow cell, ensuring that the optical signals of nearby Nanoballs cannot be interrupted by each other. This improves the accuracy of signal processing.

The following figure demonstrates how to make DNBs:

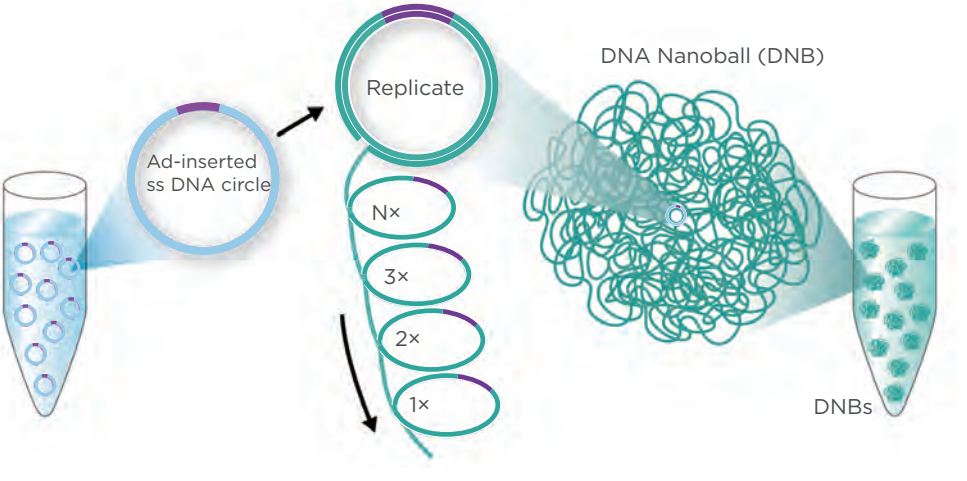

Figure 1 Making DNBs

The following figure demonstrates how to load DNBs:

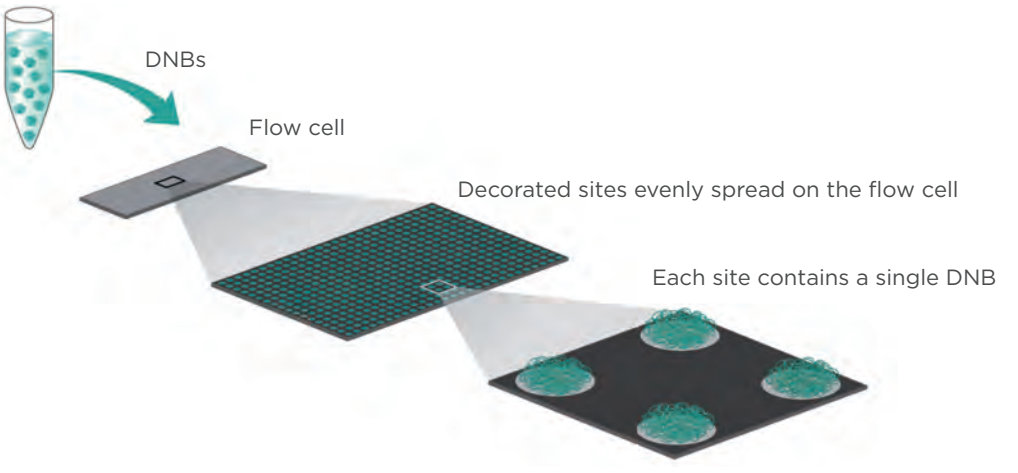

Figure 2 Loading DNBs

The DNBs and sequencing reagents are pumped into the sequencing flow cell through the device's liquid delivery system. Each DNB combines with the respective fluorescence group. The laser excites the fluorescence group to emit light, and the optical signals are acquired by the camera. The optical signals are converted to digital intensities and processed by the computer to determine the nucleotide sequence of the DNB.

Sequencer overview

Structural composition

The device consists of the main unit and pre-installed control software (software version: V1). The main unit includes the main structure, host, optical system, XYZT-stage, flow cell stage, gas-liquid system, electric control system, reagent storage system, power supply system and display system.

The following table describes the function of each component:

Component	Description
Main structure	Provides stable support for the main unit.
Host	Controls the device, collects, analyzes, and stores data.
Optical system	Images the fluorescence signal on the flow cell.
XYZT-stage	Moves the flow cell and focuses automatically.

Component	Description
Flow cell stage	Connects the flow cell to fluidics lines and controls the temperature of the flow cell.
Gas-liquid system	Provides the gas-liquid support that is required for the biochemical reaction.
Electric control system	Controls the electric system.
Reagent storage system	Provides the reagent storage environment.
Power supply system	Provides the power supply for the device.
Display system	Provides the human-computer interaction interface.

Basic components

Front view

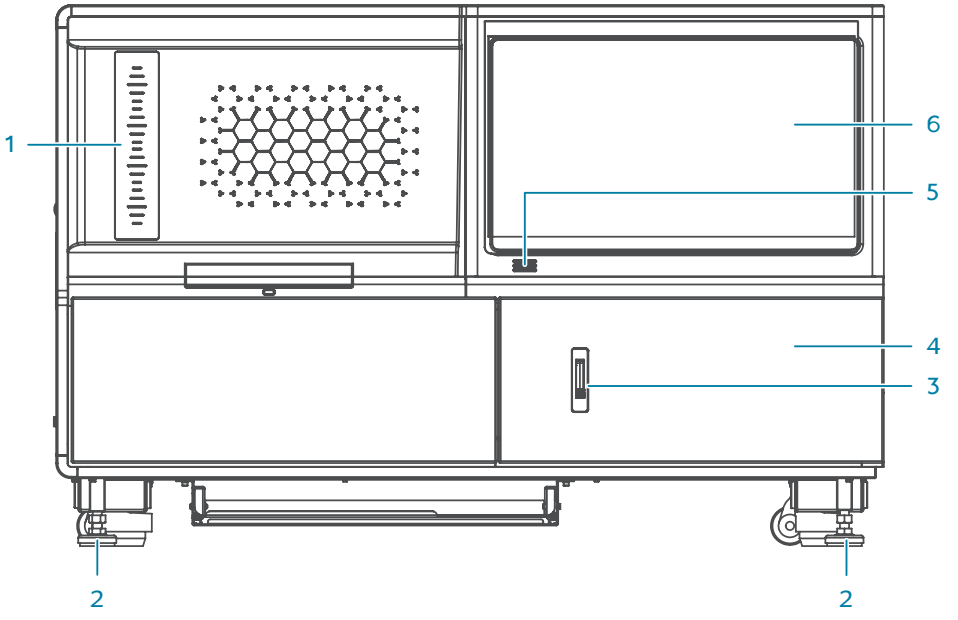

Figure 3 Front view

No.	Name	Description
1	Status indicator	Displays the current status of the device: • Green: the device is running. • Blue: the device is in standby status. • Yellow: a warning appears, but the device keeps running. • Red: an error occurred.
2	Supporting feet	Supports the main unit to ensure stability.
3	Latch of the reagent compartment	Press the button on the latch, and pull the pop-up ring to open the reagent compartment door.
4	Reagent compartment	Holds the reagent cartridge and tube at appropriate temperatures.
5	Buzzer	Alerts when warnings appear, or errors occur.
6	Touch screen monitor	Facilitates on-screen operation and displays information.

Back view

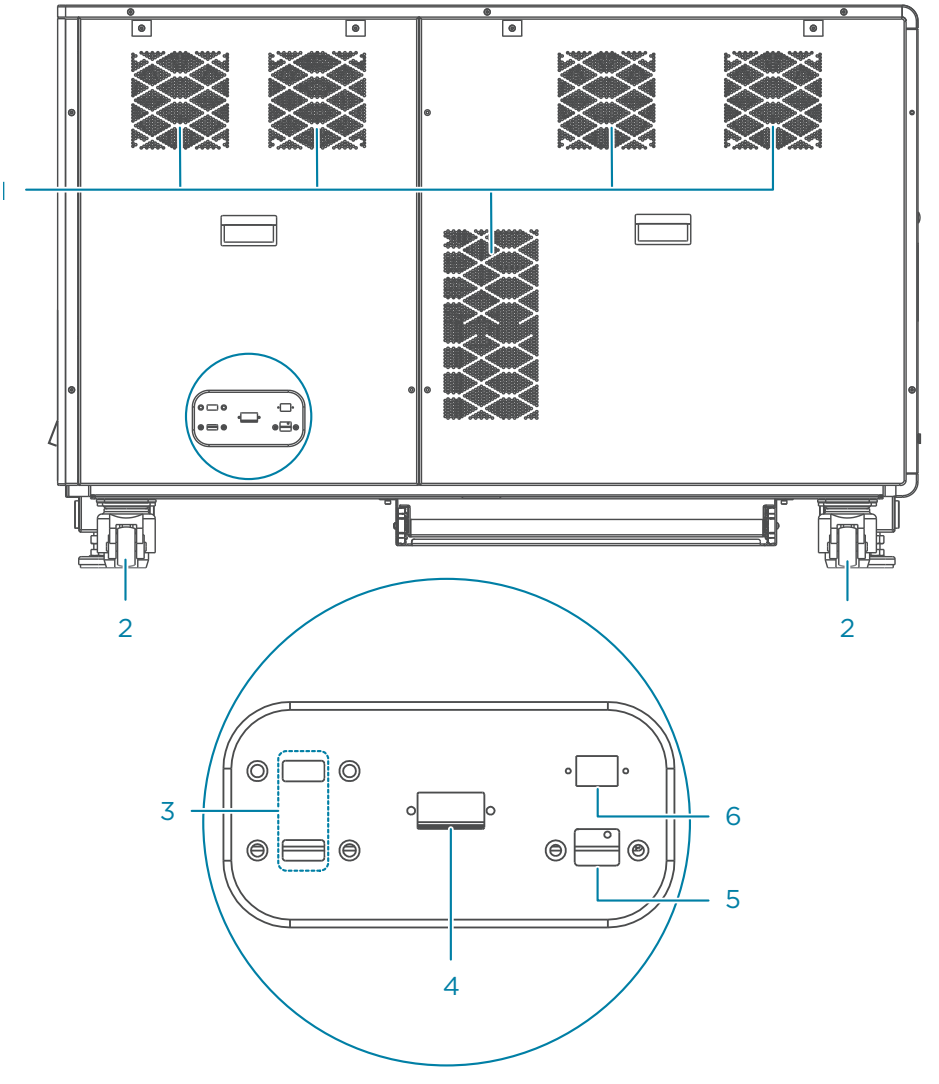

Figure 4 Back view

No.	Name	Description
1	Ventilation outlet	Ventilates the device.
2	Wheel	Used for moving the device.
3	USB 3.0 port	Used to connect to USB devices such as the keyboard, mouse, and scanner.
4	UPS port	Used to connect to the UPS power supply.
5	Network port	Reserved for future use.

No.	Name	Description
6	Network port	Used to connect to the network.

Left view

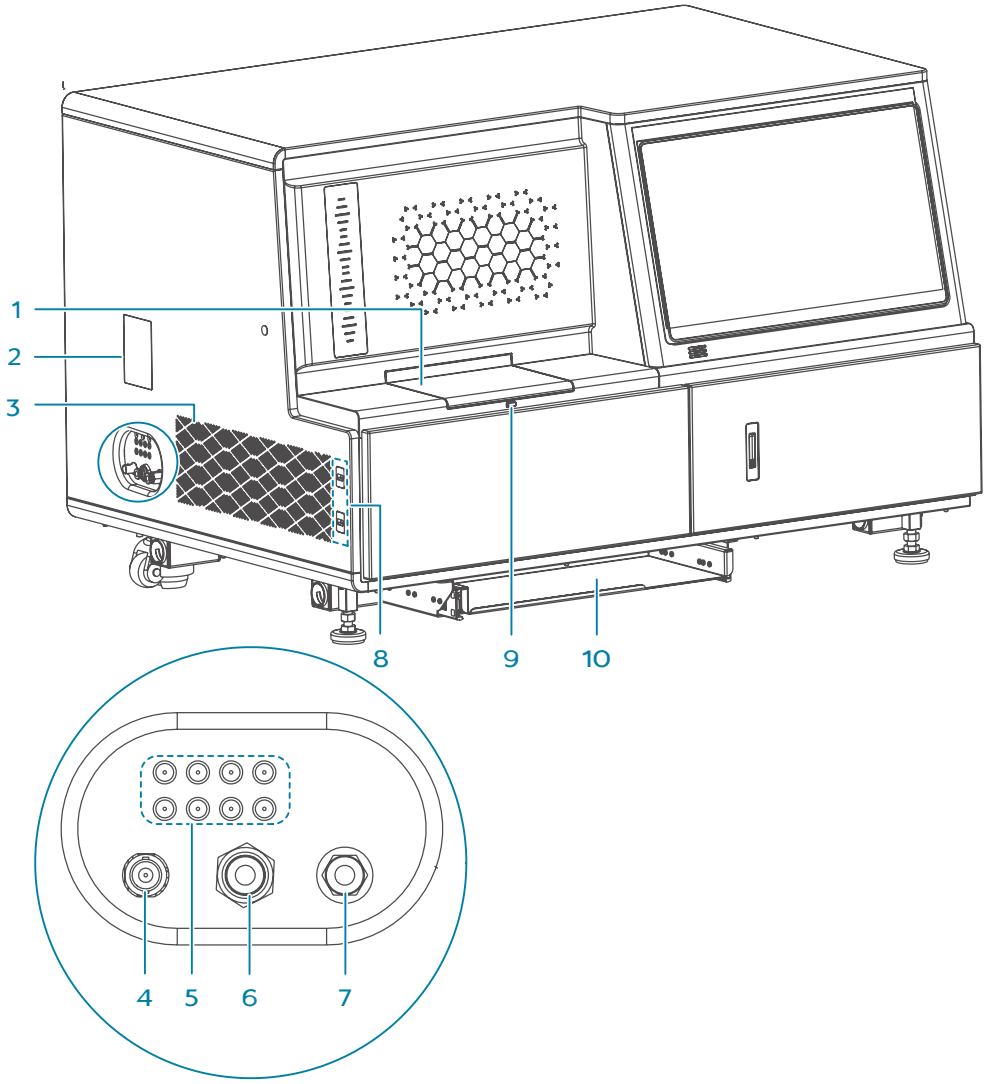

Figure 5 Left view

No.	Name	Description
1	Flow cell compartment	Holds flow cells and controls the temperature for biochemical reactions.

No.	Name	Description
2	Window	Used to observe the status of the fluidics system and negative pressure gauge through the window.
3	Ventilation inlet	Exhausts air from the device.
4	Level sensor port	Connects the waste level sensor in the waste container.
5	External cleaning module port	Connects the device to external cleaning module.
6	Condensed water port	Connects the condenser tube to dispense the condensed water that is produced by the cooling system to the waste container.
7	Waste port	Connects the waste tube to dispense the waste to the waste container.
8	USB 3.0 port	Used to connect to portable devices.
9	Button of the flow cell compartment door	Press to open the flow cell compartment door.
10	Keyboard drawer	Holds the keyboard and mouse.

Right view

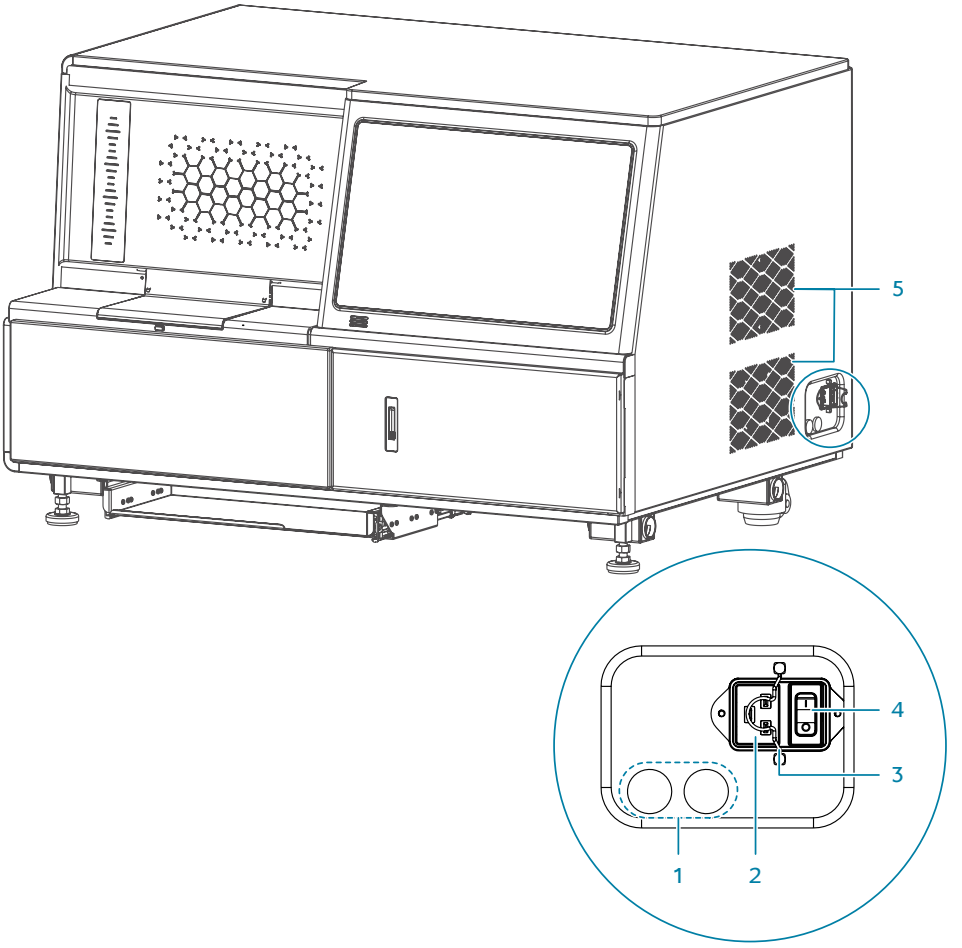

Figure 6 Right view

No.	Name	Description
1	Fuse seat	Used to install fuses.
2	Power supply port	Connects the device to the power supply.
3	Power cord hook	Prevent power cord from moving.
4	Power switch	Powers the device on or off. • Switch to the | position to power the device on. • Switch to the ◯ position to power the device off.
5	Ventilation inlet	Ventilates the device.

Flow cell compartment

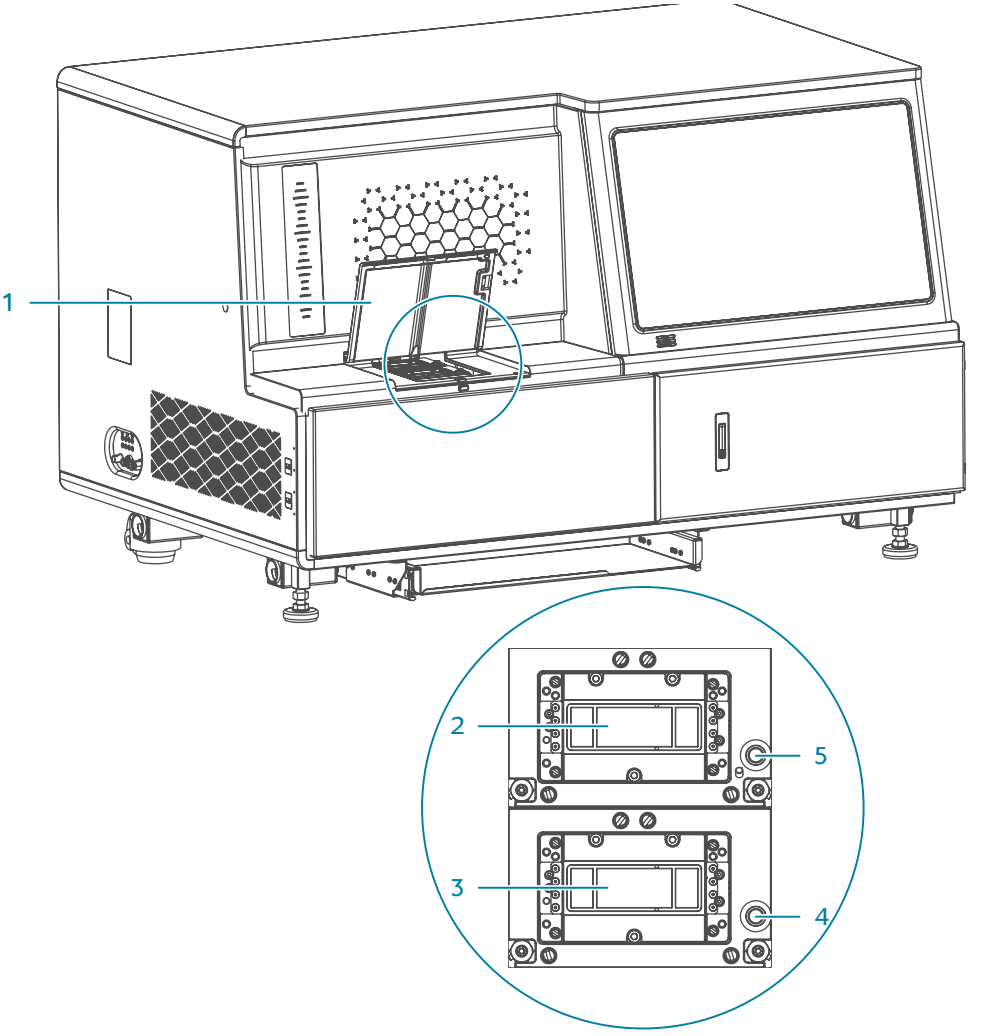

Figure 7 Flow cell compartment

No.	Name	Description
1	Flow cell compartment door	Press the button of the flow cell compartment door to open the door.
2	Flow cell stage B	Holds, moves the flow cell B, and controls the temperature that is required for biochemical reaction.
3	Flow cell stage A	Holds, moves the flow cell A, and controls the temperature that is required for biochemical reaction.

No.	Name	Description
4	Flow cell attachment button A	Press to activate the vacuum for attachment or release of the flow cell A.
5	Flow cell attachment button B	Press to activate the vacuum for attachment or release of the flow cell B.

Reagent compartment

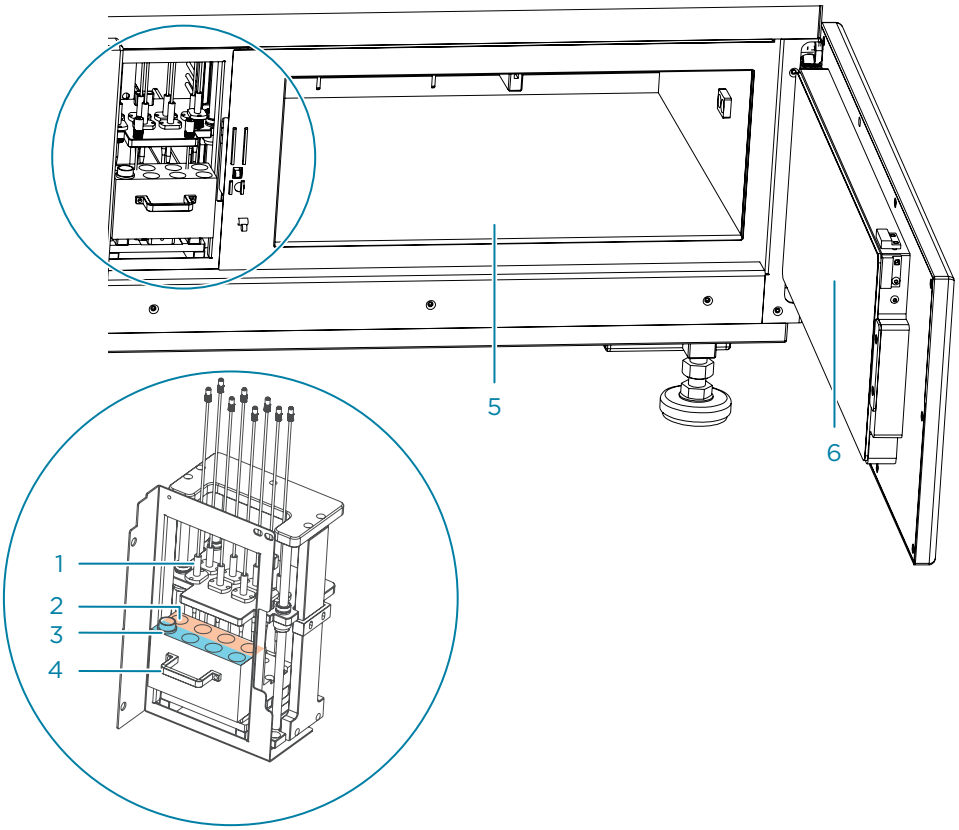

Figure 8 Reagent compartment

No.	Name	Description
1	DNB needles	Aspirates DNBs from the DNB tube.
2	DNB tube B rack	Holds DNB tube B.
3	DNB tube A rack	Holds DNB tube A.
4	Handle	Used to pull out the tube rack.

No.	Name	Description
5	Reagent compartment	Holds the reagent cartridge at appropriate temperatures: • Reagent cartridge A is placed on the left. It provides the required reaction mixture for flow cell A. • Reagent cartridge B is placed on the right. It provides the required reaction mixture for flow cell B.
6	Reagent compartment door	You can press the button on the latch of the door, and pull the pop-up ring to open the door.

Control software

Overview

The system control software initiates the communication protocol through physical ports to coordinate with the hardware, control gas lines, fluidics lines, temperature control, mechanical and optical components. The software detects the signal on the sequencing flow cell, transfers the photographic information to the base sequence files in standard format, and guides users in performing various processes on the device, such as maintenance and experimental protocols.

The following table describes the function of each functional module:

Item	Description
Self-test	Checks whether the components of the system are functional.
Sequence	Performs different types of sequencing processes.
Wash	Performs wash and maintenance for fluidics lines of the system.
Software running	Monitors the components status of the system.

Self-test

After you power the device on and log in to the computer with the password that is provided by the manufacturer, the self-test starts.If the self-test succeeds, the main interface appears as *Figure 9 Main interface on Page 21.*

If the self-test fails, perform the following steps:

1. In the main interface, select , and select **Library** to check the detailed self-test results that are recorded in the library.
2. Follow the on-screen instructions.
3. Perform the self-test again:
   - Select , select **Maintenance > Self-test**.
   - Select **> Restart**.

   If the problems persist, contact CG Technical Support for help.

Main interface

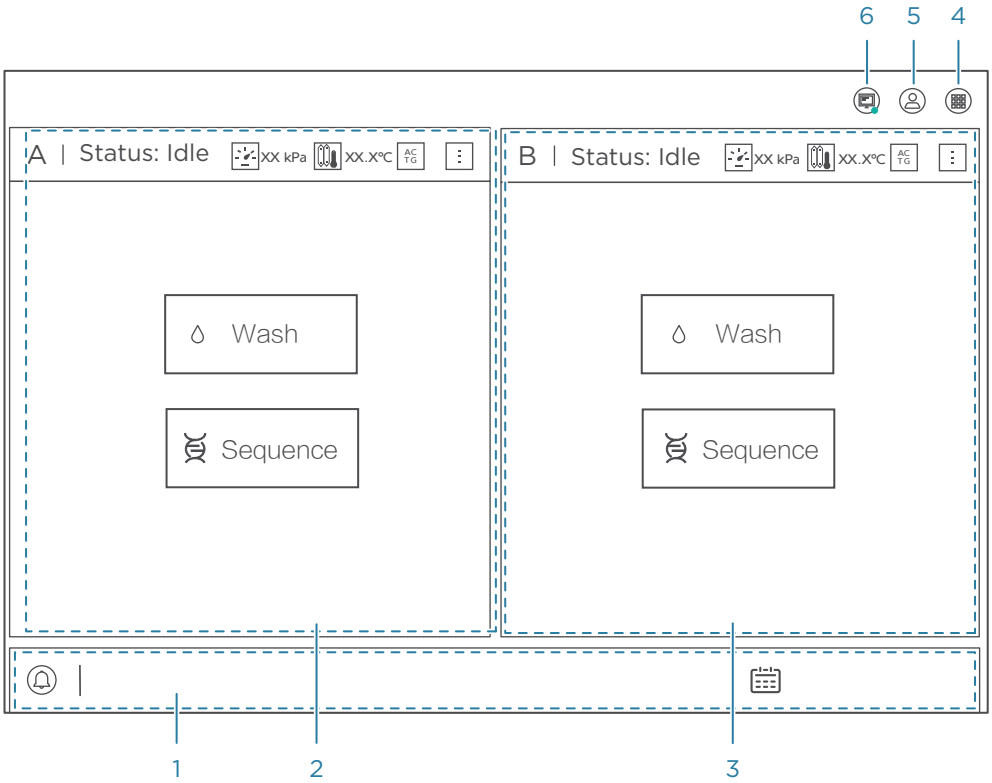

Figure 9 Main interface

The following table describes the function of each area or button in the main interface:

No.	Name	Description
1	Notification area	Indicates warnings, errors, date, and time.
2	Flow cell A operation area	Indicates the status of flow cell A and provides wash and sequence options.
3	Flow cell B operation area	Indicates the status of flow cell B and provides wash and sequence options.
4	Menu button	Select to view the logs, change settings, perform maintenance, lock screen, shut down or restart the system, or check the system information.
5	Login button	Select to log in to the system.
6	Status area	Indicates the status of critical components of the device.

Notification area

The following table describes the function of icons or information in the area:

Item	Description
	The prompt icon includes the following status: • Blue: the device is operating normally. • Yellow and flash: a warning appears. • Red and flash: an error occurs. General information, warnings, or error messages are displayed on the right of the icon.
	Displays the date.

Operation area

The following table describes the function of icons and buttons in the area:

Item	Description
A/B	Operation area of flow cell A or B.
Status	System status.
	Temperature of the flow cell stage is normal.
	Temperature of the flow cell stage is beyond the normal range.

Item	Description
	Negative pressure is normal.
	Negative pressure is beyond the normal range.
	Basecalling is connected.
	Errors occur in the basecalling connection.
	The basecall software is processing image data. This icon is dynamic.
	Select to view more status icons.
	Fluidics pressure.
Wash	Select to set the wash type, and perform the relevant operations by following the on-screen instructions. For details, refer to *Wash on Page 51* .
Sequence	Select to set sequencing parameters, and perform a sequencing run by following the on-screen instructions. For details, refer to *Sequencing on Page 33* .

Status area

The following table describes the function of icons in the area:

Item	Description
	Device is running independently. No needs to connect to ZLIMS software.
	This device is disconnected from ZLIMS software.
	This device is connected from ZLIMS software.
	Indicates the status of waste level. If errors occur, contact CG Technical Support.
	Indicates the status of drive space.

Item	Description
	Indicates the temperature of device. Real-time temperature appears on the left of the icon.
	Indicates the temperature of reagent cartridge. Real-time temperature appears on the left of the icon.
	Indicates the humidity of device. Real-time humidility appears on the left of the icon.

Log interface

You can view the log in this interface.

To open the log interface, select in the main interface, and select **Log**.

The following table describes the function of controls in the interface:

Item	Description
Back	Select to exit the log interface and return to the previous interface.
All	Select to view all types of logs.
Info	Select to view information-type logs.
Warning	Select to view warning-type logs.
Error	Select to view error-type logs.
⌄	Select the date in the pop-up calendar.
Flow Cell	Select the check box to view the logs of flow cell A or B, or both.
<	Select to return to the previous page of logs.
x/x	Displays the current page and the total page of logs.
>	Select to turn to the next page of logs.

System settings interface

You can change system settings in this interface.

To open the system settings interface, perform the following steps:

1. Log in to your account. For details, refer to *Logging in to the control software on Page 36.*
2. Select and select **Settings**.

The following table describes the function of controls in the interface:

Item	Description
Back	Select to exit the system settings interface and return to the previous interface.
Language	Select to change the language of the software. Restart the device to apply the changes.
Network	Select to set up the linking address of ZLIMS software.
Upload	Select **Upload enabled** to upload the data to the specified server.
Customize	• Select to change the screen timeout before the screen locks automatically. • Move the slider to change the volume of the buzzer.
FASTQ	Select to set parameters of FASTQ.

Maintenance interface

You can maintain the device, import or export the data, and import barcode files in this interface.

To open the system maintenance interface, perform the following steps:

1. Log in to your account.
2. Select and select **Maintenance**.

The following table describes the function of controls in the interface:

Item		Description
Back		Select to exit the system maintenance interface and return to the previous interface.
Device maintenance	**Empty fluidics line**	Select to discharge the residual liquid in all fluidics lines to the waste container. The fluidics line that is being emptied is highlighted.
	Self-test	Select to perform a self-test for the hardware of the device. The result of each item is displayed in the interface. After self-test, you will be prompted that the self-test is successful.
	Clear history data	Select to clear all history data of sequencing runs, except for the data of the most recent run.

Item		Description
Export data		• Select a data type and export the data to the specified directory of the external storage device. • Select **Uploading data** and upload the data to the specified server.
Script setting		Select to export scripts to the external storage device or import scripts from the external storage device.
Barcode settings	**Import barcode**	Import the barcode file that is saved in the external storage server or hard drive to the device.
	Export barcode templates	Export the barcode templates that is saved in the device to external storage server or hard drive.
User management		Select to add a new account, delete an account, reset the password or modify account information.
Device Lifecycle		Select to view recommended using times and lifecycle of main components.

Lock screen interface

You can lock the screen to prevent user from operating in the interface.

To open the screen lock interface, select > **Lock screen**, and select **Yes** when you are prompted.

Shutdown or restart interface

You can shut down or restart the system in the interface.

To open the shutdown or restart interface, perform one of the following steps:

- Select > **Shut down**, and select **Yes** when you are prompted.
- Select > **Restart**, and select **Yes** when you are prompted.

About interface

You can view basic information of the device in this interface, such as the release version, full version of control software, and serial number of the device.

To open the About interface, select and select **About**.

03

Laboratory requirements

This chapter describes the requirements for the laboratory, the network, the power supply and so on.

Site requirements

DANGER

- Ensure that the laboratory floor is level and with a gradient of less than 1/200.
- Ensure that the laboratory is free of dust, corrosive and flammable gas, and heat and wind sour.
- It is recommended that you use a clean laboratory with ISO Class 10 air cleanliness.

CAUTION

- Ensure that the laboratory is away from direct sunlight and is well ventilated. We recommend that you refer to the standard of a biosafety level (BSL) 2 laboratories.
- Ensure that enough space is provided for related peripheral devices.
- Ensure that enough space is provided around the device for ventilation, cable connection, and power switch operation.

The following figure indicates distances that are required for optimal operation and access.

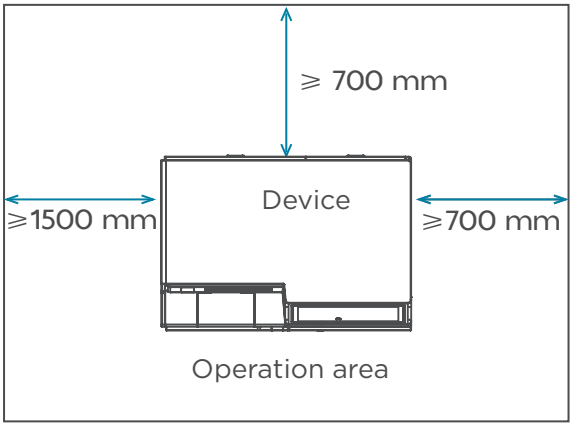

Figure 10 Site requirements

Network requirements

WARNING

- If necessary, contact the technical support to obtain or change the user name and password of the computer and the device.
- The control software provides two different types of user accounts. For detailed access authorization, contact the technical support. The rules for managing the device account are set by the agents who use the device. Please conform to the rules of your agents when using the device.
- Only the software that has been provided by the manufacturer can be installed and used on the computer, because unknown software might interfere with normal device functions, or even cause data loss.
- Do not uninstall the control software by yourself. If any problem occurs during software operation, contact the technical support.
- Considering the information security, we do not recommend that you connect the extranet to the device. If you need to upload the data to the server, contact the technical support in advance and ask the network administrators of your agents to configure the network, so as to reduce the risk to network security.

CAUTION

- To protect the data, please change the password when you log into the device for the first time, and change the password regularly.
- To protect the data, it is recommended that you enable the function of synchronously uploading the data from the device to the server after connecting the device to the server.
- The logs system does not record data deletion or revision through Windows. Please ensure that you have backed up the data before deletion or revision.

Item		Description
Operating environments of the computer	Minimum configuration	Processor: Intel Xeon Gold 5318Y @ 2. 10 GHz X 2
	Software environments	Pre-installed software on the computer includes: • Microsoft Windows10 64-bit operating system • Microsoft .Net Framework 4.6.1 and above • Control software
	Network conditions	• Network architecture: C/S • Network type: local network • Network bandwidth: no less than 1 Gbit/s

Item	Description
Software security	We have pre-installed the antivirus software. If you need to upgrade the antivirus software, contact the technical support in advance.
Data and device port	• Network ports: connect to the network. • USB type A ports: connect to the scanner. • USB ports: connect to external USB devices, such as the keyboard, mouse and scanner, or for future use.
Access control	User types of the control software include common user and advanced user. For detailed access authorization, contact the technical support.

Device requirements

CAUTION

- Only the technical support of the manufacturer or trained personnel can unpack the device. Contact the technical support to unpack and install the device upon delivery. Failure to do so will void the warranty.
- Ensure that the outer package is intact and the indicator status of the anti-shock and anti-tilt label is normal upon delivery. If any problem occurs, contact the technical support.
- To ensure that the performance of the device meets the specifications, the technical support will perform a standard sequencing before customer training and use.

The following table describes indicator status on the label:

Label	Indicator status	Description
Anti-shock label	Remains unaffected	Indicates that the device is intact and no strong collision occurs during transportation, or the intensity does not exceed the limit.
	Red	Indicates that the device might not be intact and that a strong collision occurs during transportation and the intensity exceeds the limit.
Anti-tilt label	Remains unaffected	Indicates that no tilt occurs, or the gradient does not exceed the limit.
	Red	Indicates that tilt occurs, and the gradient exceeds the limit.

Power supply requirements

WARNING

- It is recommended that you use the power cord provided by the manufacturer to connect to the power supply, and the power cord can be only used with this device. Failure to do so might damage the power cord or device.
- The mains socket-outlet should be a standard three-prong socket and its protective grounding terminal should be connected to the protective grounding cable of the power supply system. If the requirements above are not met, the device must be protectively grounded as described in the following table.
- Ensure that the grounding cable is connected in accordance with the relevant standard or under the guidance of the experienced electrician.
- Ensure that the power switch is in the off position before connecting to the power supply.
- Check whether the power socket matches the power cord. If not, check for available adapters.

CAUTION

To ensure a steady and uninterruptible power supply to the device during operation, it is recommended to use a separate UPS. For details about the UPS installation protocol, contact the technical support or the UPS supplier.

Item	Description
Supply voltage and frequency	100 V-240 V~ , 50/60 Hz
Voltage fluctuation	± 10%

Item	Description
Rated power	1200 VA, the available current should be not less than 16 A.
Transient over-voltage category	II
Grounding resistance	< 4 Ω

Peripheral device requirements

Before using the device, prepare the following peripheral items:

Device	Recommended suppliers	Remarks
Auto sample loader or portable loader	Manufacturer	For detailed instructions on the auto sample loader or loader, see relevant user manual.
Library preparation system	Manufacturer	/
Ultra-pure water machine	General laboratory supplier	/
Frost-free freezer or refrigerator	General laboratory supplier	Temperature ranges (according to requirements): • 2 °C to 8 °C (36 °F to 46 °F) • -25 °C to -18 °C (-13 °F to -0.4 °F) • -70 °C and below (-94 °F and below)

04

Sequencing

This chapter describes the sequencing workflow, sequencing and analysis, and post-sequencing procedures by using the flow cell A operation area as an example. Read and follow the instructions to ensure correct operations.